NEW YORK STATE DEPARTMENT OF ENVIRONMENTAL CONSERVATION

Division of Environmental Remediation, Region 8
6274 East Avon-Lima Road, Avon, NY 14414-9516
P: (585) 226-5353 I F: (585) 226-8139
www.dec.ny.gov

June 12, 2018

Genesee Valley Real Estate Co., LLC
Mr. Dante Gullace, Member
160 Despatch Drive
East Rochester, NY 14445

Dear Mr. Gullace:

Subject: **690 St. Paul Street, Site #C828159**
Site Management Plan; October 30, 2017
City of Rochester, Monroe County

The New York State Departments of Environmental Conservation (NYSDEC) and Health, collectively referred to as the Departments, have completed their review of the document entitled *Site Management Plan* (the Work Plan) dated October 30, 2017 for the 690 Saint Paul Street site located in the City of Rochester. Based on this review, the Departments have determined that the Work Plan does not substantially address the requirements of the Brownfield Cleanup Agreement. In accordance with 6 NYCRR 375-1.6, the Work Plan is hereby disapproved.

The most significant deficiencies associated with the Work Plan are:

1. The Work Plan does not adequately address all of the comments provided in the Department's letter of September 28, 2017. Specific comments that were not adequately addressed are summarized below:

    - The Work Plan does not include the following requested language from remedial element #6 of the Decision Document: "*Actions are required to reduce the indoor air levels of site-related contaminants of concern in any buildings which are occupied at the site to within background levels. Actions may include, but are not limited to, the installation of additional sub-slab depressurization systems, indoor air quality monitoring, and further assessment of the sources of COCs in the indoor air. Provisions are also required to document the effectiveness of the actions and that the actions remain protective until they are no longer needed."*

      To be consistent with the Decision Document, please incorporate this language into the Engineering Controls section of the Work Plan rather than the

Institutional Controls section as was requested in the September 28, 2017 letter.

- The Work Plan does not include the Department's request to include wells MW-9 and MW-10 in the groundwater monitoring program.

- The Work Plan does not include the Department's request to include groundwater monitoring from two AOC #6 LNAPL monitoring wells and downgradient wells MW-11 and BW-3. The Department agrees that groundwater samples do not need to be collected from wells containing LNAPL. However, during each LNAPL monitoring event there are typically several wells that do not contain LNAPL and could be sampled.

The above comments represent previously requested modifications for which the Applicant did not request dispute resolution. As such, dispute resolution is no longer available for these items.

2. The Work Plan needs to be updated to reflect the status of the groundwater pump and treat system.

3. NYSDEC is undertaking a statewide evaluation of remediation sites to better understand the risk posed to New Yorkers by 1,4-dioxane and per- and polyfluoroalkyl substances (PFAS). PFAS have historically not been evaluated at remediation sites, and 1,4-dioxane has not been evaluated at the levels that are now thought to represent a health concern. This initiative is being undertaken as a result of these "emerging contaminants" having been found in a number of drinking water supplies in New York. Accordingly, NYSDEC is requiring that you test site groundwater for these chemicals. To accommodate this requirement, a select number of monitoring wells, representative of the potential of the above-referenced site to be a source of these emerging contaminants, must be sampled. NYSDEC recommends that at least one of these wells should be upgradient of the site. The attached guidance (attachment 1) provides information on the analytical methods and reporting requirements. A second guidance document describes special precautions that need to be considered when sampling for PFAS. Please incorporate the 1,4-dioxane and PFAS groundwater sampling into the revised Work Plan. Include the identity of the wells proposed for emerging contaminant sampling, a brief description of the sampling and analytical methods, and the identity of the selected laboratory. The results of the initial sampling event will be evaluated to determine what, if any, additional action is needed.

4. Additional comments are attached (attachment 2) to the electronic copy of this letter in the form of comments embedded within the Work Plan.

The attached comments are not necessarily a complete list of concerns with the document.

Per 6 NYCRR Part 375-1.6, please notify me in writing by **July 2, 2018** which of the following options you will choose to address these comments:

- modify the Work Plan to address the Departments' comments and submit a revised Work Plan by **July 17, 2018;**
- invoke dispute resolution; or
- terminate the Brownfield Cleanup Agreement.

NYSDEC seeks to resolve outstanding differences in a mutually agreeable manner which addresses the requirements of the Brownfield Cleanup Agreement, Part 375, and all applicable laws, regulations and guidance. As such, please contact me at (585) 226-5357 prior to **July 2, 2018** to informally discuss any questions or concerns regarding these comments.

Sincerely,



Frank Sowers, P.E.
Professional Engineer 1

Attach:
1. Emerging Contaminant Guidance
2. Additional Comments (electronic only)

ec: w/attach

Eamonn O'Neil	Justin Deming
Stacie Darbey	Dennis Harkawik
Dan Noll	Bernette Schilling
Greg Senecal	Wade Silkworth
John Frazer	

ATTACHMENT 1
EMERGING CONTAMINANT GUIDANCE

Groundwater Sampling for Emerging Contaminants

April 2018

Issue: NYSDEC has committed to analyzing representative groundwater samples at remediation sites for emerging contaminants (1,4-dioxane and PFAS) as described in the below guidance.

Implementation

NYSDEC project managers will be contacting site owners to schedule sampling for these chemicals. Only groundwater sampling is required. The number of samples required will be similar to the number of samples where "full TAL/TCL sampling" would typically be required in a remedial investigation. If sampling is not feasible (e.g., the site no longer has any monitoring wells in place), sampling may be waived on a site-specific basis after first considering potential sources of these chemicals and whether there are water supplies nearby.

Upon a new site being brought into any program (i.e., SSF, BCP), PFAS and 1,4-dioxane will be incorporated into the investigation of groundwater as part of the standard "full TAL/TCL" sampling. Until an SCO is established for PFAS, soil samples do not need to be analyzed for PFAS unless groundwater contamination is detected. Separate guidance will be developed to address sites where emerging contaminants are found in the groundwater. The analysis currently performed for SVOCs in soil is adequate for evaluation of 1,4-dioxane, which already has an established SCO.

Analysis and Reporting

Labs should provide a full category B deliverable, and a DUSR should be prepared by a data validator, and the electronic data submission should meet the requirements provided at: https://www.dec.ny.gov/chemical/62440.html ,

The work plan should explicitly describe analysis and reporting requirements.

PFAS sample analysis: Currently, ELAP does not offer certification for PFAS compounds in matrices other than finished drinking water. However, laboratories analyzing environmental samples (ex. soil, sediments, and groundwater) are required, by DER, to hold ELAP certification for PFOA and PFOS in drinking water by EPA Method 537 or ISO 25101.

Modified EPA Method 537 is the preferred method to use for groundwater samples due to the ability to achieve 2 ng/L (ppt) detection limits. If contract labs or work plans submitted by responsible parties indicate that they are not able to achieve similar reporting limits, the project manager should discuss this with a DER chemist. Note: Reporting limits for PFOA and PFOS should not exceed 2 ng/L.

PFAS sample reporting: DER has developed a PFAS target analyte list (below) with the intent of achieving reporting consistency between labs for commonly reportable analytes. It is expected that reported results for PFAS will include, at a minimum, all the compounds listed. This list may be updated in the future as new information is learned and as labs develop new capabilities. If lab and/or matrix specific issues are encountered for any particular compounds, the NYSDEC project manager will make case-by-case decisions as to whether particular analytes may be temporarily or permanently discontinued from analysis for each site. Any technical lab issues should be brought to the attention of a NYSDEC chemist.

Some sampling using this full PFAS target analyte list is needed to understand the nature of contamination. It may also be critical to differentiate PFAS compounds associated with a site from other

sources of these chemicals. Like routine refinements to parameter lists based on investigative findings, the full PFAS target analyte list may not be needed for all sampling intended to define the extent of contamination. Project managers may approve a shorter analyte list (e.g., just the UCMR3 list) for some reporting on a case by case basis.

1,4-Dioxane Analysis and Reporting: The method detection limit (MDL) for 1,4-dioxane should be no higher than 0.28 µg/l (ppb). ELAP offers certification for both EPA Methods 8260 and 8270. In order to get the appropriate detection limits, the lab would need to run either of these methods in "selective ion monitoring" (SIM) mode. DER is advising the use of method 8270, since this method provides a more robust extraction procedure, uses a larger sample volume, and is less vulnerable to interference from chlorinated solvents (we acknowledge that 8260 has been shown to have a higher recovery in some studies).

Full PFAS Target Analyte List

Group	Chemical Name	Abbreviation	CAS Number
Perfluoroalkyl sulfonates	**Perfluorobutanesulfonic acid**	**PFBS**	**375-73-5**
	Perfluorohexanesulfonic acid	**PFHxS**	**355-46-4**
	Perfluoroheptanesulfonic acid	PFHpS	375-92-8
	Perfluorooctanessulfonic acid	**PFOS**	**1763-23-1**
	Perfluorodecanesulfonic acid	PFDS	335-77-3
Perfluoroalkyl carboxylates	Perfluorobutanoic acid	PFBA	375-22-4
	Perfluoropentanoic acid	PFPeA	2706-90-3
	Perfluorohexanoic acid	PFHxA	307-24-4
	Perfluoroheptanoic acid	**PFHpA**	**375-85-9**
	Perfluorooctanoic acid	**PFOA**	**335-67-1**
	Perfluorononanoic acid	**PFNA**	**375-95-1**
	Perfluorodecanoic acid	PFDA	335-76-2
	Perfluoroundecanoic acid	PFUA/PFUdA	2058-94-8
	Perfluorododecanoic acid	PFDoA	307-55-1
	Perfluorotridecanoic acid	PFTriA/PFTrDA	72629-94-8
	Perfluorotetradecanoic acid	PFTA/PFTeDA	376-06-7
Fluorinated Telomer Sulfonates	6:2 Fluorotelomer sulfonate	6:2 FTS	27619-97-2
	8:2 Fluorotelomer sulfonate	8:2 FTS	39108-34-4
Perfluorooctane-sulfonamides	Perfluroroctanesulfonamide	FOSA	754-91-6
Perfluorooctane-sulfonamidoacetic acids	N-methyl perfluorooctanesulfonamidoacetic acid	N-MeFOSAA	2355-31-9
	N-ethyl perfluorooctanesulfonamidoacetic acid	N-EtFOSAA	2991-50-6

Bold entries depict the 6 original UCMR3 chemicals

Collection of Groundwater Samples for Perfluorooctanoic Acid (PFOA) and Perfluorinated Compounds (PFCs) from Monitoring Wells Sample Protocol

Samples collected using this protocol are intended to be analyzed for perfluorooctanoic acid (PFOA) and other perfluorinated compounds by Modified (Low Level) Test Method 537.

The procedure used must be consistent with the NYSDEC March 1991 Sampling Guidelines and Protocols http://www.dec.ny.gov/docs/remediation_hudson_pdf/sgpsect5.pdf with the following materials limitations.

At this time acceptable materials for sampling include: stainless steel, high density polyethylene (HDPE), PVC, silicone, acetate and polypropylene. Equipment blanks should be generated at least daily. Additional materials may be acceptable if pre-approved by NYSDEC. Requests to use alternate equipment should include clean equipment blanks. **NOTE: Grunfos pumps and bladder pumps are known to contain PFC materials (e.g. Teflon™ washers for Grunfos pumps and LDPE bladders for bladder pumps).** All sampling equipment components and sample containers should not come in contact with aluminum foil, low density polyethylene (LDPE), glass or polytetrafluoroethylene (PTFE, Teflon™) materials including sample bottle cap liners with a PTFE layer. Standard two step decontamination using detergent and clean water rinse will be performed for equipment that does come in contact with PFC materials. Clothing that contains PTFE material (including GORE-TEX®) or that have been waterproofed with PFC materials must be avoided. Many food and drink packaging materials and “plumbers thread seal tape” contain PFCs.

All clothing worn by sampling personnel must have been laundered multiple times. The sampler must wear nitrile gloves while filling and sealing the sample bottles.

Pre-cleaned sample bottles with closures, coolers, ice, sample labels and a chain of custody form will be provided by the laboratory.

1. Fill two pre-cleaned 500 mL HDPE or polypropylene bottle with the sample.
2. Cap the bottles with an acceptable cap and liner closure system.
3. Label the sample bottles.
4. Fill out the chain of custody.
5. Place in a cooler maintained at 4 ± 2º Celsius.

Collect one equipment blank for every sample batch, not to exceed 20 samples.

Collect one field duplicate for every sample batch, not to exceed 20 samples.

Collect one matrix spike / matrix spike duplicate (MS/MSD) for every sample batch, not to exceed 20 samples.

Request appropriate data deliverable (Category A or B) and an electronic data deliverable.

ATTACHMENT 2
ADDITIONAL SITE MANAGEMENT PLAN COMMENTS
(provided electronically)

SMP Template: April 2015

690 SAINT PAUL STREET

MONROE COUNTY

ROCHESTER, NEW YORK

SITE MANAGEMENT PLAN

NYSDEC Site Number: C828159

Prepared for:

Genesee Valley Real Estate

160 Despatch Drive

East Rochester, New York 14445

Prepared by:

LaBella Associates, D.P.C.

300 State Street, Suite 201

Rochester, New York 14614

585-454-6110

Revisions to Final Approved Site Management Plan:

Revision No.	Date Submitted	Summary of Revision	NYSDEC Approval Date

OCTOBER 30, 2017

CERTIFICATION STATEMENT 

I _____certify that I am currently a NYS registered professional engineer as in defined in 6 NYCRR Part 375 and that this Site Management Plan was prepared in accordance with all applicable statutes and regulations and in substantial conformance with the DER Technical Guidance for Site Investigation and Remediation (DER-10).

_____ P.E.

_____DATE

TABLE OF CONTENTS

690 SAINT PAUL STREET

MONROE COUNTY

ROCHESTER, NEW YORK

SITE MANAGEMENT PLAN

Table of Contents

Section	Description	Page
LIST OF ACRONYMS		
ES	**EXECUTIVE SUMMARY**	i
1.0	**INTRODUCTION**	1
1.1	General	1
1.2	Revisions	2
1.3	Notifications	3
2.0	**SUMMARY OF PREVIOUS INVESTIGATIONS AND REMEDIAL ACTIONS**	5
2.1	Site Location and Description	5
2.2	Physical Setting	5
2.3	Investigation and Remedial History	10
2.4	Remedial Action Objectives	20
2.5	Remaining Contamination	22
3.0	**INSTITUTIONAL AND ENGINEERING CONTROL PLAN**	31
3.1	General	31
3.2	Institutional Controls	32
3.3	Engineering Controls	33

TABLE OF CONTENTS (Continued)

Section	Description	Page
4.0	**MONITORING AND SAMPLING PLAN**	39
4.1	General	39
4.2	Site-wide Inspection	40
4.3	Treatment System Monitoring and Sampling (for active ECs)	41
4.4	Post-Remediation Media Monitoring and Sampling	47
5.0	**OPERATION AND MAINTENANCE PLAN**	55
5.1	General	55
5.2	Remedial System (or Other EC) Performance Criteria	56
5.3	Operation and Maintenance of Sub-slab Depressurization System	57
5.4	Operation and Maintenance of Groundwater Pump & Treatment System	59
5.5	Operation and Maintenance of AOC #1 Injection Infrastructure	61
5.6	Operation and Maintenance of AOC #8 Injection Infrastructure	61
5.7	Operation and Maintenance of AOC #6 LNAPL Extraction Wells	62
6.0	**PERIODIC ASSESSMENTS/EVALUATIONS**	62
6.1	Climate Change Vulnerability Assessment	62
6.2	Green Remediation Evaluation	63
6.3	Remedial System Optimization	65
7.0	**REPORTING REQUIREMENTS**	66
7.1	Site Management Reports	66
7.2	Periodic Review Report	68
	7.2.1 Certification of Institutional and Engineering Controls	68
7.3	Corrective Measures Work Plan	72
7.4	Remedial Site Optimization Report	73
8.0	**REFERENCES**	73

TABLE OF CONTENTS (Continued)

List of Tables

Notifications....1.3
Summary of LNAPL Extraction Events....2.3.1.3
Remaining Soil Sample Exceedances....2.5.1A-E
Remaining Groundwater Sample Exceedances....2.5.2A-E
Remaining Soil Vapor Sample Exceedances....2.5.4A-C
SSDS Monitoring Requirements and Schedule....4.3.1A
LNAPL Recovery System Monitoring Requirements and Schedule....4.3.1B
GP&TS Monitoring Requirements and Schedule....4.3.1C
Soil Cover System Monitoring Requirements and Schedule....4.3.1D
Remedial System Sampling Requirements....4.3.2
Post Remedation Sampling Requirements and Schedule....4.4
Monitoring Well Construction Detail....4.4.1
Remedial Systems Operating Requirements....5.2
Summary of AOC #1 Operation and Maintenance....5.5
Summary of AOC #8 Operation and Maintenance....5.6
Summary of AOC #6 Extraction Wells Operation and Maintenance....5.7
Indoor Air Sampling Detail....4.4.2
GP&TS Routine Maintenance Schedule....5.4.2
Schedule of Interim Monitoring/Inspection Reports....7.1

List of Figures

Site Location Map ..... Figure 1
Site Layout Map (Sample Locations, Boundaries, Tax Parcels, etc.) ..... Figure 2A
Site Layout Map (BCP and Institutional Controls) ..... Figure 2B
Investigation Locations ..... Figure 3
Geologic Cross-Section A-A' ..... Figure 4A
Geologic Cross-Section B-B' ..... Figure 4B
Geologic Cross-Section C-C' ..... Figure 4C
Overburden Groundwater Contours-April 2013 ..... Figure 5A
Overburden Groundwater Contours-March 2012 ..... Figure 5B
Bedrock Groundwater Contours-April 2013 ..... Figure 5C
Bedrock Groundwater Contours-January 2012 ..... Figure 5D
Bedrock Groundwater Contours-October/November 2012 ..... Figure 5E
Area of Concern (AOC) Locations ..... Figure 6
Remaining Contamination Overview ..... Figure 7
Remaining Contamination Soil VOCs ..... Figure 7B and 7C
Remaining Contamination Soil SVOCs, PCBs, Pesticides ..... Figure 7D
Remaining Contamination Soil Metals ..... Figure 7E and 7F
Remaining Contamination Groundwater VOCs ..... Figure 7G
Remaining Contamination Groundwater SVOCs, PCBs, Pesticides ..... Figure 7H
Remaining Contamination Groundwater Metals ..... Figure 7I
Sumary of Engineering (EC) Locations ..... Figure 8A
Sumary of AOC #6 Engineering Controls ..... Figure 8B
Sub-Slab Depressurization System Building 14B As-Built ..... Figure 9
Engineering (EC) Locations – Soil Cover System ..... Figure 10
Summary of Soil and Bedrock Samples in AOC 1 ..... Figure 11A
Cross Sections of Soil and Bedrock Samples and Laboratory Results in AOC 1 .Figures 11B-11D
Existing Wells and Wells Monitored via Sampling ..... Figure 12

TABLE OF CONTENTS (Continued)

List of Appendices

Environmental Easement .....Appendix 1
List of Site Contacts.....Appendix 2
Boring and Well Consutrction Logs .....Appendix 3
HASP and CAMP .....Appendix 4
Operations and Maintenance Plan .....Appendix 5
Excavation Work Plan .....Appendix 6
Quality Assurance Project Plan .....Appendix 7
Site Management Forms .....Appendix 8
Remedial System Optimization Table of Contents.....Appendix 9

List of Acronyms

AS	Air Sparging
ASP	Analytical Services Protocol
BCA	Brownfield Cleanup Agreement
BCP	Brownfield Cleanup Program
CERCLA	Comprehensive Environmental Response, Compensation and Liability Act
CAMP	Community Air Monitoring Plan
C/D	Construction and Demolition
CFR	Code of Federal Regulation
CLP	Contract Laboratory Program
COC	Certificate of Completion
CO2	Carbon Dioxide
CP	Commissioner Policy
DER	Division of Environmental Remediation
EC	Engineering Control
ECL	Environmental Conservation Law
ELAP	Environmental Laboratory Approval Program
ERP	Environmental Restoration Program
GHG	Green House Gas
GWE&T	Groundwater Extraction and Treatment
HASP	Health and Safety Plan
IC	Institutional Control
NYSDEC	New York State Department of Environmental Conservation
NYSDOH	New York State Department of Health
NYCRR	New York Codes, Rules and Regulations
O&M	Operations and Maintenance
OM&M	Operation, Maintenance and Monitoring
OSHA	Occupational Safety and Health Administration
OU	Operable Unit
PID	Photoionization Detector
PRP	Potentially Responsible Party
PRR	Periodic Review Report
QA/QC	Quality Assurance/Quality Control
QAPP	Quality Assurance Project Plan
RAO	Remedial Action Objective
RAWP	Remedial Action Work Plan
RCRA	Resource Conservation and Recovery Act
RI/FS	Remedial Investigation/Feasibility Study
ROD	Record of Decision
RP	Remedial Party
RSO	Remedial System Optimization
SAC	State Assistance Contract
SCG	Standards, Criteria and Guidelines
SCO	Soil Cleanup Objective

SMP	Soil Management Plan
SOP	Standard Operating Procedures
SOW	Statement of Work
SPDES	State Pollutant Discharge Elimination System
SSD	Sub-slab Depressurization
SVE	Soil Vapor Extraction
SVI	Soil Vapor Intrusion
SVMS	Soil Vapor Mitigation System
TAL	Target Analyte List
TCL	Target Compound List
TCLP	Toxicity Characteristic Leachate Procedure
USEPA	United States Environmental Protection Agency
UST	Underground Storage Tank
VCA	Voluntary Cleanup Agreement
VCP	Voluntary Cleanup Program

ES EXECUTIVE SUMMARY

The following provides a brief summary of the controls implemented for the Site, as well as the inspections, monitoring, maintenance and reporting activities required by this Site Management Plan:

Site Identification: #C828159; 690 Saint Paul Street, Rochester, New York

Institutional Controls:	1. The property may be used for restricted residential; commercial and industrial uses.
	2. All ECs must be operated and maintained as specified in this SMP.
	3. All ECs must be inspected at a frequency and in a manner defined in the SMP.
	4. The use of groundwater underlying the property is prohibited without necessary water quality treatment as determined by the NYSDOH or the Monroe Department of Health to render it safe for use as drinking water or for industrial purposes, and the user must first notify and obtain written approval to do so from the Department.
	5. Groundwater and other environmental or public health monitoring must be performed as defined in this SMP.
	6. Data and information pertinent to site management must be reported at the frequency and in a manner as defined in this SMP.
	7. All future activities that will disturb remaining contaminated material must be conducted in accordance with this SMP.
	8. Monitoring to assess the performance and effectiveness of the remedy must be performed as defined in this SMP.
	9. Operation, maintenance, monitoring, inspection, and reporting of any mechanical or physical component of the remedy shall be performed as defined in this SMP.

Site Identification:	#C828159; 690 Saint Paul Street, Rochester, New York
	10. Access to the site must be provided to agents, employees or other representatives of the State of New York with reasonable prior notice to the property owner to assure compliance with the restrictions identified by the Environmental Easement.
	11. The potential for vapor intrusion must be evaluated for any buildings developed in the area within the IC boundaries noted on Figure 2A, and any potential impacts that are identified must be monitored or mitigated.
	12. Vegetable gardens and farming on the site are prohibited.
Engineering Controls:	1. Cover system (Site-Wide)
	2. LNAPL removal system (AOC #6C)
	3. Sub-Slab Depressurization Systems (Building 14B)
	4.*Groundwater pump and treatment system (GP&TS system; AOC #1-intermittent operation)
	5. Vent Fan in GPTS Room

and other Actions to Reduce Indoor Air Levels of COCs

Inspections:	Frequency
1. Cover system inspection (Site-Wide)	Annually
2. LNAPL removal system (AOC #6C)	Anually
3. *GP&TS system (AOC #1)	Quarterly
4. Sub-Slab Depressurization Systems (Building 14B)	Annually
5. Well Network	Annually
Monitoring:	
1. AOC #1 Wells BW-04, BW-05, BW-06, BW-07, BW-11, BW-19 BW-20, and BW-21	Semi-Annually
2. LNAPL for AOC #6 Wells RW-East, RW-West, BW-01, BW-14, REC-B-East, REC-B-West, BW-15 and BW-16	Semi-Annually

Site Identification: #C828159; 690 Saint Paul Street, Rochester, New York

3. AOC #8 Wells BW-08, MW-7A, MW-12 and MW-13	Semi-Annually
4. GP&TS system Pumping Wells	Annually
5. GP&TS system effluent between transfer pump and first carbon vessel	Quarterly
6. GP&TS system effluent between carbon vessels	Quarterly
7. GP&TS system effluent after carbon treatment	Monthly
8. Vent fan in GTPS room to confirm operation	Monthly
9. Building 14B SSDS to Confirm Fan Operation	Monthly
10. Indoor air monitoring in Buildings 14A and 14B	Annually
11. Indoor air monitoring in Building 16	Quarterly**
12. Indoor air monitoring in Building 22	Quarterly**
Maintenance:	
1. Cover maintenance	As needed
2. GP&TS well pump maintenance	Annually and as needed
3. GP&TS air compressor maintenance	Quarterly
4. Sub-slab depressurization system	Annually
5. Well Network	Annually
Reporting:	
1. Groundwater and Treatment System Data	Annually
2. Periodic Review Report	Annually
3. EDD submittals for EQuIS	As needed
4.Tenant Notification fo Exceedane of Air Guideline	As needed

Site Identification: #C828159; 690 Saint Paul Street, Rochester, New York

5.Sewer Discharge Reports from GPTS sent to Monroe County Pure Waters	Monthly
Other Reports Upon NYSDEC Request	As needed

~~*It should be noted that the primary objective of the GP&TS is to be utilized as a dispersion tool for the in-situ treatment chemical in AOC #1 rather than an engineering control. However, the GP&TS has been designed to also be utilized as an engineering control *if* future data indicates further groundwater treatment is necessary.~~

**Quarterly monitoring to be completed in Buildings 16 and 22 until the SSDS in this Building is operational, at which time annual inspections of the SSDS will be completed.

Further descriptions of the above requirements are provided in detail in the latter sections of this Site Management Plan.

1.0 INTRODUCTION

1.1 General

This Site Management Plan (SMP) is a required element of the remedial program for the 690 Saint Paul Street Site located in Rochester, New York. See Figure 1. The Site is currently in the New York State (NYS) Brownfield Cleanup Program (BCP) Site No. C828159 which is administered by the New York State Department of Environmental Conservation (NYSDEC).

Genesee Valley Real Estate Company, LLC, entered into a Brownfield Cleanup Agreement (BCA) on July 22, 2009 with the NYSDEC to remediate the site. A figure showing the site location and boundaries of this site is provided in Figure 2A. The boundaries of the site are more fully described in the metes and bounds site description that is part of the Environmental Easement provided in Appendix 1.

After completion of the remedial work, some contamination was left at this site, which is hereafter referred to as "remaining contamination" (refer to Figures 7A-7I). Institutional and Engineering Controls (ICs and ECs) have been incorporated into the site remedy to control exposure to remaining contamination to ensure protection of public health and the environment. An Environmental Easement granted to the NYSDEC, and recorded with the Monroe County Clerk, requires compliance with this SMP and all ECs and ICs placed on the site.

This SMP was prepared to manage remaining contamination at the site until the Environmental Easement is extinguished in accordance with ECL Article 71, Title 36. This plan has been approved by the NYSDEC, and compliance with this plan is required by the grantor of the Environmental Easement and the grantor's successors and assigns. This SMP may only be revised with the approval of the NYSDEC.

It is important to note that:

- This SMP details the site-specific implementation procedures that are required by the Environmental Easement. Failure to properly implement the SMP is a violation of the Environmental Easement, which is grounds for revocation of the Certificate of Completion (COC);
- Failure to comply with this SMP is also a violation of Environmental Conservation Law, 6NYCRR Part 375 and the BCA (Index #B8-0805-09-04; Site #C828159) for the site, and thereby subject to applicable penalties.

All reports associated with the site can be viewed by contacting the NYSDEC or its successor agency managing environmental issues in New York State. A list of contacts for persons involved with the site is provided in Appendix 2 of this SMP.

This SMP was prepared by LaBella Associates, D.P.C. ("LaBella"), on behalf of Genesee Valley Real Estate Company, LLC, in accordance with the requirements of the NYSDEC's DER-10 ("Technical Guidance for Site Investigation and Remediation"), dated August 2009, and the guidelines provided by the NYSDEC. This SMP addresses the means for implementing the ICs and/or ECs that are required by the Environmental Easement for the site.

1.2 Revisions

Revisions to this plan will be proposed in writing to the NYSDEC's project manager. Revisions will be necessary upon, but not limited to, the following occurring: a change in media monitoring requirements, upgrades to or shut-down of a remedial system, post-remedial removal of contaminated sediment or soil, or other significant change to the site conditions. In accordance with the Environmental Easement for the site, the NYSDEC will provide a notice of any approved changes to the SMP, and append these notices to the SMP that is retained in its files. The NYSDEC project manager may also request to initiate modifications to the SMP.

1.3 Notifications

Notifications will be submitted by the property owner to the NYSDEC, as needed, in accordance with NYSDEC's DER – 10 for the following reasons:

- 60-day advance notice of any proposed changes in site use that are required under the terms of the BCA, 6NYCRR Part 375 and/or Environmental Conservation Law.
- 7-day advance notice of any field activity associated with the remedial program.
- 15-day advance notice of any proposed ground-intrusive activity pursuant to the Excavation Work Plan.
- Notice within 48-hours of any damage or defect to the foundation, structures or EC that reduces or has the potential to reduce the effectiveness of an EC, and likewise, any action to be taken to mitigate the damage or defect.
- Verbal notice by noon of the following day of any emergency, such as a fire; flood; or earthquake that reduces or has the potential to reduce the effectiveness of ECs in place at the site, with written confirmation within 7 days that includes a summary of actions taken, or to be taken, and the potential impact to the environment and the public.
- Follow-up status reports on actions taken to respond to any emergency event requiring ongoing responsive action submitted to the NYSDEC within 45 days describing and documenting actions taken to restore the effectiveness of the ECs.

Any change in the ownership of the site or the responsibility for implementing this SMP will include the following notifications:

- At least 60 days prior to the change, the NYSDEC will be notified in writing of the proposed change. This will include a certification that the prospective purchaser/Remedial Party has been provided with a copy of the Brownfield Cleanup Agreement (BCA) and all approved work plans and reports, including this SMP.
- Within 15 days after the transfer of all or part of the site, the new owner's name, contact representative, and contact information will be confirmed in writing to the NYSDEC.

Table 1.3 on the following page includes contact information for the above notification. The information on this table will be updated as necessary to provide accurate contact information. A full listing of site-related contact information is provided in Appendix 2.

Table 1.3: Notifications*

Name	**Contact Information**
Mr. Frank Sowers NYSDEC Project Manager	585-226-5357 frank.sowers@dec.ny.gov
Mrs. Bernette Schilling NYSDEC Regional HW Engineer	585-226-5315 bernette.schilling@dec.ny.gov
Ms. Kelly Lewandowski NYSDEC Site Control	518-402-9553 kelly.lewandowski@dec.ny.us

* Note: Notifications are subject to change and will be updated as necessary.

2.0 SUMMARY OF PREVIOUS INVESTIGATIONS AND REMEDIAL ACTIONS

2.1 Site Location and Description

The Site is located in Rochester, Monroe County, New York and is identified as Section 106.450 Block 0001 and Lot 024 on the Monroe County Tax Map (see Figures 1 and 2). The Site is an approximately 4.739-acre area and is bounded by Hartel Alley to the north with a vacant restaurant and a light industrial (machine shop) building beyond, Lowell St. to the south with a City of Rochester park beyond, Martin Street to the east with a restaurant and residential properties beyond, and St. Paul Street to the west with a Monroe County office building beyond (see Figure 2A – Site Layout Map). The boundaries of the Site are more fully described in Appendix 1 –Environmental Easement. The owner(s) of the Site parcel(s) at the time of issuance of this SMP is:

Genesee Valley Real Estate Company, LLC

2.2 Physical Setting

2.2.1 Land Use

The Site consists of the following: 4.73 acres of land improved with three inter-connected buildings and a fourth separate building. In total, these buildings occupy approximately 89,280 square feet of the Site (footprint area). Building 14B is currently utilized as a City of Rochester School District temporary school ("swing" school space while a school is under construction) and for administrative office space (on the first and second floors). Building 16 is currently partially occupied by a light industrial tenant (assembly of parts), a janitorial service for storage, and the remainder is vacant. Building 14A is partially occupied by a machine shop and the Genesee Valley Real Estate (GVRE) offices on the second floor and Building 22 is utilized by Geva Theatre for storage and scene construction. The Site is currently zoned for industrial use.

The properties adjoining the Site and in the neighborhood surrounding the Site primarily include industrial, commercial and residential properties. The property immediately south of the Site includes a City of Rochester park; the properties immediately north of the Site include industrial and commercial properties; the properties immediately east of the Site include commercial and residential properties; and the properties to the west of the Site include commercial properties.

2.2.2 Geology

The following Site geologic features are based primarily on information obtained from the excavation of test pits and the advancement of test borings completed during the RI. Figures 4A through 4C depict the geologic cross-section locations indicated on Figure 3.

The overburden material at the Site ranges in depth from less than 2 ft on the southern portion of the Site to 12 ft on the northern portion of the Site and consists of a combination of fill and native material. The fill material is up to 8 ft thick and includes sand, crushed gravel and brick, construction and demolition debris, foundry sand, cinders, and ash. The native material underlies the fill material in some areas while in others, the fill material appears to be absent. The thickness of native material ranges up to 10 ft, and the material is primarily a glacial till. The till contains silt, sand, and gravel in varying amounts.

The Decew Dolomite underlies the overburden at the Site. The Decew Dolomite is the uppermost formation of the Clinton Group and consists of variably bedded, dark-gray to olive-gray, argillaceous to sandy, fine-grained dolomite that contains shaly partings and interbeds, as well as frequent pits and vugs. The thickness of this unit is generally 8 to 12 ft. Based on the completion of the RI, bedrock generally dips to the north, diverging to the northeast and northwest in the northern-central portion of the Site.

The Rochester Shale underlies the Decew Dolomite, and is a relatively uniform dark- to medium-gray, pale- and platy-weathering, highly calcareous to dolomitic mudstone. It contains abundant thin interbeds of medium gray, pale-buff weathering, laminated calcisiltites. Although the bottom of this unit was not encountered at the Site, its thickness in Western New York is generally 58 to 65 ft.

Geologic cross-sections of the Site are shown on Figures 4A, 4B, and 4C. Site specific boring logs are provided in Appendix 3.

2.2.3 Hydrogeology

The following section describes the observed hydrogeologic conditions at the site. The following descriptions are based on static water levels measured periodically in monitoring wells throughout the site was well as other observations made during the performance of the RI.

Overburden Groundwater

Apparent groundwater was generally encountered at the Site in the overburden at depths ranging from approximately 4 to 9 ft below the ground surface (bgs). The groundwater in this interval generally flows to the west-southwest, as shown on Figures 5A and 5B. This overall groundwater flow is likely influenced by the Genesee River Gorge to the west/southwest. The Genesee River is approximately 1,000 ft to the west/southwest; however, the gorge walls are approximately 250 ft to the west/southwest. The Genesee River in this area is at an approximate elevation of 391 ft (based on USGS Map) or about 100 ft below the Site. Although the overall groundwater flow in the overburden is towards the Genesee River Gorge, areas of the Site may be influenced by preferential pathways (e.g., subsurface utilities and associated bedding materials). This appears evident in some locations, such as the March 13, 2012 groundwater flow in the northeast portion of the Site (refer to Figure 5B) indicates a flow towards Martin Street.

The groundwater contour elevations correlate closely with the combined sewer invert elevations (and some bedding material beneath the piping). However, a change in the groundwater flow in this area is apparent in the April 4, 2013 groundwater elevations (refer to Figure 5A). These groundwater elevations are after the AOC #2 IRM excavation was completed and, as such, may be influenced by the porous backfill material utilized in this area (i.e., sand). As shown on Figure 5B, the overburden groundwater flow appears to be from Martin Street towards the Site and continues across the Site towards the Genesee River. The backfill material in AOC #2 may have created a 'bathtub' which now places porous media to the top of rock in this area (top of rock ranges from about 481 ft to 480 ft) which is below the inverts of the sewer on Martin Street and thus is likely pulling groundwater from Martin Street towards the Site; as opposed to the apparent Pre-IRM groundwater flow from the Site towards Martin Street in this area of the Site.

Seasonal variations to the overburden groundwater flow were evaluated and are summarized below. It should be noted that discrete seasonal groundwater contouring was not completed due to a number of factors (also described below):

- The overburden groundwater appears to fluctuate seasonally over portions of the Site to the extent that groundwater will 'dip' into the top of bedrock and numerous overburden wells have been dry, and thus changes in actual flow direction could not be evaluated accurately.

- The IRMs completed at the Site and hydraulic connectivity testing included significant dewatering operations which is presumed to had impacted groundwater flow at the time of the work and for some period after the work (until equilibrium was established).

Although overburden groundwater flow could not be contoured seasonally, the overall groundwater flow to the Genesee River Gorge is not anticipated to vary seasonally due to the strong influence of the Gorge and significant elevation change. Rather, it is likely that only localized changes in groundwater flow occur in proximity to the underground utilities as groundwater elevations fluctuate below or above the piping inverts/bedding materials.

Bedrock Groundwater

Underlying the overburden water-bearing zone, the shallow bedrock water-bearing interval was identified as the uppermost bedrock down to depths of approximately 20 ft bgs. This interval is the uppermost water-bearing unit within the bedrock, and no low permeability horizon separates this zone from the overburden. Groundwater flow direction is generally to the west and west-northwest, as shown on Figures 5C, 5D and 5E. These figures indicate very little seasonal variability in bedrock groundwater flow direction between spring (Figure 5C), winter (Figure 5D) and fall (Figure 5E). Bedrock groundwater flow was generally to the west in the spring and winter and to the west-northwest in fall.

Additionally, vertical groundwater flow directions were evaluated based on water elevations measured in April 2013. Based on assessments of water elevations in overburden and shallow bedrock wells, the water elevations in the overburden were higher than in the bedrock well, suggesting a downward flow direction.

One deeper bedrock well (BW-13) was installed with a screened interval of 26.8 to 36.8 ft bgs. Although no distinct low permeability horizon separates this zone from the shallow bedrock, purging of the 22 to 26.8 ft open bedrock interval resulted in insufficient groundwater for sampling.

Because only one well was installed in this interval, groundwater flow directions could not be ascertained. However, comparison of water elevations in this well to the adjacent shallow bedrock monitoring wells BW-4 and BW-11, the vertical flow direction appears to be downward. The difference in water elevations was significant, approximately 20 ft, suggesting very poor communication between the upper and deeper bedrock intervals. This difference in water elevations is likely the result of very limited fracturing within the deeper bedrock interval, which was corroborated during packer testing which demonstrated very limited water (insufficient volume for sampling) in the interval 22 to 26.8 ft bgs.

Groundwater overburden contours are included on Figures 5A and 5B and bedrock groundwater contours are included on Figures 5C, 5D, and 5E. Groundwater monitoring and well construction logs are provided in Appendix 3.

2.3 Investigation and Remedial History

The following narrative provides a remedial history timeline and a brief summary of the available project records to document key investigative and remedial milestones for the Site. Full titles for each of the reports referenced below are provided in Section 8.0 - References.

2.3.1 Remedial Investigation

This section summarizes the Remedial Investigation (RI) work and the IRMs completed at the Site. Based on the data obtained from this work, the AOCs remaining at the Site are presented on Figure 6. The following reports were utilized to develop the below findings:

- Phase I Environmental Site Assessment (ESA) completed by LaBella in February 2008.
- Phase II ESA Data Summary Package completed by LaBella in August 2008.
- Interim Remedial Measure Report completed by LaBella in November 2008.
- Remedial Investigation Report completed by LaBella in June 2014.

These reports were submitted to the NYSDEC under separate cover.

A remedial investigation (RI) serves as the mechanism for collecting data to:

- characterize site conditions;
- determine the nature of the contamination; and
- assess risk to human health and the environment.

The RI is intended to identify the nature (or type) of contamination which may be present at a site and the extent of that contamination in the environment on the site, or leaving the site. The RI reports on data gathered to determine if the soil, groundwater, soil vapor, indoor air, surface water or sediments may have been contaminated. Monitoring wells are installed to assess groundwater and soil borings or test pits are installed to sample soil and/or waste(s) identified. If other natural resources are present, such as surface water bodies or wetlands, the water and sediment may be sampled as well. Based on the presence of contaminants in soil and groundwater, soil vapor will also be sampled for the presence of contamination. Data collected in the RI influenced the development of remedial alternatives. The RI results are summarized in section 2.3.3.1.

The analytical data collected on this site includes data for:

- Outdoor ambient air
- Groundwater
- Soil
- Soil vapor
- Indoor ambient air
- Sub-slab vapor

To determine whether the contaminants identified in various media are present at levels of concern, the data from the RI were compared to media-specific SCGs. The Department has developed SCGs for groundwater, surface water, sediments, and soil. The NYSDOH has developed SCGs for drinking water and soil vapor intrusion. For a full listing of all SCGs see: http://www.dec.ny.gov/regulations/61794.html.

2.3.1.1 Remedial Investigation Results

The data have identified contaminants of concern. A "contaminant of concern" is a contaminant that is sufficiently present in frequency and concentration in the environment to require evaluation for remedial action. Not all contaminants identified on the property are contaminants of concern. The nature and extent of contamination and environmental media requiring action are summarized below. Additionally, the RI Report contains a full discussion of the data. The contaminant(s) of concern identified at this Site are:

TRICHLOROETHENE (TCE)	DIBENZ[A,H]ANTHRACENE
VINYL CHLORIDE	INDENO(1,2,3-CD)PYRENE
XYLENE (MIXED)	CHRYSENE
PCB-AROCLOR 1254	PETROLEUM PRODUCTS
BENZ(A)ANTHRACENE	LEAD
BENZO(A)PYRENE	MANGANESE
BENZO(B)FLUORANTHENE	CIS-1,2-DICHLOROETHENE

The contaminant(s) of concern exceed the applicable SCGs for:

- Groundwater
- Soil
- Indoor air
- Soil vapor intrusion

2.3.1.2 Interim Remedial Measures

An IRM is conducted at a site when a source of contamination or exposure pathway can be effectively addressed before issuance of the Decision Document.

The following IRM(s) has/have been completed at this Site based on conditions observed during the RI.

- Soil Removal - Former Oil House Area (AOC 1)

  Based on the preliminary investigation results, it was determined that there was an area of TCE contaminated soil that could be readily excavated.

  An IRM was conducted in 2011 which included the excavation and off-Site disposal of 142 tons of soil and 185 tons of bedrock. Additionally, 32,000 gallons of water was removed from the excavation and disposed of off-Site. Post-excavation confirmation soil sample results were below unrestricted use SCOs, with minor exceptions.

- Soil Removal - Former Foundry (AOC 2) and Other Miscellaneous Areas (AOC 6A-D)

  The subsurface investigation of the site identified five areas of contaminated soil and one area of contaminated groundwater that could be readily cleaned up by an IRM. The primary contaminants are different in each area and include petroleum-related volatile organic compounds (VOCs), semi-volatile organic compounds (SVOCs), and lead.

  AOC 2 IRM was completed from July 2012 to May 2013 and included excavating contaminated soils from five specific areas of the site and treating groundwater in one area. A total of approximately 840 cubic yards of soil were excavated and properly disposed of off-Site. The excavations were then backfilled with clean soil meeting SCOs for restricted-residential use. Confirmation soil sampling and testing indicated some remaining contamination exceeding restricted residential or protection of groundwater SCOs, in 4 of the 5 areas. To prevent human contact with this remaining contamination, a demarcation layer was placed and the areas of concern were either covered with stone in preparation of being re-paved or covered with at least 2 ft of clean soil.

Approximately 28,400 gallons of groundwater were removed from the excavations and properly disposed of off-Site. A biological amendment was also added to one excavation to treat remaining petroleum related groundwater contamination.

2.3.1.3 Summary of Environmental Assessment

Based upon investigations conducted to date, the primary contaminants of concern include trichloroethene (TCE) and its associated degradation products, petroleum related compounds including light non-aqueous phase liquid (LNAPL), and polycyclic aromatic hydrocarbons (PAHs). Additional contaminants include some pesticides, polychlorinated biphenyls (PCBs), and metals.

- **Soil:** Concentrations of TCE identified in soil remaining on site (up to about 0.8 parts per million (ppm)) slightly exceed the SCOs for the protection of groundwater (0.47 ppm). The TCE impacted soils are located under the parking lot in the northwest portion of the site (AOC 8) at depths of 8 ft to the top of bedrock (about 12 ft). TCE contaminated soils are not expected to extend off-Site.

  Petroleum related compounds, primarily xylene, are present in the central portion of the site (AOC 6) and along the site boundary in the northeast corner of the site (AOC 2). Concentrations of xylene (up to about 33 ppm) in AOC 6 exceed the SCOs for unrestricted use (0.26 ppm). This area of petroleum impacts is located underneath buried electric lines and is approximately 30 ft wide starting at depths of about 4 ft bgs to the top of bedrock (about 9 ft). Petroleum related compounds are expected to be present off-Site near AOC 2.

  Concentrations of xylene (up to 5.6 ppm) along the northeast site boundary of AOC 2 moderately exceed the SCOs for unrestricted use. This area represents the low level contamination remaining along the site boundary after the completion of an IRM. The impacted area is under pavement and is approximately 50 ft wide starting at depths of 8 to 10 ft bgs to the top of bedrock (about 12 ft). Xylene

likely extends off Site in this area. Off-site land use immediately adjacent to this area consists of the Martin Street right of way.

PAHs, including benzo(a)pyrene (BaP), are present in the central portion of the Site (AOC 6) and underneath Site buildings (AOC 5). Concentrations of BaP (up to 2.7 ppm) in AOC 6 slightly exceed the SCOs for restricted residential use (1 ppm). This area of PAH impacted soil covers approximately 2,000 square (sq) ft and is located underneath a demarcation layer and 2 ft of clean soil that was installed as an IRM. Impacts start just under the demarcation layer and extend to about 7 ft bgs.

Concentrations of BaP (up to 45 ppm) in AOC 5 exceed the SCOs for restricted residential use. Elevated levels of PAHs in AOC 5 soils were detected sporadically and AOC 5 soils are covered by building slabs. Site-related PAHs are not anticipated to extend off-site.

Fill material below the asphalt parking lot (portions of AOCs 2, 3, 6, and 8) has the potential to sporadically contain manganese and lead at concentrations above the SCOs for restricted residential use. Some pesticides, polychlorinated biphenyls (PCBs) and metals are also present sporadically throughout the site at concentrations above SCOs for unrestricted use, but below SCOs for residential use and below 1 ppm for PCBs.

- **Groundwater:** Chlorinated solvents, specifically TCE and its associated degradation products, are present in the central portion of the site (AOC 1) and the northwest portion of the site (AOC 8). In AOC 1, chlorinated solvents significantly exceed groundwater standards (typically 5 parts per billion (ppb)), with a maximum concentration of approximately 9,700 ppb (sum of TCE and associated degradation products). Vertically, TCE contamination in AOC 1 is limited to the shallow bedrock zone approximately 8.7 to 18.7 ft bgs. This was determined by collection and laboratory analysis of soil samples form silty seams

within the bedrock as well as samples of the bedrock near the silty seams. A summary of the sampling work used to determine the vertical extent of TCE contamination in the groundwater is summarized on Figures 11A-11D. These figures summarize sample results and depths of soil and bedrock samples collected within the area of AOC 1. Chlorinated solvents did not exceed groundwater standards in the 27 to 37 ft depth interval. Chlorinated solvents associated with AOC 1 appear to be migrating off–Site in the bedrock groundwater. Slight amounts (approximately 157 ppb) of TCE and associated degradation products have migrated under Site buildings and about 180 ft to the western site boundary along Saint Paul Street.

TCE is the primary groundwater contaminant at AOC 8 exceeding groundwater standards (5 ppb), with a maximum concentration of approximately 13,000 ppb. Vertically, TCE contamination is primarily associated with the overburden in this area. TCE in the shallow bedrock slightly exceeds groundwater standards ranging from 17 ppb to 34 ppb. TCE degradation products are also present at low levels. TCE from AOC 8 appears to be migrating off–Site in the overburden groundwater. A moderate amount (approximately 2,000 ppb) of TCE has migrated about 60 ft to the western Site boundary along Saint Paul Street.

- **Light Non-Aqueous Phase Liquid (LNAPL)**: A thin layer of LNAPL is present in several wells in the central portion of the site (AOCs 1 and 6). This material was tested and identified as Lube Oil, but also contains PCBs and TCE. LNAPL is not anticipated to extend off-Site.

- **Soil Vapor and Indoor Air:** Sub-slab and indoor air sampling indicated actions were needed to address soil vapor intrusion within each of the on Site buildings. PCE, TCE, and cis-1,2-DCE were detected at levels above those which are expected to be found in indoor air. TCE was detected in the indoor air of an unoccupied building at a concentration of 6.5 micrograms per cubic meter ($\mu g/m^3$) which exceeds the NYSDOH guidance value of 5 $\mu g/m^3$. Maximum sub-

slab sampling results for PCE, TCE, and cis-1,2-DCE were 2.6, 21, and 15 µg/m^3, respectively.

A sub-slab depressurization system (SSDS) was installed under Building 14B in 2008 to mitigate the potential for contaminant vapors to migrate through the floor and into the indoor air.

Approximately 40 post-mitigation indoor air sampling events have been completed. For each sampling event, indoor air samples were collected from up to four locations within the building. .

Property line soil vapor sampling indicated the potential for off-Site soil vapor migration, particularly near AOC 8, with maximum levels of PCE, TCE, and cis-1,2-DCE levels of 32 µg/m^3, 4,400 µg/m^3, and 170 µg/m^3, respectively.

- **AOC 1 Remedial Work:** To address the remaining contamination in AOC #1, enhanced *in-situ* chemical reduction with bioaugmentation was selected as the remedial approach. The *in-situ* chemical reduction treatment chemical (Ferrox Plus) was introduced into the subsurface in two ways: 1) via the infrastructure previously installed in the footprint of the AOC # IRM excavation and 2) via treatment wells to the southwest of the excavation area and between the sewer line (which appears to be a preferential pathway for impacts). This approach was designed to significantly decrease the contaminant mass via the creation of conditions that will enhance reductive dechlorination of chlorinated VOCs. From June through August 2017, approximately 36 gallons of Ferrox Plus into was injected to each treatment well.

  In addition, a pump and treat system was also installed utilizing extraction wells. The pump and treat system is utilized to help disperse the treatment chemical injected in the vicinity of BW-05 and BW-06 as well as to treat impacted groundwater down-gradient of BW-05 and BW-06. It should be noted that the

pump and treat portion of this approach is intended to be a temporary feature until such time as a substantial distribution of the treatment chemical is confirmed. In addition, the pump and treat system will be utilized as a contingency in the event groundwater concentrations do not reduce to acceptable levels.

- **AOC #6 Remedial Work:** Light Non-Aqueous Phase Liquid (LNAPL) has been periodically observed in overburden wells RW-West, RW-East and bedrock well BW-1. These wells and two additional wells (REC-B-East and REC-B-West) have been used for LNAPL monitoring and extraction events in the northern portion of AOC #6C since 2011. LNAPL has been observed periodically/sporadically since the installation of these wells. Several extraction events have been completed via vacuuming or the use of absorbent socks to address LNAPL observed in monitoring wells at the Site. The table below summarizes groundwater/LNAPL extraction events completed at the Site.

Table - 2.3.1.3 Summary of LNAPL Extraction Events

Date	Targeted Wells	Description of Product Observed	Waste Generated
January 19, 2011	BW-1, RW-West and RW-East	RW-East : ~1.01' LNAPL RW-West: ~1.22' LNAPL BW-1: ~0.35' LNAPL	RW-East : ~55 gal. water/oil RW-West: ~55 gal. water/oil BW-1: ~55 gal. water/oil
February 2012	BW-05* and BW-10	Trace (<1 mm) of LNAPL in both wells	BW-05*: 5 absorbent socks BW-10: 1 absorbent sock
February 22, 2012	REC-B-East; REC-B-West; and BW-1	Less than 1cm of LNAPL in all three (3) wells	REC-B-East: ~45 gal. water REC-B-West: ~70 gal. water BW-1: ~90 gal. water/oil
April 23, 2013 to May 13, 2013	RW-East	Trace (<1 mm) of LNAPL	2 absorbent socks
July 31, 2013	BW-1 and RW-West	BW-1: ~0.08" LNAPL RW-West: Trace LNAPL	RW-West: ~80 gal. water/oil BW-1: ~60 gal. water/oil
October 10, 2013	RW-West & BW-05*	RW-West: Trace LNAPL BW-05*: ~0.8' LNAPL	RW-West: ~82 gal. water/oil BW-05*: ~45 gal. water/oil
December 2, 2013	RW-West, RW-East & BW-05*	RW-West: ~1" LNAPL RW-East: Trace LNAPL BW-05*: ~0.08" LNAPL	RW-West: ~45 gal. water/oil RW-East: ~50 gal. water/oil BW-05*: ~45 gal. water/oil

*BW-05 is located in AOC #1. Impacts identified in this well are being addressed under a separate RDWP.

- **AOC 8 Remedial Work:** As described in the approved Remedial Design Work Plan (RDWP), *In-Situ* Chemical Oxidation (ISCO) was the process selected to chemically oxidize contaminants of concern (TCE) in AOC #8 and enhance degradation. To facilitate the ISCO process in AOC #8, the treatment chemical sodium permanganate was procured from Hepure Technologies, Inc. (Hepure) and shipped at a 40% solution to the Site.

  Four 275-gallon totes of 40% solution were shipped to the Site and stored in a secondary containment structure inside Building 22, as described in the RDWP. The sodium permanganate solution was further diluted on Site with potable water to a 10% solution prior to pumping into the underground infrastructure. The underground infrastructure consisted of a series of five (5) PVC and stone overburden trenches through which the oxidant solution was introduced into the subsurface. Batches of 10% solution were mixed in a 1,000 gallon capacity poly tank, which was also stored within the secondary containment structure. A 1-inch braided PVC hose was used to convey the permanganate solution from the mixing tank to the underground trench infrastructure. The hose was equipped with a ball valve to allow for the shutting off of flow of permanganate at each injection point location to avoid spillage.

  A double-diaphragm pump was used to introduce the oxidant solution into each subsurface trench. At each infrastructure location, the 1-inch hose was placed approximately five (5) feet below ground into the PVC trench riser and the solution was allowed to gravity feed into the subsurface.

  Injection of the 10% permanganate solution was initiated on October 20, 2015 and completed on November 25, 2015. The permanganate solution was introduced into each subsurface trench until it either accepted the appropriate batch volume or began to surcharge up the PVC riser, in which case injection activity was stopped. All of the permanganate solution intended to be introduced into the subsurface was successfully injected. The following table summarizes

the total volume of 10% sodium permanganate solution injected into each subsurface trench.

Subsurface Trench ID	Total Gallons of 10% Permanganate Solution Injected
Trench 1	470
Trench 2	1,125
Trench 3	1,140
Trench 4	1,040
Trench 5	1,000
Total:	4,775

Dispersion of the treatment chemical was evaluated by visually observing the color of the groundwater in the three (3) overburden monitoring wells (MW-7R, MW-12, MW-13) and one (1) bedrock monitoring well (BW-8) installed in AOC #8 as described in the RDWP. Visual monitoring was completed daily during the injection work and weekly thereafter. Evidence of dispersion of the permanganate solution was observed in MW-7R and MW-12 soon after the chemical oxidant was introduced into Trench 2 and Trench 5. Evidence of dispersion of the permanganate solution was not observed in BW-8 or MW-13.

2.4 Remedial Action Objectives

The Remedial Action Objectives (RAOs) for the Site as listed in the Decision Document dated December 2014 are as follows:

Groundwater

RAOs for Public Health Protection

- Prevent ingestion of groundwater with contaminant levels exceeding drinking water standards.

- Prevent contact with, or inhalation of, volatiles from contaminated groundwater.

RAOs for Environmental Protection

- Restore ground water aquifer to pre-disposal/pre-release conditions, to the extent practicable.
- Prevent the discharge of contaminants to surface water.
- Remove the source of ground or surface water contamination.

Soil

RAOs for Public Health Protection

- Prevent ingestion/direct contact with contaminated soil.
- Prevent inhalation of or exposure from contaminants volatilizing from contaminants in soil.

RAOs for Environmental Protection

- Prevent migration of contaminants that would result in groundwater or surface water contamination.

Soil Vapor

RAOs for Public Health Protection

- Mitigate impacts to public health resulting from existing, or the potential for, soil vapor intrusion into buildings at a site.

2.5 Remaining Contamination

Remaining contamination at the Site is described below and refers to soil impacts above Unrestricted Use SCOs and groundwater impacts above Part 703 Groundwater Standards or NYSDEC Technical and Operational Guidance Series (TOGS) 1.1.1 values. Tables 2.5.1A (VOCs), 2.5.1B (SVOCs), 2.5.1C (Metals), 2.5.1D (Pesticides), and 2.5.1E (PCBs) summarize the remaining soil impacts, and Tables 2.5.2A (VOCs), 2.5.2B (SVOCs), 2.5.1C (Metals), 2.5.1D (Pesticides), and 2.5.1E PCBs summarize the remaining groundwater impacts. Figure 7B-7F summarizes the results of soil samples collected that exceed the Unrestricted Use SCOs and the Restricted Residential Use SCOs at the site as well as the approximate depth and thickness of remaining soil impacts.

2.5.1 Soil

Remaining soil contamination at the site is discussed below per AOC. Tables 2.5.1A (VOCs), 2.5.1B (SVOCs), 2.5.1C (Metals), 2.5.1D (Pesticides), and 2.5.1E (PCBs) summarize the remaining soil impacts and Figure 7B-7F summarizes the results of soil samples collected that exceed the Unrestricted Use SCOs and the Restricted Residential Use SCOs at the site as well as the approximate depth and thickness of remaining soil impacts.

- *AOC #1:* Remaining soil impacts in AOC #1 are limited to one (1) detection of 4,4'-DDT (a pesticide) at a concentration above the Unrestricted Use SCO, but below the Restricted Residential SCO for this compound. This detection was made in a confirmatory sample collected in 2011 from the southern sidewall of the AOC #1 IRM excavation. As depicted on Figure 7B-7F, the pesticide impacts appear to extend between 2 ft and 5 ft bgs. A total of approximately 22 CY of pesticide-impacted soil appears to be present in AOC #1.

- *AOC #2:* Concentrations of manganese have sporadically been detected above Restricted Residential SCOs in confirmatory samples collected from the 2012 AOC #2 IRM excavation (refer to Figure 7B-7F). These detections were generally identified between 4 ft bgs and the top of bedrock (approximately 12 ft bgs). Approximately 500 CY of manganese-impacted soil appears present in AOC #2. In addition, select petroleum-related VOCs have been identified at concentrations above Restricted Residential SCOs along the Site's eastern property line adjacent to 2012 AOC #2 IRM excavation footprint. These property line impacts have been identified between 10 ft bgs to the top of bedrock (approximately 12 ft bgs). The extent of off-site impacts has not been determined. It should be noted that AOC #2 is primarily covered by an asphalt parking lot.

- *AOC #3:* Select pesticides have been identified above Unrestricted Use SCOs but below Restricted Residential SCOs in a portion of AOC #3 (refer to Figure 7B-7F). These impacts are beneath an asphalt parking lot between approximately 4 ft and 8-f. bgs and appear to have a volume of approximately 35 CY.

- *AOC #4:* Concentrations of select metals, pesticides, PAHs and PCBs have been identified in this AOC at concentrations above Unrestricted Use SCOs but below Restricted Residential SCOs. These impacts are located beneath the concrete floor slab of Building 14A between approximately 0.6 ft and 3.5 ft bgs and appear to have a volume of approximately 14 CY.

- *AOC #5:* As depicted on Figure 7B-7F, concentrations of select PAHs have been detected above Unrestricted Use and/or Restricted Residential SCOs in three areas of AOC #5 (at total of approximately 600 CY). In addition, select metals have been identified at concentrations above Unrestricted Use SCOs but below Restricted Residential SCOs in four areas of AOC #5 (at total of approximately 600-CY). Total PCBs were identified above Unrestricted Use SCOs but below Restricted Residential SCOs in two areas of AOC #5 (at total of approximately

580 CY). Select pesticides and acetone (a VOC) were each detected in one area of AOC #5 at concentrations above Unrestricted Use SCOs but below Restricted Residential SCOs (each at totals of approximately 575 CY and 3.5 CY, respectively).

It should be noted that all AOC #5 impacts are located beneath the concrete floor slabs of Buildings 14A, 14B and 16.

- *AOC #6:* As depicted on Figure 7B-7F, total PCBs and select pesticides were identified above Unrestricted Use SCOs but below Restricted Residential SCOs between 0 ft and 5 ft bgs to the north of AOC #1 (a total of approximately 545 CY). In addition, select PAHs have been identified above Unrestricted Use and/or Restricted Residential SCOs between 4 ft and 5.5 ft bgs immediately north of Building 14B (a total of approximately 10 CY). Finally, select metals and pesticides have been sporadically detected above Unrestricted Use SCOs beneath the parking lot on the northern portion of the Site, between approximately 0.5 ft and 5 ft bgs (a total of approximately 4,700 CY).

- *AOC #6C:* Concentrations of xylene (a VOC) have been detected above Unrestricted Use and Protection of Groundwater SCOs but below Restricted Residential SCOs in a confirmatory sample collected from the northeastern sidewall of the AOC #6C excavation in 2012. These impacts appear to be present between 7 ft and 10 ft bgs (a total of approximately 12 CY). In addition, analysis of soil samples collected from beneath the high voltage electrical underground utility in AOC #6C in 2008 identified select petroleum-related VOCs above Unrestricted Use and Protection of Groundwater SCOs, but below Restricted Residential SCOs. These impacts appear to be present between 4 ft and 9 ft bgs (a total of approximately 50 CY).

- *AOC #6D:* Concentrations of select PAHs have been identified above Restricted Residential SCOs between 2 ft and 5 ft bgs (a total of approximately 260 CY). As part of the 2012 IRM, this area was capped with a cover system consisting of a demarcation layer below 2 ft of clean soil cover. The demarcation layer consists of orange construction fencing.

- *AOC #7:* Impacts have not been identified in AOC #7.

- *AOC #8:* Concentrations of TCE (a chlorinated VOC) have been identified above Unrestricted Use and Protection of Groundwater SCOs but below Restricted Residential SCOs in the central portion of AOC #8 (refer to Figure 7B-7F). These impacts are present between 8 ft bgs and the top of bedrock (approximately 12 ft bgs), a total of approximately 55 CY. It should be noted that this area is covered by a parking lot. Portions of the asphalt surface were disturbed with the implementation of the final remedy in AOC #8; howeer, this entire area was repaved subsequent to the completion of active remedial activities in this area (i.e., introduction of the in-situ treatment chemical).

2.5.2 Groundwater

Remaining groundwater contamination at the Site is described below per applicable AOC and refers to groundwater impacts above Part 703 Groundwater Standards or NYSDEC Technical and Operational Guidance Series (TOGS) 1.1.1 values. Tables 2.5.2 summarize the remaining groundwater impacts and Figure 7 summarizes the area of groundwater that exceeds the Part 703 Groundwater Standards or NYSDEC TOGS 1.1.1 values.

- *AOC #1:* Based on the post-IRM groundwater sampling, groundwater quality in immediate proximity to AOC #1 appears to have improved following the removal of significant CVOC mass and NAPL from AOC #1. Although contaminant concentrations in well BW-5 initially decreased significantly, there has been some rebound observed in the June 2013 groundwater samples; however, the overall

total VOC concentration in this well has decreased approximately 30%. Contaminant concentrations in wells down-gradient of this area have also significantly decreased, with BW-04 and BW-07 each indicating an approximate 90% reduction in VOCs since the implementation of the IRM. Concentrations in BW-06 have not shown significant reductions, and, in fact, a 30% increase in CVOCs concentrations was observed between the initial and most recent groundwater sampling. A hydraulic connectivity test completed in August 2013 appears to show a connection between the apparent former AOC #1 source area and BW-06; however, this well is cross/down gradient from the apparent source area. In addition, a sewer lateral which extends through the apparent source area towards BW-06 may have contributed to higher concentrations of CVOCs in groundwater observed in BW-06.

It should also be noted that due to the high concentrations of TCE breakdown products (e.g., cis-1,2 dichloroe thene, vinyl chloride, etc.) identified in groundwater samples collected from within AOC #1, degradation of CVOCs is evident in AOC #1.

Based on the extensive groundwater sampling in this area and the analysis of pre-IRM of contamination in AOC #1 have been adequately defined. Specifically, Groundwater impacts (i.e., VOCs present at concentrations above Part 703 Groundwater Standards) appear present within a 27,500-square foot area in AOC #1, as depicted on Figure 7G-7H.

Vertically, TCE contamination in AOC #1 is limited to the shallow bedrock zone approximately 8.7 to 18.7 ft bgs. This was determined by collection and laboratory analysis of soil samples from silty seams within the bedrock as well as samples of the bedrock near the silty seams. A summary of the sampling work used to determine the vertical extent of TCE contamination in the groundwater is summarized on Figures 11A-11D. These figures summarize sample results and depths of soil and bedrock samples collected within the area of AOC #1.

Chlorinated solvents did not exceed groundwater standards in the 27 to 37 ft depth interval. Chlorinated solvents associated with AOC #1 appear to be migrating off–Site in the bedrock groundwater.

To address the remaining contamination in AOC #1, enhanced *in-situ* chemical reduction (Ferrox Plus) was selected as the remedial approach. The *in-situ* chemical reduction treatment chemical was introduced into the subsurface in two ways: 1) via the infrastructure previously installed in the footprint of the AOC # IRM excavation and 2) via 13 treatment wells to the southwest of the excavation area and between the sewer line (which appears to be a preferential pathway for impacts). This approach was designed to significantly decrease the contaminant mass via the creation of conditions that will enhance reductive dechlorination of chlorinated VOCs. In addition, a pump and treat system was also installed utilizing extraction wells. The pump and treat system is utilized to help disperse the treatment chemical injected in the vicinity of BW-05 and BW-06 as well as to treat impacted groundwater down-gradient of BW-05 and BW-06. It should be noted that the pump and treat portion of this approach is intended to be a temporary feature until such time as a substantial distribution of the treatment chemical is confirmed. In addition, the pump and treat system was designed to be utilized as a contingency in the event groundwater concentrations do not reduce to acceptable levels.

- *AOC #3:* Benzene and select metals have been identified in overburden groundwater at concentrations above TOGS 1.1.1 standards in the northern portion of AOC #3. These groundwater impacts appear to be present within an approximately 250 sq ft area within AOC #3, as depicted on Figure 7G-7I.

- *AOC #8:* Contaminants of concern (COCs) at the Site were found to be primarily petroleum- and solvent-related VOCs. The area partially under the northern portion of Building 22 and immediately north of Building 22 was identified as AOC #8. Concentrations of trichloroethene (TCE) and its degradation products

(e.g., cis-1,2-dichloroethene, vinyl chloride, etc.) have been identified in soil and both overburden and bedrock groundwater in AOC #8, with substantially higher concentrations detected in overburden groundwater than in the bedrock groundwater. Based on field observations and data generated by the laboratory analysis of soil and groundwater samples collected from AOC #8, the nature and extent of on-site impacts within this AOC appear adequately defined. Specifically, on-site impacts appear to be present within an approximately 15,000 sq ft area in AOC #8, as depicted on Figure 7G-7I. Groundwater contaminant modeling indicates that these impacts may extend off-site under an approximately 12,000 sq ft area to the west of AOC #8.

2.5.3 Light Non-Aqueous Phase Liquid (LNAPL)

As indicated in the RI, LNAPL has been periodically observed in AOC #6C overburden wells RW-West, RW-East and bedrock well BW-1. Analysis of a sample of LNAPL from the original recovery wells identified 1,2,4-trimethylbenzene, four SVOCs, several metals (including arsenic, barium, chromium and lead), several pesticides (including 4,4'-DDE, 4,4'-DDD and 4,4'-DDT) and total PCBs at levels above NYCRR Part 703 Groundwater Standards. Analysis of a LNAPL sample from BW-1 identified aluminum, iron and sodium above NYCRR Part 703 Groundwater Standards.

Wells RW-West, RW-East and BW-1 have been used for LNAPL monitoring and extraction events in the northern portion of AOC #6C since 2011. LNAPL has been observed periodically/sporadically since the installation of these wells. Additional monitoring wells were installed in 2012 (REC-B-East and REC-B-West) and 2015 (BW-14 through BW-16) as part of the LNAPL monitoring program. LNAPL has not been observed in these wells.

Seven extraction events were completed between January 2011 and December 2013; however, a total of only approximately 0.6 gallons of LNAPL was able to be recovered during these extraction events. Based on the lack of LNAPL observed in BW-14, BW-15, REC-B-West and REC-B-East, the continued sporadic presence of limited volumes of LNAPL in RW-West and RW-East appears to be the result of the highly isolated location of LNAPL surrounding these wells and/or potentially the result of limited volumes of LNAPL trapped in the 2 ft diameter perforated section of each of the original recovery wells.

Based on the lack of LNAPL observed in interface well BW-16 (installed immediately proximate to BW-1) and other bedrock wells in this area of the Site, the limited volumes of LNAPL sporadically observed in BW-1 appear to be isolated to bedrock below approximately 12 ft bgs and are estimated to be located in the area depicted on Figure 7.

2.5.4 Soil Vapor

Sub-slab and indoor air sampling indicated actions were needed to address soil vapor intrusion within each of the onsite buildings. PCE, TCE, and cis-1,2-DCE were detected at levels above those which are expected to be found in indoor air. During the RI, TCE was detected in the indoor air of an unoccupied building (Building 14A) at a concentration of 6.5 µg/m^3 which exceeds the NYSDOH guidance value of 2 µg/m^3 and is also above typical indoor air concentrations. Sub-slab sampling results detected maximum PCE, TCE, and cis-1,2-DCE levels of 2.6, 21, and 15 µg/m^3, respectively. Based on these results, actions in Building 14A are required to reduce the indoor air levels to within backgourn levels before the building is occupied.

A SSDS was installed under Building 14B in 2008 to mitigate the potential for contaminant vapors to migrate through the floor and into the indoor air.

Approximately 40 post-mitigation indoor air sampling events have been completed. For each sampling event, indoor air samples were collected from up to six locations within the building.

In addition, a separate SSDS was installed in the southern, occupied portion of Building 22 in 2015 in anticipation of remediation in AOC #8, which could cause increased levels of volatilization of CVOCs (and thus a potential soil vapor intrusion issue) beneath Building 22. Based on pressure field extension testing, the SSDS did not appear to be obtaining any measurable influence and was thus shut off. In place of the Building 22 SSDS, indoor air sampling has been completed within the southern portion of Building 22 subsequent to the implementation of the RDWP for AOC #8. Results to date indicate chemicals of concern are below the NYSDOH Air Guideline and background levels for samples collected within Building 22.

In addition, indoor air sampling has been completed within Building 16 since implementation of the AOC #1 remedial system in 2016. Results to date indicate chemicals of concern are below the NYSDOH Air Guideline and background levels for samples collected within Building 16.

Property line soil vapor sampling indicated the potential for off-site soil vapor migration, particularly near AOC #8, with maximum levels of PCE, TCE, and cis-1,2-DCE levels of 32, 4,400, and 170 µg/m^3, respectively.

Table 2.5.4A (Building 14A), Table 2.5.4B (Building 16), and Table 2.5.4C (Building 22) summarizes the results of samples of soil vapor and indoor air that exceed the SCGs.

3.0

3.0 INSTITUTIONAL AND ENGINEERING CONTROL PLAN

3.1 General

Since remaining contamination exists at the site, Institutional Controls (ICs) and Engineering Controls (ECs) are required to protect human health and the environment. This IC/EC Plan describes the procedures for the implementation and management of all IC/ECs at the site. The IC/EC Plan is one component of the SMP and is subject to revision by the NYSDEC.

This plan provides:

- A description of all IC/ECs on the site;
- The basic implementation and intended role of each IC/EC;
- A description of the key components of the ICs set forth in the Environmental Easement;
- A description of the controls to be evaluated during each required inspection and periodic review;
- A description of plans and procedures to be followed for implementation of IC/ECs, such as the implementation of the Excavation Work Plan (EWP) (as provided in Appendix 6) for the proper handling of remaining contamination that may be disturbed during maintenance or redevelopment work on the site; and
- Any other provisions necessary to identify or establish methods for implementing the IC/ECs required by the site remedy, as determined by the NYSDEC.

3.2 Institutional Controls

A series of ICs is required by the Decision Document to: (1) implement, maintain and monitor Engineering Control systems; (2) prevent future exposure to remaining contamination; and, (3) limit the use and development of the site to restricted residential, commercial and industrial uses only. Adherence to these ICs on the site is required by the Environmental Easement and will be implemented under this SMP. ICs identified in the Environmental Easement may not be discontinued without an amendment to or extinguishment of the Environmental Easement. The IC boundaries are shown on Figure 2. These ICs are:

- The property may be used for restricted residential; commercial and industrial uses;
- All ECs must be operated and maintained as specified in this SMP;
- All ECs must be inspected at a frequency and in a manner defined in the SMP.
- The use of groundwater underlying the property is prohibited without necessary water quality treatment as determined by the NYSDOH or the Monroe Department of Health to render it safe for use as drinking water or for industrial purposes, and the user must first notify and obtain written approval to do so from the Department.
- Groundwater and other environmental or public health monitoring must be performed as defined in this SMP.
- Data and information pertinent to site management must be reported at the frequency and in a manner as defined in this SMP.
- All future activities that will disturb remaining contaminated material must be conducted in accordance with this SMP.
- Monitoring to assess the performance and effectiveness of the remedy must be performed as defined in this SMP.
- Operation, maintenance, monitoring, inspection, and reporting of any mechanical or physical component of the remedy shall be performed as defined in this SMP.

- Compliance with all elements of the Site Management Plan is required.
- Access to the site must be provided to agents, employees or other representatives of the State of New York with reasonable prior notice to the property owner to assure compliance with the restrictions identified by the Environmental Easement.
- The potential for vapor intrusion must be evaluated for any buildings developed in the area within the IC boundaries noted on Figure 2, and any potential impacts that are identified must be monitored or mitigated.
- Vegetable gardens and farming on the site are prohibited;

3.3 Engineering Controls

3.3.1 Cover (or Cap)

Exposure to remaining contamination at the site is prevented by a cover system placed over the site. This cover system is comprised of a minimum of 24 inches of clean soil and/or a competent layer of asphalt pavement, concrete-covered sidewalks, and concrete building slabs. Figure 8B presents the location of the cover system and applicable demarcation layers. The Excavation Work Plan (EWP) provided in Appendix 6 outlines the procedures required to be implemented in the event the cover system is breached, penetrated or temporarily removed, and any underlying remaining contamination is disturbed. Procedures for the inspection of this cover are provided in the Monitoring and Sampling Plan included in Section 4.0 of this SMP. Any work conducted pursuant to the EWP must also be conducted in accordance with the procedures defined in a Health and Safety Plan (HASP) and associated Community Air Monitoring Plan (CAMP) prepared for the site and provided in Appendix 4.

Procedures for operating and maintaining the cover system are documented in the Operation and Maintenance Plan (Section 5.0 of this SMP). As built drawings, signed and sealed by a professional engineer, are included in Appendix 5 – Operations and Maintenance Manual. Figures 8A and 8B shows the location of the ECs for the site.

3.3.2 LNAPL Removal System

The goal of this EC is to remove recoverable product from monitoring wells in AOC #6C, if encountered. Although previous assessments identified traces of LNAPL in overburden wells (i.e., RW-East and RW-West) and in bedrock (i.e., BW-1), extraction events have removed limited volumes of LNAPL (i.e., a total of approximately 0.6-gallons during extraction events between January 2011 and December 2013). The LNAPL recovery system consists of monitoring a network of 8 groundwater monitoring wells for the presence of LNAPL. The presence of LNAPL is monitored with a bailer and/or oil-water interface meter, combined with the installation of absorbent well sock (*PIG® Monitoring Well Skimming Sock*, or similar) as needed to recover any identified LNAPL present in the wells. The 8 wells monitored are shown on Figure 8B and Site Management Forms to monitor for LNAPL in AOC #6 is included in Appendix 8.

Procedures for operating and maintaining the LNAPL removal system are documented in the Operation and Maintenance Plan (Section 5.0 of this SMP).

3.3.3 Sub-Slab Depressurization Systems

Building 14B

The SSDS depressurizes the sub-slab in parts of Buildings 14B, thus mitigating potential soil vapor intrusion issues within portions of these buildings. In addition to the continual operation of the SSDS, monitoring of the effectiveness of the SSDS includes periodic checks of pressure field extension (PFE) monitoring points as well as the collection of ambient air samples within these buildings. The layout and components of the SSDS system is shown on Figure 9.

The Building 14B system originally consisted of two separate systems (East and West). Subsequent to the installation of the East and West systems, PFE (located in the southwest corner of Building 14B and in proximity to a void space under the southwest

stairwell) had shown positive pressure in 2010 and 2011. A pilot test conducted in September 2011 demonstrated that connecting a system to vent this void space would produce negative pressure readings and thus, influence sub-slab pressure. However, additional PFE points only indicated marginal influence and thus it was discussed that a separate vent system would be necessary in this area to enhance vacuum in the area of MP-7 and MP-8 .

The system was designed in accordance with the NYSDOH Final Guidance for Soil Vapor Intrusion in the State of New York dated October 2006. The installation of the additional vent systems was initiated on February 20, 2012 and was completed on April 18, 2012.

In addition to the above, due to detections of VOCs in indoor air after the start-up of the Groundwater Pump and Treat System, a venting system was installed for the GPTS room. To prevent potential future off gassing of chemicals of concern into the adjacent occupied building space, a wall was constructed to segregate the GPTS from the adjacent occupied space, and a fan was installed on the building roof to vent the GPTS room. In addition, a poly sheet was placed along doorway that connects to the adjacent stairwell area. Pressure differential readings between the GPTS and adjacent spaces measures -0.011 inches of water column with the vent fan operating, indicating the room was under negative pressure. The NYSDEC approved the restart of the GPTS with conditions in a letter dated September 26, 2017.

Building 22

A SSDS was installed within Buliding 22, however, the SSDS was deemed ineffective based on checks of PFE monitoring points. Specifically PFE monitoring indicated the SSDS was not depressurizing the building slab based on the conditions of the building slab. As a result, the SSDS was not operated and indoor air sampling was conducted to monitor chemicals of concern in the indoor air.

Procedures for operating and maintaining the SSDS are documented in the Operation and Maintenance Plan (Section 5.0 of this SMP). As built drawings, signed and sealed by a professional engineer, are included in Appendix 5 – Operations and Maintenance Manual.

3.3.4 Groundwater Pump and Treatment System (GP&TS)

The GP&TS consists of 3 recovery wells. Each well contains a groundwater extraction pump. The groundwater pumps to the wastewater treatment system consisting of an equalization tank, then through activated carbon drums, and lastly discharged into the local municipal sewer system under a MCPW permit included in the Operation and Maintenance Manual. The groundwater pump and treatment system was installed in July 2016 and has been operating until April 2017.

From April 2017 to October 2017 the GP&TS had ceased operation pending modifications to the room and approval by the NYSDEC to continue operation. The GPTS was shut down as apparent off-gassing from the system operation impacted indoor air within Building 14B as discussed above in Section 3.3.3. The NYSDEC approved the restart of the GPTS with conditions in a letter dated September 26, 2017.

Procedures for operating and maintaining the GP&TS are documented in the Operation and Maintenance Plan (Section 5.0 of this SMP). As built drawings, signed and sealed by

a professional engineer, are included in Appendix 5 – Operations and Maintenance Manual.

3.3.5 Criteria for Completion of Remediation/Termination of Remedial Systems

Generally, remedial processes are considered completed when monitoring indicates that the remedy has achieved the remedial action objectives identified by the decision document. The framework for determining when remedial processes are complete is provided in Section 6.4 of NYSDEC DER-10.

3.3.5.1 Cover (or Cap)

The composite cover system is a permanent control and the quality and integrity of this system will be inspected at defined, regular intervals in accordance with this SMP in perpetuity.

3.3.5.2 LNAPL Recovery System

The LNAPL recovery system will not be discontinued unless prior written approval is granted by the NYSDEC and the NYSDOH. In the event that monitoring data indicates that the LNAPL recovery system may no longer be required, a proposal to discontinue the system will be submitted by the remedial party to the NYSDEC and NYSDOH.

3.3.5.3 Sub-Slab Depressurization Systems (SSDS)

The active SSDS will not be discontinued unless prior written approval is granted by the NYSDEC and the NYSDOH. In the event that monitoring data indicates that the SSDS may no longer be required, a proposal to discontinue the SSDS will be submitted by the remedial party to the NYSDEC and NYSDOH.

3.3.5.4 Groundwater Pump and Treatment System (GPTS)

The GPTS system will not be discontinued unless prior written approval is granted by the NYSDEC. In the event that monitoring data indicates that the GP&TS system may no longer be required, a proposal to discontinue the system, including the results of an impact study, will be submitted by the remedial party. Conditions that may warrant discontinuing the GP&TS system include contaminant concentrations in groundwater that: (1) reach levels that are consistently below ambient water quality standards or the site SCGs as appropriate, (2) have become asymptotic to a low level over an extended period of time as accepted by the NYSDEC; or (3) the NYSDEC has determined that the GP&TS system has reached the limit of its effectiveness. This assessment will be based in part on post-remediation contaminant levels in groundwater collected from monitoring wells located throughout the site. Systems will remain in place and operational until permission to discontinue their use is granted in writing by the NYSDEC.

3.3.5.5 In-Situ Chemical Reduction (ISCR) for AOC #1 and In-Situ Chemical Oxidation (ISCO) for AOC #8

Groundwater monitoring activities to assess contaminant degradation will continue, as determined by the NYSDEC with consultation with NYSDOH, until residual groundwater concentrations are found to be consistently below ambient water quality standards, the site SCGs, or have become asymptotic at an acceptable level over an extended period. In the event that monitoring data indicates that monitoring may no longer be required, a proposal to discontinue monitoring will be submitted by the remedial party. Monitoring will continue until permission to discontinue is granted in writing by the NYSDEC. If groundwater contaminant levels become asymptotic at a level that is not acceptable to the NYSDEC, additional source removal, treatment and/or control measures will be evaluated.

4.0 MONITORING AND SAMPLING PLAN

4.1 General

This Monitoring and Sampling Plan describes the measures for evaluating the overall performance and effectiveness of the remedy. This Monitoring and Sampling Plan may only be revised with the approval of the NYSDEC. Details regarding the sampling procedures, data quality usability objectives, analytical methods, etc. for all samples collected as part of site management for the site are included in the Quality Assurance Project Plan provided in Appendix 7.

This Monitoring and Sampling Plan describes the methods to be used for:

- Sampling and analysis of all appropriate media (e.g., groundwater, indoor air, soil vapor, soils);
- Assessing compliance with applicable NYSDEC standards, criteria and guidance (SCGs), particularly groundwater standards and Part 375 SCOs for soil; and
- Evaluating site information periodically to confirm that the remedy continues to be effective in protecting public health and the environment;

To adequately address these issues, this Monitoring and Sampling Plan provides information on:

- Sampling locations, protocol and frequency;
- Information on all designed monitoring systems;
- Analytical sampling program requirements;
- Inspection and maintenance requirements for monitoring wells;
- Inspection of all monitoring and injection wells;
- Monitoring well decommissioning procedures; and

- Annual inspection and periodic certification.

Reporting requirements are provided in Section 7.0 of this SMP.

4.2 Site – wide Inspection

Site-wide inspections will be performed a minimum of once per year. Modification to the frequency or duration of the inspections will require approval from the NYSDEC. Site-wide inspections will also be performed after all severe weather conditions that may affect ECs or monitoring devices. During these inspections, an inspection form will be completed as provided in Appendix 8 – Site Management Forms. The form will compile sufficient information to assess the following:

- Compliance with all ICs, including site usage;
- An evaluation of the condition and continued effectiveness of ECs;
- General site conditions at the time of the inspection;
- The site management activities being conducted including, where appropriate, confirmation sampling and a health and safety inspection; and
- Confirm that site records are up to date.

Inspections of all remedial components installed at the site will be conducted. A comprehensive site-wide inspection will be conducted and documented according to the SMP schedule, regardless of the frequency of the Periodic Review Report. The inspections will determine and document the following:

- Whether ECs continue to perform as designed;
- If these controls continue to be protective of human health and the environment;
- Compliance with requirements of this SMP and the Environmental Easement;
- Achievement of remedial performance criteria; and

- If site records are complete and up to date.

Reporting requirements are outlined in Section 7.0 of this plan.

Inspections will also be performed in the event of an emergency. If an emergency, such as a natural disaster or an unforeseen failure of any of the ECs occurs that reduces or has the potential to reduce the effectiveness of ECs in place at the site, verbal notice to the NYSDEC must be given by noon of the following day. In addition, an inspection of the site will be conducted within 5 days of the event to verify the effectiveness of the IC/ECs implemented at the site by a qualified environmental professional, as determined by the NYSDEC. Written confirmation must be provided to the NYSDEC within 7 days of the event that includes a summary of actions taken, or to be taken, and the potential impact to the environment and the public.

4.3 Treatment System Monitoring and Sampling

4.3.1 Remedial System Monitoring

Monitoring of the SSDS, LNAPL recovery system, soil cover system, and the GP&TS will be performed on a routine basis, as identified in Tables 4.3.1A through 4.3.1D Remedial System Monitoring Requirements and Schedule (see below). Modification to the frequency or sampling requirements will require approval from the NYSDEC. A visual inspection of the complete system will be conducted during each monitoring event. Unscheduled inspections and/or sampling may take place when a suspected failure of a system has been reported or an emergency occurs that is deemed likely to affect the operation of the system. Remedial system components to be monitored include, but are not limited to, the components included in Tables 4.3.1A through 4.3.1D below.

Table 4.3.1A – SSDS Monitoring Requirements and Schedule

Remedial System Component	Monitoring Parameter	Operating Range	Monitoring Schedule
Fans	Pressure	Should be within typical operating range	Monthly or as-needed
Fans	Pressure Field Extension	Sub-Slab Pressures a minimum of 0.004 inches of water column lower than indoor air pressure or consistent with historic measurements	Annually or as-needed
Alarms and piping	Operational/condition	Minimim 0.25 inches of water columns for Fans 1, 2 and 3. Fan 4 is audible alarm that triggers when there is a loss of power to Fan 4.	Annually or as-needed

Table 4.3.1B – LNAPL Recovery System Monitoring Requirements and Schedule

Remedial System Component	Monitoring Parameter	Operating Range	Monitoring Schedule
AOC #6C Wells: BW-1, RW-East, RW-West, REC-B-East, REC-B-West, BW-14, BW-15 and BW-16	Presence of LNAPL	NA	Semi-Annually*

*refer to Section 3.3.2 for additional information regarding the LNAPL recovery system.

Table 4.3.1C – GP&TS Monitoring Requirements and Schedule

Remedial System Component	Monitoring Parameter	Operating Range	Monitoring Schedule
Vent Fan in GPTS Operating	Operational/condition	NA	Monthly or as-needed
ISCR Compound in Equalization Tank	Visual – brown to orange colored water	NA	Monthly or as-needed
Well Pumps	Operational/condition	NA	Annually or as-needed
Transfer Pump	Operational/condition	NA	Monthly or as-needed
Air Compressor	Operational/condition	NA	Monthly or as-needed
Sampling Port - Between transfer pump and first carbon vessel	VOCs	NA	Quarterly
Sampling Port – Between carbon vessels	VOCs	NA	Quarterly
Sampling Port – After carbon vessels	MCPW Requirements	MCPW Permit Requirements	Monthly
Water Level Alarms	Operational/condition	NA	Annually or as-needed
General System Piping and Tank	Operational/condition	NA	Monthly or as-needed
Extraction and Treatment Wells	Operational/condition	NA	Annually or as-needed

*NA denotes Not Applicable

Table 4.3.1D – Soil Cover System Monitoring Requirements and Schedule

Remedial System Component	Monitoring Parameter	Operating Range	Monitoring Schedule
AOC #6D Soil Cap	Condition of Cover	NA	Annually
Building slab	Condition of Cover	NA	Annually
Concrete Surface	Condition of Cover	NA	Annually
Asphalt Surface	Condition of Cover	NA	Annually
Soil Cover	Condition of Cover	NA	Annually

A complete list of components to be inspected is provided in the Inspection Checklist, provided in Appendix 8 - Site Management Forms. If any equipment readings are not within their specified operation range, any equipment is observed to be malfunctioning or the system is not performing within specifications; maintenance and repair, as per the Operation and Maintenance Plan, is required immediately.

4.3.2 Remedial System Sampling

Samples shall be collected from the GP&TS system on a routine basis from various sampling ports (refer to as-built drawings in Appendix 5). Groundwater sampling locations, required analytical parameters and schedule are provided in Table 4.3.2 – Remedial System Sampling Requirements and Schedule below and well locations are shown on Figure 12. Modification to the frequency or sampling requirements will require approval from the NYSDEC.

Table 4.3.2 – Remedial System Sampling Requirements and Schedule

Sampling Location	Analytical Parameters			Schedule
	VOCs (EPA Method 624)	Total VOCs (EPA Method 8260)	VOC (Method TO-15)	
AOC 1 Groundwater Monitoring				
BW-04, BW-05, BW-06, BW-07, BW-9, BW-11, BW-12, BW-19, BW-20, and BW-21**		X		Semi-annually (Spring and Fall)
AOC 8 Groundwater Monitoring				
MW-7A, MW-12, MW-13, and BW-8		X		Semi-annually (Spring and Fall)
Indoor Air				
Building 14B			X	Annually (during the heating season, before the end of January)
Building 14A			X	Annually
Building 16			X	Quarterly
Building 22			X	Quarterly
GP&TS				
Between transfer pump and first carbon vessel	X			Quarterly
Between carbon vessels	X			Quarterly
After carbon vessels	X			Monthly*

*When in operation- this is a Monroe County Pure Water discharge permit requirement.

**Additional groundwater parameters will be collected during each sampling event as outlined in Table 4.4.

Detailed sample collection and analytical procedures and protocols are provided in Appendix 7 – Quality Assurance Project Plan.

Indoor air samples will be collected using Summa™ canisters equipped with a critical orifice flow regulation device to allow an air sample to be collected over an approxiamte 8-hour sampling period. Care will be taken to deploy the canisters away from the influence of any forces air emanating from air conditiond or heating units vents. The indoor air sampling procedure is summarized as follows:

- Canisters will be deployed in areas not subject to disturbances and which will not interfere with the occupant's normal activities.
- Air sample canisters will be labeled with sample locations (i.e. building and/or building room ID) and recoreded along with the unique canister and guage number will provided by the laboratory in the field log book or field notes.
- The canister vacuum, date, and time will be measured and recoreded in a field log book or field notes immediately upon sample deployment and immediately prior to the end of the sample period.
- Other date recorded will include: sampler same, sample period, if there is evidence of disturbance, and any comments.
- At the completion of the sampling work all samples will be sent under chain of custody procedures for analysis of TO-15 parameters.

Sampling and analysis of the GP&TS will be conducted quarterly to monitor the performance of the system and monthly in accordance with MCPW discharge permit requirements. The quarterly and monthly sampling procedure is summarized as follows:

- All samples will be labeled with sample location, date, time, sampler, required analysis, and recorded in the field log book or field notes.
- Each sample will be placed in two 40 mL glass vials with a Teflon cap liner and preserved with acid. A new pair of disposable nitrile gloves will be used at each sampling locations.
- The quartlery samples will be analyzed for VOCs using USEPA Method 8260 and the monthly samples will be analyzed for VOCs using USEPA Method 624.

- Once the sample is collected in will be placed in a cooler and preserved with ice and submitted under chain of custody procdures to the laboratory for analysis.

4.4 Post-Remediation Media Monitoring and Sampling

Samples shall be collected from the designated groundwater monitoring wells located in AOC #1 and AOC#8 on a routine basis. Sampling locations, required analytical parameters and schedule are provided in Table 4.4 – Remedial System Sampling Requirements and Schedule below. Sample locations are shown on Figure 12. Modification to the frequency or sampling requirements will require approval from the NYSDEC.

Table 4.4 – Post Remediation Sampling Requirements and Schedule

Sampling Location	Analytical Parameters						Schedule
	TCL EPA Method 8260)	Nitrate and Sulfate (EPA Method 300.1)	Total Iron (EPA Method 6010	Total Organic Carbon	Alkalinity and Iron (II)[1]	Oxidation Reduction Potential, pH, Disolved Oxygen[2]	
AOC #1 Monitoring Wells: BW-04, BW-05, BW-06, BW-07, BW-9, BW-11, BW-12, BW-19, and BW-20	X	X	X	X	X	X	Semi annually
AOC #1 Monitoring Well: BW-21	X						Semi annually
AOC #8 Monitoring Wells: MW-7, MW-12, MW-13, and BW-8	X						Semi annually

[1] Parameter to be measured in the field with Hach® test kit or equivalent
[2] Parameter to be measured in the field with a water quality meter

Detailed sample collection and analytical procedures and protocols are provided in Appendix 7 – Quality Assurance Project Plan.

4.4.1 Groundwater Sampling

Groundwater monitoring will be performed semi-annually to assess the performance of the remedy. Modification to the frequency or sampling requirements will require approval from the NYSDEC.

The network of monitoring wells has been installed to on-site and within the contaminant plume and downgradient to monitor groundwater conditions at the site. The network of on-site and off-site wells has been designed based on the following criteria:

- Monitor the performance of the injection of an In-Situ Chemical Reduction (ISCR) with Bioaugmentation compound EHC®-L in AOC #1.
- Monitor the performance of the chemical oxidant sodium permanganate ("RemOx® L") in AOC #8.
- Monitor the off-site migration of chemicals of concern at AOC #1 and AOC #8.

Groundwater Samples for AOC #1 will be collected using low flow sampling techniques in accordance with USEPA Regiona 1 Low Stress (low flow) Purging and Sampling Procedure for the collection of Groundwater Sample from Monitoring Wells dated July 30, 1996 and last revise January 19, 2010.Groundwater monitoring wells will be sampled using low-flow sampling methods (i.e. bladder pump or other method approved by NYSDEC Project Manager). Low flow purging of the monitoring wells will include collection of water quality indicator parameters. Water quality indicator parameters will be recorded at three (3) or five (5)-minute intervals during the purging of the wells. These water quality indicator parameters will include:

- Water Level Drawdown
- Temperature
- pH
- Dissolved Oxygen
- Specific Conductance
- Oxidation Reduction Potential
- Turbidity

Groundwater sampling will commence once the groundwater quality indicator parameters have stabilized for at least three (3) consecutive readings for the following parameters:

- Water Level Drawdown <0.3'
- Temperature - +/- 3%
- pH - +/- 0.1unit
- Dissolved Oxygen - +/-10%
- Specific Conductance - +/-3%
- Oxidation Reduction Potential - +/-10 millivolts
- Turbidity - +/-10% for values greater than 1 NTU

As an alternative to low-flow sampling, passive diffusion bag (PDB) samplers will be used to collect groundwater samples from wells associated with AOC #8. Groundwater samples that are collected via passive methods (i.e., no-purge) will be collected according to the following procedures:

- PDB samplers will be deployed by hanging in the well at the middle of the well screen unless a low water table, need to deploy multiple samplers or the targeting of a specific depth interval is identified. The PDB samplers will be deployed at least 14 days prior to sampling.

- The PDB samplers will be deployed using a Teflon® coated string or synthetic rope.
- When transferring water from the PDB to sample containers, care will be taken to avoid agitating the sample, since agitation promotes the loss of volatile constituents;
- Any observable physical characteristics of the groundwater (e.g., color, sheen, odor, turbidity) at the time of sampling will be recorded; and
- Weather conditions at the time of sampling will be recorded. Each groundwater sample collected for laboratory analysis will be labeled and preserved in accordance with the QAPP.

Laboratory sampling will include analysis of sample blanks as follows: one trip blank for each sampling matrix type (i.e., soil, groundwater, soil vapor). The blanks will be provided at a rate of one per 20 samples collected for each parameter group, or one per shipment, whichever is greater. Additionally, one (1) Matrix Spike/Matrix Spike Duplicate (MS/MSD) and one (1) duplicate sample will be collected and analyzed for each twenty samples collected for each parameter group, or one per shipment, whichever is greater. Duplicate samples will be submitted to the laboratory as blind duplicates. The samples will be delivered under Chain of Custody procedures to a NYSDOH Environmental Laboratory Approval Program (ELAP)-certified laboratory. A NYSDEC ASP Category B Deliverables data package will be developed for all final samples but not for any routine monitoring samples. In addition, a DUSR will be completed for all ASP-B laboratory data packages per DER-10 for any final samples. When completed, the DUSRs will include the laboratory data summary pages showing corrections made by the data validator and each page will be initialed by the data validator. The laboratory data summary pages will be included even if no changes were made

Table 4.4.1 summarizes the wells identification number, as well as the purpose, location, depths, diameter and screened intervals of the wells. As part of the groundwater monitoring, the following wells will be sampled to evaluate the effectiveness of the remedial system.

Table 4.4.1 – Monitoring Well Construction Details

Monitoring Well ID	Well Location	Coordinates (longitude/ latitude)	Well Diameter (inches)	Elevation (above mean sea level)			
				Casing	Surface	Screen Top	Screen Bottom
AOC #1							
BW-04	Source	43.1686° N, -77.6175° W	3.875	488.15	488.88	NA	NA
BW-05	Source	43.1686° N, -77.6174° W	3.875	488.36	488.89	NA	NA
BW-06	Source	43.1684° N, -77.6174° W	3.875	488.16	488.56	NA	NA
BW-07	Down-gradient	43.1684° N, -77.6179° W	3.875	491.81	492.31	NA	NA
BW-08	Source	43.1692° N, -77.6186°W	3.875	491.61	492.02	NA	NA
BW-09	Source	43.1225 N, -75.1898 W	3.875	491.57	492.01	NA	NA
BW-11	Source	43.1225 N, -75.1897W	3.875	488.49	488.49	NA	NA
BW-12	Source		3.875	489.28	488.94	NA	NA
BW-19	Down-gradient	43.1682° N, -77.6177° W	3.875	--	--	NA	NA
BW-20	Down-gradient	43.1683° N, -77.6176° W	3.875	--	--	--	--
BW-21	Down-gradient	--	3.875	--	--	--	--
AOC #8							
MW-7A	Source	43.1693° N, -77.6186° W	1.0	NA	491.98	NA	490.08 to 480.08
MW-12	Down-gradient	43.1691° N, -77.6187° W	--	492.10	--	--	--

Monitoring Well ID	Well Location	Coordinates (longitude/ latitude)	Well Diameter (inches)	Elevation (above mean sea level)			
				Casing	Surface	Screen Top	Screen Bottom
MW-13	Down-gradient	43.1690° N, -77.6186° W	--	490.50	--	--	--
BW-8	Upgradient	40.7127° N, 74.0059° W	2.0	517.455	515.06	500.56	495.56

Monitoring well construction logs are included in Appendix 3 of this document.

If biofouling or silt accumulation occurs in the on-site and/or off-site monitoring wells, the wells will be physically agitated/surged and redeveloped. Additionally, monitoring wells will be properly decommissioned and replaced, if an event renders the wells unusable.

Repairs and/or replacement of wells in the monitoring well network will be performed based on assessments of structural integrity and overall performance.

The NYSDEC will be notified prior to any significant repair or decommissioning of any monitoring well for the purpose of replacement, and the repair or decommissioning and replacement process will be documented in the subsequent Periodic Review Report. Well decommissioning without replacement will be done only with the prior approval of the NYSDEC. The NYSDEC will not be notified for minor repairs such as reaplacing bolts or j-plugs. Mintor repairs will be documented and included in the Periodic Review Report. Well abandonment will be performed in accordance with NYSDEC's guidance entitled "CP-43: Groundwater Monitoring Well Decommissioning Procedures." Monitoring wells that are decommissioned because they have been rendered unusable will be replaced in kind in the nearest available location, unless otherwise approved by the NYSDEC.

All monitoring wells and other subsurface infrastructure associated with the remediation and Site Management Plan activities will be properly decommissioned when it is determined the are no longer needed and upon NYSDEC approval.

The sampling frequency may only be modified with the approval of the NYSDEC. This SMP will be modified to reflect changes in sampling plans approved by the NYSDEC.

Deliverables for the groundwater monitoring program are specified in Section 7.0 – Reporting Requirements.

4.4.2 Indoor Air Sampling

Indoor air and outdoor ambient air samples will be collected utilizing individually certified-clean 1-liter Summa® canisters (or equivalent) equipped with laboratory calibrated flow controllers. The samples will be collected over an approximate eight (8) hour time period. The indoor and outdoor air samples will be collected at a height of approximately 3 to 5 feet above the floor or ground surface to simulate the breathing zone. The outdoor air sample will be collected at an upwind location or roof of Building 14. Immediately after opening each Summa® canister, the initial vacuum (inches of mercury) and time will be noted and recorded on the laboratory chain-of-custody. After approximately eight (8) hours, final vacuum readings (inches of mercury) will be noted and the Summa® canisters will be closed. All samples will be collected over the same general time period and in the same manner at all locations to minimize possible discrepancies.

Subsequent to completing indoor air sampling, the samples will be sent under chain of custody control to a NYSDOH Environmental Laboratory Approval Program certified laboratory for testing. The samples will be tested for a specific list of VOCs using United States Environmental Protection Agency Method TO-15. A NYSDEC ASP Category B Deliverables data package will be developed for all final samples but not for

any routine monitoring samples. In addition, a DUSR will be completed for all ASP-B laboratory data packages per DER-10 for any final samples. When completed, the DUSRs will include the laboratory data summary pages showing corrections made by the data validator and each page will be initialed by the data validator. The laboratory data summary pages will be included even if no changes were made

Table 4.4.2 summarizes the sampling frequency and parameters tested for monitoring indoor air at the site.

Table 4.4.2 – Indoor Air Sampling Details

Building	**Sample Frequency**	**Sample Locations**		**Sample Analyses**
Building 14A	Annually	Interior	Elevator (see Figure 9)	TO-15
Building 14B	Annually	Interior	Rooms 117, 112, 107, and 134 Elevator (see Figure 9)	TO-15
		Exterior	Roof	
Building 16	Quarterly	Interior	Approximately center of occupied space	Trichloroethene, cis-1,2-dichloroethene, trans-1,2-dichloroethene, vinyl chloride, chloroethane
		Exterior	Upwind location	
Building 22	Quaterly	Interior	Approximately center of occupied space	Trichloroethene, cis-1,2-dichloroethene, trans-1,2-dichloroethene, vinyl chloride, chloroethane
		Exterior	Upwind location	

4.4.3 Monitoring and Sampling Protocol

All sampling activities will be recorded in a field book or field notes and associated sampling log as provided in Appendix 8 - Site Management Forms. Other observations (e.g., groundwater monitoring well integrity, etc.) will be noted on the sampling log. The sampling log will serve as the inspection form for the monitoring network. Additional detail regarding monitoring and sampling protocols are provided in the site-specific Field Activities Plan provided as Appendix 9 of this document.

5.0 OPERATION AND MAINTENANCE PLAN

5.1 General

This Operation and Maintenance Plan provides a brief description of the measures necessary to operate, monitor and maintain the mechanical components of the remedy selected for the site. This Operation and Maintenance Plan:

- Includes the procedures necessary to allow individuals unfamiliar with the site to operate and maintain the SSDS, GP&TS, soil cover system, and LNAPL recovery system;
- Will be updated periodically to reflect changes in site conditions or the manner in which the SSDS, GP&TS, soil covery system, and LNAPL recovery system are operated and maintained.

Further detail regarding the Operation and Maintenance of the SSDS, GP&TS, soil cover system, and LNAPL recovery system are provided in Appendix 5 - Operation and Maintenance Manual. A copy of this Operation and Maintenance Manual, along with the complete SMP, is maintained at the site. This Operation and Maintenance Plan is not to be used as a stand-alone document, but as a component document of this SMP.

5.2 Remedial System (or other Engineering Control) Performance Criteria

The following operating requirements for each remedial system area summarized in Table 5.2. For each element, routine and non-routine maintenance will be documented in the periodic Review Reports.

Table 5.2 - Remedial System Operating Requirements

Remedial System	Operating Requirements	Permit Requirements
Soil Cover	Annual inspection for cover condition (including, Soil Cap for AOC #6D, building slabs, concerete, asphalt and soil cover, refer to Table 4.3.1D)	None
SSDS (Building 14B)	-Annual inspection of system components -Monthly inspection of system gagues and fans to confirm operation -Maintain 0.004 inches of water columns throughout target area or consistent with historical measurements -Quarterly inspection of condensate water at locations of traps in SSDS piping. Condensate water will be removed as needed	None
SSDS (Building 22)	-No inspection of the system as it is not operating	None
GP&TS (AOC #1)	Semi-annual sampling of wells within AOC#1. Quarterly sampling of effluent to monitor effectiveness of remedial system and monthly sampling of effluent per MCPW requirements. Potential for additional injections pending results	MCPW sewer use permit.
LNAPL Recovery System	Semi-annual inspection for	None

Remedial System	Operating Requirements	Permit Requirements
(AOC #6)	wells in AOC #6 for LNAPL. If LNAPL identified, deploy absorbent sock.	
Injection System Infrastructure (AOC #8)	Semi-annual sampling of wells within AOC #8 with additional possible injections pending results	None

5.3 Operation and Maintenance of Sub-Slab Depressurization System (SSDS)

The following sections provide a description of the operations and maintenance of the Sub-Slab Depressurization (SSD) System. Cut-sheets and as-built drawings for the SSDS are provided in Appendix 5 - Operations and Maintenance Manual. Routine and non-routine maintenance will be documented in the periodic Review Reports.

5.3.1 System Start-Up and Testing

After the SSDS is installed or modified a start-up test will be performed to evaluate the effectiveness of the SSDS. The first step will be to start each of the SSDS fans on the roof of the building to document that the fans are functioning properly. Once the fans are fully operational at the roof level, a digital micromanometer will be used to collect vacuum readings from the pressure field extension (PFE) monitoring points in the buildings. PFE measurements will generally need to achieve a minimum of 0.004 inches of water vacuum in order to meet the performance requirements of the October 2006 NYSDOH Final Guidance for Evaluating Soil Vapor Intrusion in the State of New York. If these criteria are not met, adjustments will be made to the SSDS fans to increase air flow and vacuum influence including replacement of the fans with larger fans, if necessary.

The system testing described above will be conducted if, in the course of the SSDS system lifetime, the system goes down or significant changes are made to the system and the system must be restarted.

5.3.2 Routine System Operation and Maintenance

All fans must be kept in continuous operation. Fans must restart automatically in event of power loss. Fans and gauges must be inspected monthly to verify that values have not changed significantly and SSDS is operating. Monthly inspection forms will be included in the Periodic Review Report.

5.3.3 Non-Routine Operation and Maintenance

In the event of unusual fan noise, failure to start, physical damage or repeated circuit breaker trip, turn fan off and service or replace. Any changes in the structure, HVAC systems, slab conditions, etc. will require a re-evaluation of the SSDS.

5.3.4 System Monitoring Devices and Alarms

The SSDS system has an alarm to indicate that the system is not operating properly within Building 14B. In the event that warning device is activated, applicable maintenance and repairs will be conducted, as specified in the Operation and Maintenance Plan, and the SSDS system will be restarted. Operational problems will be noted in the Periodic Review Report to be prepared for that reporting period.

5.4 Operation and Maintenance of Groundwater Pump and Treatment System (GP&TS)

The following sections provide a description of the operations and maintenance of GP&TS . Cut-sheets and as-built drawings for GP&TS are provided in Appendix 5 - Operations and Maintenance Manual.

5.4.1 System Start-Up and Testing

1. The following activies will be conducted prior to system start-up: Check utilities – equipment is properly connected to buiding electrical system.
2. Check/test equipment – switches, gauges, compressor, and pumps are operational.
3. Check piping and tubing for holes, leaks, and wear.
4. Test high and low level alarm at equalization tank
5. Monitor system operation for potential operation issues for 30 minutes subsequent to start-up.

5.4.2 Routine System Operation and Maintenance

This section includes information for the maintenance of the mechanical and physical components associated with AOC #1. It should be noted that a detailed Operation and Maintenance plan is included in Appendix 5. The following Table 5.4.2 identifies component-specific inspection and maintenance schedules.

Table 5.4.2 – GP&TS Routine Maintenance Schedule

Component	Inspection Frequency	Maintenance Frequency
Well Pumps (Geotech 4.0 Auto-Reclaimer)	Quarterly	Annually and as needed
Transfer Pump (Everbilt 3/4HP Pump)	Quarterly	As needed
Air Compressor (Dewalt Model DXCMV7518075)	Quarterly	Quarterly
Carbon Vessels	Monthly	As needed
Water Level Alarms	Annually	As needed
Equalization Tank, Flowmeter, Valves, etc.	Monthly	As needed
Extraction and Treatment Wells	Annually	As needed
Vent Fan in GPTS Room	Monthly	As needed

The system testing summarized above will be conducted if, in the course of the GP&TS lifetime, the system goes down or significant changes are made to the system and the system must be restarted.

5.4.3 Non-Routine Operation and Maintenance

In the event of unusual equipment noise, failure to start, physical damage, water not pumping, repeated circuit breaker trip, the GP&TS equipment will be serviced or replaced as necessary. Any significant changes to the design or equipment in the GP&TS will require a re-evaluation of the system. Table 5.4.2 provides a summary and schedule of routine maintenance.

5.4.4 System Monitoring Devices and Alarms

The GP&TS has warning devices to indicate that the system is not operating properly. In the event that warning device is activated, applicable maintenance and repairs will be conducted, as specified in the Operation and Maintenance Plan, and the GP&TS will be restarted. Operational problems will be noted in the Periodic Review Report to be prepared for that reporting period.

5.5 Operation and Maintenance of AOC #1 Injection Infrastructure

The following sections provide a description of the operations and maintenance of the AOC #1 injection infrastructure.

Table 5.5 – Summary of AOC #1 Operation and Maintenance

System Start-up and Testing	Routine Operation and Maintenance	None Routine Operation and Maintenance	System Monitoring Devices and Alarms
Not Applicable	Wells will be accessed as needed to evaluate depth to bottom and assess event wells are silting If silting occurs they will be developed per the O&M Plan (refer to Appendix 5)	Not Applicable	Not Applicable

5.6 Operation and Maintenance of AOC #8 Injection Infrastructure

The following sections provide a description of the operations and maintenance of the AOC #8 injection infrastructure.

Table 5.6 – Summary of AOC #8 Operation and Maintenance

System Start-up and Testing	Routine Operation and Maintenance	None Routine Operation and Maintenance	System Monitoring Devices and Alarms
Not Applicable	Wells will be accessed as needed to evaluate depth to bottom and assess event wells are silting. If silting occurs they will be developed per the O&M Plan (refer to Appendix 5)	Not Applicable	Not Applicable

5.7 Operation and Maintenance of AOC #6 Extraction Wells

The following sections provide a description of the operations and maintenance of the AOC #6 injection infrastructure.

Table 5.7 – Summary of AOC #6 Operation and Maintenance

System Start-up and Testing	Routine Operation and Maintenance	None Routine Operation and Maintenance	System Monitoring Devices and Alarms
Not Applicable	Wells will be accessed as needed to evaluate depth to bottom and assess event wells are silting. If silting occurs they will be developed per the O&M Plan (refer to Appendix 5)	Not Applicable	Not Applicable

6.0 PERIODIC ASSESSMENTS/EVALUATIONS

6.1 Climate Change Vulnerability Assessment

Increases in both the severity and frequency of storms/weather events, an increase in sea level elevations along with accompanying flooding impacts, shifting precipitation patterns and wide temperature fluctuation, resulting from global climactic change and instability, have the potential to significantly impact the performance, effectiveness and protectiveness of a given site and associated remedial systems. Vulnerability assessments provide information so that the site and associated remedial systems are prepared for the impacts of the increasing frequency and intensity of severe storms/weather events and associated flooding.

Given the urban nature of the Site and surrounding area, the elevation change from the nearby water body (i.e. Genesee River), and the presence of sufficient municipal storm water collection infrastructure, vulnerability assessments related to flooding do not appear to be warranted. In addition, the active remedial systems at the Site are located

within the Site buildings and are equipped with alarms to identify if a system has been damaged.

6.2 Green Remediation Evaluation

NYSDEC's DER-31 Green Remediation requires that green remediation concepts and techniques be considered during all stages of the remedial program including site management, with the goal of improving the sustainability of the cleanup and summarizing the net environmental benefit of any implemented green technology. This section of the SMP provides a summary of any green remediation evaluations to be completed for the site during site management, and as reported in the Periodic Review Report (PRR).

The Green Remediation Evaluation will include the following items:

- Fossil fuel usage associated with travel to and from the Site for sampling and monitoring activities;
- Energy usage by the SSDS and GP&TS; and
- Waste generateion grom groundwater sampling events (i.e. purge and decontamination waters).

6.2.1 Timing of Green Remediation Evaluations

For major remedial system components, green remediation evaluations and corresponding modifications will be undertaken as part of a formal Remedial System Optimization (RSO), or at any time that the Project Manager feels appropriate, e.g. during significant maintenance events or in conjunction with storm recovery activities.

Modifications resulting from green remediation evaluations will be routinely implemented and scheduled to occur during planned/routine operation and maintenance activities. Reporting of these modifications will be presented in the PRR.

6.2.2. Remedial Systems

Remedial systems will be operated properly considering the current site conditions to conserve materials and resources to the greatest extent possible. Consideration will be given to operating rates and use of reagents and consumables. Spent materials will be sent for recycling, as appropriate.

6.2.3 Building Operations

Structures including buildings and sheds will be operated and maintained to provide for the most efficient operation of the remedy, while minimizing energy, waste generation and water consumption.

6.2.4 Frequency of System Checks, Sampling and Other Periodic Activities

Transportation to and from the Site and use of consumables in relation to visiting the Site in order to conduct system checks and or collect samples and shipping samples to a laboratory for analyses have direct and/or inherent energy costs. The schedule and/or means of these periodic activities have been prepared so that these tasks can be accomplished in a manner that does not impact remedy protectiveness but reduces expenditure of energy or resources.

6.2.5 Metrics and Reporting

As discussed in Section 7.0 and as shown in Appendix 8 – Site Management Forms, information on energy usage, solid waste generation, transportation and shipping, water usage and land use and ecosystems will be recorded to facilitate and document consistent implementation of green remediation during site management and to identify corresponding benefits; a set of metrics has been developed.

6.3 Remedial System Optimization

A Remedial Site Optimization (RSO) study will be conducted any time that the NYSDEC or the remedial party requests in writing that an in-depth evaluation of the remedy is needed. An RSO may be appropriate if any of the following occur:

- The remedial actions have not met or are not expected to meet RAOs in the time frame estimated in the Decision Document;
- The management and operation of the remedial system is exceeding the estimated costs;
- The remedial system is not performing as expected or as designed;
- Previously unidentified source material may be suspected;
- Plume shift has potentially occurred;
- Site conditions change due to development, change of use, change in groundwater use, etc.;
- There is an anticipated transfer of the site management to another remedial party or agency; and
- A new and applicable remedial technology becomes available.

An RSO will provide a critique of a site's conceptual model, give a summary of past performance, document current cleanup practices, summarize progress made toward the site's cleanup goals, gather additional performance or media specific data and information and provide recommendations for improvements to enhance the ability of the present system to reach RAOs or to provide a basis for changing the remedial strategy.

7.0. REPORTING REQUIREMENTS

7.1 Site Management Reports

All site management inspection, maintenance and monitoring events will be recorded on the appropriate site management forms provided in Appendix 8. These forms are subject to NYSDEC revision.

All applicable inspection forms and other records, including media sampling data and system maintenance reports, generated for the site during the reporting period will be provided in electronic format to the NYSDEC in accordance with the requirements of Table 7.1 and summarized in the Periodic Review Report.

Table 7.1: Schedule of Interim Monitoring/Inspection Reports

Task/Report	Reporting Frequency*
EDD submittals for EQuIS	As needed
Tenant Notification for Exceedance of Air Guideline	As needed
Sewer Discharge Reports from GPTS sent to Monroe County Pure Waters	Monthly
Other Reports Upon NYSDEC Request	As needed

* The frequency of events will be conducted as specified until otherwise approved by the NYSDEC.

All interim monitoring/inspections reports will include, at a minimum:

- Date of event or reporting period;
- Name, company, and position of person(s) conducting monitoring/inspection activities;
- Description of the activities performed;

- Where appropriate, color photographs or sketches showing the approximate location of any problems or incidents noted (included either on the checklist/form or on an attached sheet);
- Type of samples collected (e.g., sub-slab vapor, indoor air, outdoor air, etc);
- Copies of all field forms completed (e.g., well sampling logs, chain-of-custody documentation, etc.);
- Sampling results in comparison to appropriate standards/criteria;
- A figure illustrating sample type and sampling locations;
- Copies of all laboratory data sheets and the required laboratory data deliverables required for all points sampled (to be submitted electronically in the NYSDEC-identified format);
- Any observations, conclusions, or recommendations; and
- A determination as to whether contaminant conditions have changed since the last reporting event.

Routine maintenance event reporting forms will include, at a minimum:

- Date of event;
- Name, company, and position of person(s) conducting maintenance activities;
- Description of maintenance activities performed;
- Any modifications to the system;
- Where appropriate, color photographs or sketches showing the approximate location of any problems or incidents noted (included either on the checklist/form or on an attached sheet); and,
- Other documentation such as copies of invoices for maintenance work, receipts for replacement equipment, etc., (attached to the checklist/form).

Non-routine maintenance event reporting forms will include, at a minimum:

- Date of event;
- Name, company, and position of person(s) conducting non-routine maintenance/repair activities;

- Description of non-routine activities performed;
- Where appropriate, color photographs or sketches showing the approximate location of any problems or incidents (included either on the form or on an attached sheet); and
- Other documentation such as copies of invoices for repair work, receipts for replacement equipment, etc. (attached to the checklist/form).

Data will be reported in digital format as determined by the NYSDEC. Currently, data is to be supplied electronically and submitted to the NYSDEC EQuIS™ database in accordance with the requirements found at this link http://www.dec.ny.gov/chemical/62440.html.

7.2 Periodic Review Report

A Periodic Review Report (PRR) will be submitted to the Department beginning sixteen (16) months after the Certificate of Completion is issued. After submittal of the initial PRR, the next PRR shall be submitted annually to the Department or at another frequency as may be required by the Department. In the event that the site is subdivided into separate parcels with different ownership, a single PRR will be prepared that addresses the site described in Appendix 1 -Environmental Easement. The report will be prepared in accordance with NYSDEC's DER-10 and submitted within 30 days of the end of each certification period. Media sampling results will also be incorporated into the Periodic Review Report. The report will include:

- Identification, assessment and certification of all ECs/ICs required by the remedy for the site.
- Results of the required annual site inspections and severe condition inspections, if applicable.
- All applicable site management forms and other records generated for the site during the reporting period in the NYSDEC-approved electronic format, if not previously submitted.

- A summary of any discharge monitoring data and/or information generated during the reporting period, with comments and conclusions.

- Data summary tables and graphical representations of contaminants of concern by media (groundwater, soil vapor, etc.), which include a listing of all compounds analyzed, along with the applicable standards, with all exceedances highlighted. These will include a presentation of past data as part of an evaluation of contaminant concentration trends.

- Results of all analyses, copies of all laboratory data sheets, and the required laboratory data deliverables for all samples collected during the reporting period will be submitted in digital format as determined by the NYSDEC. Currently, data is supplied electronically and submitted to the NYSDEC EQuIS™ database in accordance with the requirements found at this link: http://www.dec.ny.gov/chemical/62440.html.

- All information requested in Section 7.1 for interim monitoring/inspection reports, routine maintenance event reports, and non-routine maintenance event reports.

- A site evaluation, which includes the following:

  – The compliance of the remedy with the requirements of the site-specific RAWP, ROD or Decision Document;

  – The operation and the effectiveness of all treatment units, etc., including identification of any needed repairs or modifications;

  – Any new conclusions or observations regarding site contamination based on inspections or data generated by the Monitoring and Sampling Plan for the media being monitored;

  – Recommendations regarding any necessary changes to the remedy and/or Monitoring and Sampling Plan; and

  – Trends in contaminant levels in the affected media will be evaluated to determine if the remedy continues to be effective in achieving remedial goals as specified by the Decision Document.

  – The overall performance and effectiveness of the remedy.

- A performance summary for all treatment systems at the site during the calendar year, including information such as:

  – The number of days the system operated for the reporting period;

  – The contaminant mass removed;

- A description of breakdowns and/or repairs along with an explanation for any significant downtime;
- A description of the resolution of performance problems;
- Alarm conditions;
- Trends in equipment failure;
- A summary of the performance, effluent and/or effectiveness monitoring; and
- Comments, conclusions, and recommendations based on data evaluation.

7.2.1 Certification of Institutional and Engineering Controls

Following the last inspection of the reporting period, a Professional Engineer licensed to practice in New York State will prepare, and include in the Periodic Review Report, the following certification as per the requirements of NYSDEC DER-10:

"*For each institutional or engineering control identified for the site, I certify that all of the following statements are true:*

- *The inspection of the site to confirm the effectiveness of the institutional and engineering controls required by the remedial program was performed under my direction;*
- *The institutional control and/or engineering control employed at this site is unchanged from the date the control was put in place, or last approved by the Department;*
- *Nothing has occurred that would impair the ability of the control to protect the public health and environment;*
- *Nothing has occurred that would constitute a violation or failure to comply with any site management plan for this control;*
- *Access to the site will continue to be provided to the Department to evaluate the remedy, including access to evaluate the continued maintenance of this control;*

- *If a financial assurance mechanism is required under the oversight document for the site, the mechanism remains valid and sufficient for the intended purpose under the document;*
- *Use of the site is compliant with the environmental easement;*
- *The engineering control systems are performing as designed and are effective;*
- *To the best of my knowledge and belief, the work and conclusions described in this certification are in accordance with the requirements of the site remedial program and generally accepted engineering practices; and*
- *The information presented in this report is accurate and complete.*

I certify that all information and statements in this certification form are true. I understand that a false statement made herein is punishable as a Class "A" misdemeanor, pursuant to Section 210.45 of the Penal Law. I, [name], of [business address], am certifying as [Owner/Remedial Party or Owner's/Remedial Party's Designated Site Representative]: *[I have been authorized and designated by all site owners/remedial parties to sign this certification] for the site."*

At the end of each certifying period, as determined by the NYSDEC, the following certification will be provided to the Department:

"For each institutional identified for the site, I certify that all of the following statements are true:

- *The institutional control employed at this site is unchanged from the date the control was put in place, or last approved by the Department;*
- *Nothing has occurred that would impair the ability of the control to protect the public health and environment;*
- *Nothing has occurred that would constitute a violation or failure to comply with any site management plan for this control;*
- *Access to the site will continue to be provided to the Department to evaluate the remedy, including access to evaluate the continued maintenance of this control;*

- *If a financial assurance mechanism is required under the oversight document for the site, the mechanism remains valid and sufficient for the intended purpose under the document;*
- *Use of the site is compliant with the environmental easement.*
- *The information presented in this report is accurate and complete.*

I certify that all information and statements in this certification form are true. I understand that a false statement made herein is punishable as a Class "A" misdemeanor, pursuant to Section 210.45 of the Penal Law. I, [name], of [business address], am certifying as [Owner or Owner's Designated Site Representative] [and I have been authorized and designated by all site owners to sign this certification] for the site."

The signed certification will be included in the Periodic Review Report.

The Periodic Review Report will be submitted, in electronic format, to the NYSDEC Central Office, Regional Office in which the site is located and the NYSDOH Bureau of Environmental Exposure Investigation. The Periodic Review Report may need to be submitted in hard-copy format, as requested by the NYSDEC project manager.

7.3 Corrective Measures Work Plan

If any component of the remedy is found to have failed, or if the periodic certification cannot be provided due to the failure of an institutional or engineering control, a Corrective Measures Work Plan will be submitted to the NYSDEC for approval. This plan will explain the failure and provide the details and schedule for performing work necessary to correct the failure. Unless an emergency condition exists, no work will be performed pursuant to the Corrective Measures Work Plan until it has been approved by the NYSDEC.

7.4 Remedial Site Optimization Report

In the event that an RSO is to be performed (see Section 6.3, upon completion of an RSO, an RSO report must be submitted to the Department for approval. A general outline for the RSO report is provided in Appendix 10. The RSO report will document the research/ investigation and data gathering that was conducted, evaluate the results and facts obtained, present a revised conceptual site model and present recommendations. RSO recommendations are to be implemented upon approval from the NYSDEC. Additional work plans, design documents, HASPs etc., may still be required to implement the recommendations, based upon the actions that need to be taken. A final engineering report and update to the SMP may also be required.

The RSO report will be submitted, in electronic format, to the NYSDEC Central Office, Regional Office in which the site is located, Site Control and the NYSDOH Bureau of Environmental Exposure Investigation.

8.0 REFERENCES

6NYCRR Part 375, Environmental Remediation Programs. December 14, 2006.

NYSDEC DER-10 – "Technical Guidance for Site Investigation and Remediation".

NYSDEC, 1998. Ambient Water Quality Standards and Guidance Values and Groundwater Effluent Limitations Division of Water Technical and Operational Guidance Series (TOGS) 1.1.1. June 1998 (April 2000 addendum).

TABLES

Table 2.5.1A

Soil Management Plan
690 St. Paul Street, Rochester, New York
NYSDEC BCP ID No. C828159
Summary of Volatile Organic Compounds with Exceedances in Soil by Areas of Concern
All Results in Parts per Million

Sample ID (Depth)	690-SB-18 (4.0'-4.6')-O	690-SB-85 (4.0'-8.0') -O	690-SB-85 (4.0'-5.2')-D	690-BW-05 (2.0'-4.0')-O	690-SB-26 (8.0'-11.3')-O	AOC2-CS-08 (11'5")	AOC2-CS-13 (11')	AOC2-CS-14 (11')	690-SB-49 (0.6'-1.3')-O	690-SB-78 (7.2'-8.0')-O	AOC-6-C NW Sidewall (7.5')	CS-5-R2 (6.5'-7.0')	CS-12-R	CS-ELECT	690-SB-71 (8.0'-11.3')	690-SB-106A (8.0'-11.9')-O	690-SB-122 (8.0'-11.0')-O	690-SB-125 (10.0'-10.4')-O	690-TP-TCE-01-N. Wall	690-TP-TCE-01-S. Wall	690-TP-TCE-03 11.5'	NYCRR Subpart 375-6 Remedial Program Soil Cleanup Objectives for the Protection of Groundwater	NYCRR Subpart 375-6 Remedial Program Soil Cleanup Objectives for the Protection of Public Health: Unrestricted Use	NYCRR Subpart 375-6 Remedial Program Soil Cleanup Objectives for the Protection of Public Health: Restricted Residential Use
Sample Collection Date	3/24/2010	6/25/2010	6/25/2010	10/20/2010	6/24/2010	8/8/2012	8/21/2012	8/21/2012	9/28/2010	9/27/2010	7/20/2012	9/2/2008	8/30/2008	8/28/2008	9/23/2010	10/7/2010	10/7/2010	10/19/2010	7/9/12	7/9/12	7/11/12			
Area of Concern	AOC #1				AOC #2				AOC #5	AOC #6C					AOC #8									
Compound																								
Vinyl chloride	ND J	ND	ND	0.0282 E	ND	ND	ND	ND	ND	ND	ND	ND	ND	ND	ND	ND	ND	ND	ND	ND	ND	0.020	0.020	0.9
Methylene chloride	ND J	ND	ND	ND	ND	ND	ND	ND	0.029	ND	ND	ND	ND	ND	ND	0.002 J	ND	ND	ND	ND	ND	0.50	0.50	100
cis-1,2-dichloroethene	0.0011 J	0.0082	0.0092	0.01 D	ND	ND	ND	ND	ND	ND	ND	ND	ND	ND	ND	0.0056	0.0012 J	0.0028 J	ND	0.00315 J	0.00812 J	0.25	0.25	100
Trichloroethene	ND	0.035 D	0.036 D	0.04 D	ND	ND	ND	ND	ND	ND	ND	ND	ND	ND	*0.5*	*0.7* D	*0.4* D	*0.4* D	0.0806	0.25	0.804	0.47	0.47	21
Tetrachloroethene	0.0007 J	0.0026	0.0021	0.0062	ND	ND	ND	ND	ND	ND	ND	ND	ND	ND	ND	ND	ND	ND	ND	ND	ND	1.3	1.3	19
Toluene	ND	ND	ND	ND	ND	ND	0.515	0.108	ND	ND	ND	ND	ND	0.745	ND	ND	ND	ND	ND	ND	ND	0.7	0.7	100
Ethylbenzene	ND J	0.0024 J	0.0028 J	0.0061 J	1.1 D	0.232	1.3	0.241	ND	0.035	ND	0.202	ND	4.21	ND	ND	ND	ND	ND	ND	ND	1	1	41
Xylene (total)	ND J	0.0023 J	0.0025 J	0.0102 J	1.1 D	0.9794 J	5.782	1.0663	ND	0.5	2.466	11.8	ND	32.93 E	ND	ND	ND	ND	ND	ND	ND	1.6	0.26	100
1,3,5-Trimethylbenzene	ND J	ND	ND	0.0035 J	0.24 D	2.650	1.140	0.166	ND	0.1	0.138	0.794	0.0969	1.160	ND	ND	ND	ND	NA	NA	ND	8.4	8.4	52
1,2,4-Trimethylbenzene	ND J	ND	ND	0.0062 J	0.24 D	4.880	2.0	0.337	ND	0.260	0.237	2.48	ND	2.330	ND	ND	ND	ND	NA	NA	0.00646 J	3.6	3.6	52
Acetone	ND J	0.0012 J	0.0012 J	0.0014 J	ND J	ND	ND	0.301	*0.077*	0.017 J	ND	ND	0.0535	ND	ND	0.0046 J	0.0035 J	ND	ND	ND	0.205 J	0.50	0.50	100
Carbon disulfide	ND J	ND	ND	0.0074	ND	ND	ND	ND	ND	ND	ND	ND	ND	ND	ND	ND	ND	ND	ND	ND	0.00601 J	Not Listed	Not Listed	Not Listed
n-Butylbenzene	ND	ND	ND	ND	ND	ND	ND	ND	ND	ND	ND	ND	ND	0.320	ND	ND	ND	ND	ND	ND	ND	100	12	100
sec-Butylbenzene	ND	ND	ND	ND	ND	0.133	0.0376 J	ND J	ND	ND	ND	ND	ND	0.158	ND	ND	ND	ND	ND	ND	ND	11	11	100
n-Propylbenzene	ND	ND	ND	ND	ND	0.924	0.265	0.0640	ND	ND	ND	ND	ND	0.869	ND	ND	ND	ND	ND	ND	ND	3.9	3.9	100
Isopropylbenzene	ND	ND	ND	ND	ND	0.599	0.241	0.0608	ND	ND	ND	ND	ND	1.03	ND	ND	ND	ND	ND	ND	ND	100*	100*	100*
1,1-Dichloroethane	ND	ND	ND	ND	ND	ND	ND	ND	ND	ND	ND	ND	ND	0.147	ND	ND	ND	ND	ND	ND	ND	0.27	0.27	26
1,1,1-Trichloroethane	ND	ND	ND	ND	ND	ND	ND	ND	ND	ND	ND	ND	ND	0.0835	ND	ND	ND	ND	ND	ND	ND	0.68	0.68	100
Naphthalene	ND J	0.0012 J	0.0012 J	0.0025 J	ND J	ND	0.139 J	ND	ND	0.015 J	ND	0.881	ND	1.040	ND	ND	ND	ND	NA	NA	NA	12	12	100
Total VOCs	0.0018	0.1149	0.1198	0.2855	2.34	10.397	11.420	2.344	0.106	0.947	2.841	16.157	0.1504	45.0225	0.5	0.7522	0.3847	0.2085	0.0806	0.25315	1.02959			
Total VOC TICs	0.0012 NJ	0.0744 J	0.0798 J	0.2385 J	356.048 NJ	38.120	30.815	5.394	None Detected	4.660 N,J	27.141	NA	NA	NA	NA	None Detected	None Detected	None Detected	None Detected	None Detected	None Detected	*Not Available*	*Not Available*	*Not Available*
Total VOCs & VOC TICs	0.0030	0.1893	0.1996	0.5240	358.388	48.518	42.235	7.738	0.106	5.607	29.982	16.157	0.1504	45.0225	0.500	0.7522	0.3847	0.2085	0.0806	0.25315	0.81212			

Notes:
VOC analysis by United States Environmental Protection Agency (USEPA) Method SW846 8260B.
ND indicates that the compound was analyzed for, but not detected at or above the Contract Required Quantitation Limit (CRQL), or the compound was not detected due to qualification through the method or field blank. CRQLs are shown in Tables corresponding to sample matrix (i.e., surface soil samples in Table 1, test pit soil samples in Table 2, etc.).
J = Estimated value – The analyte was positively identified; but the associated numerical value is the approximate concentration of the analyte in the sample.
B = Denotes that the analyte was detected in the associated blank, as well as in the sample.
NA = Not Applicable or Not Available
PPM = Parts Per Million = mg/kg
Indicates Mobile Laboratory Data
Indicates sample is a DUPLICATE sample.
Highlighted values indicate exceedance of the NYCRR Subpart 375-6 Remedial Program Soil Cleanup Objectives for the Protection of Public Health: Unrestricted Use.
Bold values indicate exceedance of the NYCRR Subpart 375-6 Remedial Program Soil Cleanup Objectives for the Protection of Public Health: Restricted Residential Use.
Denotes soil removed during IRM Activities or during Test Pitting Activities.
*Denotes Part 375 SCO not available; lowest NYSDEC CP-51 SSCO shown for comparison purposes.

Table 2.5.1B

Soil Management Plan
690 St. Paul Street, Rochester, New York
NYSDEC BCP ID No. C828159
Summary of SVOCs with Exceedances in Soil by Areas of Concern
All Results in Parts per Million

Sample ID (Depth)	690-SB-42 (1.0'-4.0')-O	690-SB-45 (0.8'-3.0')-O	690-SB-55 (0.6'-1.4')-O	690-SB-65 (4.0'-5.5')-D	690-SS-2 (0-2")-O	690-SB-77 (0.0'-4.0')-O	AOC6D-080312 W. Sidewall (4')	AOC6D-CS-080912 - S. Sidewall (3.5')	NYCRR Subpart 375-6 Remedial Program Soil Cleanup Objectives for the Protection of Groundwater	NYCRR Subpart 375-6 Remedial Program Soil Cleanup Objectives for the Protection of Public Health: Unrestricted Use	NYCRR Subpart 375-6 Remedial Program Soil Cleanup Objectives for the Protection of Public Health: Restricted Residential Use
Sample Collection Date	6/23/2010	6/23/2010	9/28/2010	6/24/2010	12/28/09	3/24/10	8/3/12	8/9/12			
Area of Concern	AOC #5			AOC #6	AOC #6A	AOC #6D					
Compound											
Benzo(a)anthracene	0.54	***41*** ***D***	***1.6***	***2.9***	~~1.900~~	~~1.8~~	0.844 J	**2.390**	1	1	1
Chrysene	0.56	***44*** ***D***	**1.6**	***3.4***	~~2.000~~	~~2.0~~	0.898 J	**2.460**	1	1	4
Bis(2-ethylhexyl)phthalate	ND<0.380	ND<0.400	ND<0.430	ND<390	~~0.430~~ J	~~0.43~~ J	ND<1.590	ND<1.520	NL	NL	435
Benzo(b)fluoranthene	0.72	***56*** ***D***	*1.1*	***3.0***	~~2.900~~	~~2.9~~	0.833 J	**2.550**	2	1	1
Benzo(k)fluoranthene	0.71	***29*** ***D***	0.62	*2.7*	~~1.200~~	~~0.68~~	0.935 J	**2.290**	2	0.8	1
Benzo(a)pyrene	0.83	***45*** ***D***	0.78	*2.6*	~~2.200~~	~~1.7~~	0.945 J	**2.780**	22	1	1
Indeno(1,2,3-cd)pyrene	0.53	***25*** ***D***	0.32 J	*1.6*	~~1.600~~	~~1.4~~	ND<1.590	**2.180** J	8	0.5	0.5
Dibenzo(a,h)anhracene	0.21 J	*4.5* *DJ*	0.12 J	0.64	~~0.550~~ J	~~0.5~~ J	ND<1.590	ND<1.520	1,000	0.33	0.33
Total SVOCs	4.100	244.500	6.140	16.840	~~14.580~~	~~10.460~~	4.455	14.650	*Not Applicable*	*Not Applicable*	*Not Applicable*
Total SVOC TICs	1.770 NJ	9.410 NJ	10.430 N,J	10.55 NJ	~~11.630~~	~~6.650~~ NJ	2.092	4.881			
Total SVOCs & SVOC TICs	5.870	253.910	16.570	27.390	~~26.200~~	~~17.110~~	6.547	19.531			

Notes:
SVOC analysis by United States Environmental Protection Agency (USEPA) Method SW846 8270.
ND indicates that the compound was analyzed for, but not detected at or above the Contract Required Quantitation Limit (CRQL), or the compound was not detected due to qualification through the method or field blank.
to qualification through the method or field blank.
D - indicates all compounds identified in an anlaysis at the secondary dilution factor.
J = Estimated value – The analyte was positively identified; but the associated numerical value is the approximate concentration of the analyte in the sample.
NL = Not Listed
All Results in Parts per Million
Indicates sample is a DUPLICATE sample.
Highlighted values indicate exceedance of the NYCRR Subpart 375-6 Remedial Program Soil Cleanup Objectives for the Protection of Public Health: Unrestricted Use.
Bold values indicate exceedance of the NYCRR Subpart 375-6 Remedial Program Soil Cleanup Objectives for the Protection of Public Health: Restricted Residential Use.
~~Denotes soil removed during IRM Activities or during Test Pitting Activities.~~

Table 2.5.1C

Soil Management Plan
690 St. Paul Street, Rochester, New York
NYSDEC BCP ID No. C828159
Summary of Metals in Soil with Exceedances by Areas of Concern
All Results in Parts per Million

Sample ID (Depth)	690-SG-2 (4.0'-7.9')-O	690-SB-24 (0.4'-3.5')-O	Backfill 07302012 - COMP - A	Backfill 07302012 - COMP - B	AOC2 - Backfill Comp-C	AOC2 - Backfill Comp-D	690-SS-3 (2"-2')-O	690-SB-32 (1.2-2.0')-O	690-SB-34 (0.5'-1.4')-O	690-SS-4 (2"-2')-O	690-SB-22 (2.0'-3.2')-O	690-SB-23 (4.0-6.0')-O	690-SS-2 (2"-2')-O	690-SB-73 (0.4'-4.0')-O	NYCRR Subpart 375-6 Remedial Program Soil Cleanup Objectives for the Protection of Groundwater	NYCRR Subpart 375-6 Remedial Program Soil Cleanup Objectives for the Protection of Public Health: Unrestricted Use	NYCRR Subpart 375-6 Remedial Program Soil Cleanup Objectives for the Protection of Public Health: Restricted Residential Use
Sample Collection Date	6/24/2010	9/22/2010	7/30/2012	7/30/2012	8/13/2012	8/13/2012	12/28/09	6/23/2010	9/28/2010	12/28/09	9/22/2010	6/22/2010	12/28/09	9/23/10			
Area of Concern	AOC #1	AOC #2					AOC #3	AOC #5		AOC #6			AOC #6A	AOC #6B			
Compound																	
Aluminum	7,670 J	3,410	4,300	7,670	15,500	5,320	4,630 E	586	4100	3,290 E	7,420 E	5,440	~~4,460~~ E	~~3,980~~		10,000 [1]	
Calcium	10,800	119,000	72,200	55,500	3,430	117,000	81,800	81,200	86,200	63,200	99,800	111,000	~~74,500~~	~~18,600~~		10,000 [1]	
Copper	27.3 J	116	16.7	14.7	23.3	37.7	99.9	1.2 J	16.0	91.3	20.2	20.7	~~31.2~~	~~116~~	1,720	50	270
Iron	23,100	10,900 E	13,400	13,800	32,500	11,600	19,400 E	4,250 J	13,800 E	9,590 E	11,100 E	10,600	~~20,600~~ E	~~12,300~~		2,000 [2]	
Lead	12.5 J	60.2	24.9	54.2	16.4	46.6	58.2	3.7 J	14.6	65.3	52.1	81.5 J	~~136~~ E	~~1,490~~	450	63	400
Manganese	1,800 J	318 E	342	311	2,340	461	456	168	278 E	254 E	736 E	347	~~318~~	~~226~~	2,000	1,600	2,000
Mercury	0.018 J	0.059	0.0184	0.137	0.0247	0.0208	0.18	0.29 J	0.024	0.11	0.059	0.054 J	~~0.12~~	~~0.25~~	0.73	0.18	0.81
Nickel	15.5 J	9.4 E	6.96	8.91	25.1	8.44	9.9 E	1.2 J	50.3 E	11.8 E	7.9 E	8.4 J	~~9.7~~ E	~~10.2~~ E	130	30	310
Zinc	56.1 J	78.6 E	38.3	61.2	78.3	86.2	108	ND<1.3	43.7 E	100	181 E	58.5 J	~~205~~ NE	~~401~~ E	2,480	109	10,000

Notes:
TAL Metals analysis by United States Environmental Protection Agency (USEPA) SW846 Methods 6010 (TAL Metals) and 7471 (Mercury)
J – Indicates that the constituent was positively identified; but the associated numerical value is the approximate concentration of the constituent in the sample.
N - indicates spiked sample recovery not within control limits.
E - indicates a value estimated or not reported due to the presence of interferences.
B - denotes that a "trace" concentration was detected below the reporting limit and equal to or above the detection limit.
Highlighted type indicates that the constituent was detected at a concentration above the NYCRR Subpart 375-6 Remedial Program Soil Cleanup Objectives for the Protection of Public Health: Unrestricted Use
Bold type indicates a concentration above the NYCRR Subpart 375-6 Remedial Program Soil Cleanup Objectives for the Protection of Public Health: Restricted Residential Use.
Italicized type indicates a concentration above the NYCRR Subpart 375-6 Remedial Program Soil Cleanup Objectives for the Protection of Groundwater.
PPM = Parts per Million = mg/kg
Indicates sample is a DUPLICATE of the sample preceeding this sample.
~~Denotes soil removed during IRM Activities or during Test Pitting Activities.~~
[1]Indicates no Part 375 value for indicated compound; NYSDEC SSCO Protection of Ecological Resources value shown
[2]Indicates no Part 375 value for indicated compound; NYSDEC SSCO Residential value shown
The above table does not include samples in which concentrations of cobalt, calcium and iron have been identified above the appropriate CP-51 SSCO. Cobalt was identified at a concentration above the CP-51 SSCO for Residential Use in samples SB-34 and SB-49; calcium was identified at concentrations above the CP-51 SSCO for Protection of Ecological Resources in ALL soil samples analyzed for metals EXCEPT SS-1, SS-3 and SB-59; and, iron was detected at concentrations above the CP-51 SSCO for Residential Use for all soil samples analyzed for metals. These data are shown in Tables corresponding to sample matrix (i.e., surface soil samples in Table 1, test pit soil samples in Table 2, etc.).

Table 2.5.1D

Soil Management Plan
690 St. Paul Street, Rochester, New York
NYSDEC BCP No. C828159
Summary of Detected Pesticides in Soil with Exceedances by Areas of Concern
All Results in Parts per Million

Sample ID (Depth)	690-TP-F-O (3.0')	690-SB-18 (4.0'-4.6')-O	AOC #1 - CS-5	690-SB-28 (4.0-8.0')-O	690-SB-35 (0.6-3.9')-O	690-SS-4 (2"-2')-O	690-SS-8 (2"-2')-O	690-SS-6 (0-2")-O	NYCRR Subpart 375-6 Remedial Program Soil Cleanup Objectives for the Protection of Groundwater	NYCRR Subpart 375-6 Remedial Program Soil Cleanup Objectives for the Protection of Public Health: Unrestricted Use	NYCRR Subpart 375-6 Remedial Program Soil Cleanup Objectives for the Protection of Public Health: Restricted Residential Use
Sample Collection Date	12/28/09	3/24/2010	11/17/2011	6/22/10	6/23/10	12/28/09	12/28/09	12/28/09			
Area of Concern	AOC #1			AOC #3	AOC #5	AOC #6		AOC #6D			
Compound											
4,4'-DDE	ND<0.0037	~~0.0054~~	ND<0.0035 U	ND<0.0038	ND<0.0033	ND<0.0035	ND<0.0036	ND<0.0037	17	0.0033	8.9
Endrin	ND<0.0037	~~ND<0.0039~~	ND<0.0035 U	ND<0.0038	ND<0.0033	ND<0.0035	ND<0.0036	ND<0.0037	0.06	0.014	11
Endosulfan II	ND<0.0037	~~ND<0.0039~~	ND<0.0035 U	ND<0.0038	0.007 P	ND<0.0035	0.0085 J	ND<0.0037	102	2.4	24
4,4'-DDD	0.022 P	~~0.0041~~ J	ND<0.0035 U	0.011	ND<0.0033	ND<0.0035	ND<0.0036	ND<0.0037	14	0.0033	13
Endosulfan sulfate	ND<0.0037	~~ND<0.0039~~	ND<0.0035 U	ND<0.0038	ND<0.0033	0.0039 P	ND<0.0036	ND<0.0037	1,000	2.4	24
4,4'-DDT	0.016	~~0.0160~~	0.0045	ND<0.0038	0.0045	0.0110 P	0.011	0.0042	136	0.0033	7.9
Total Pesticides	0.0380	~~0.029~~	0.005	0.011	0.011	0.01490	0.0195	0.0042	Not Applicable		

Notes:

Pesticide analysis by United States Environmental Protection Agency (USEPA) Method SW846 8081.

ND indicates that the compound was analyzed for, but not detected at or above the Contract Required Quantitation Limit (CRQL), or the compound was not detected due to qualification through the method or field blank.

J = Estimated value – The analyte was positively identified; but the associated numerical value is the approximate concentration of the analyte in the sample.

P = Used for CLP methodology only. For pesticide analytes, when a difference for detected concentrations between the two GC columns is greater than 25%, the lower of the two values is reported on the data page and flagged with a "P".

NA = Not Applicable or Not Available

Highlighted type indicates that the constituent was detected at a concentration above the Part 375-6 Protection of Public Health: Unrestricted Use.

Indicates sample is a DUPLICATE of the sample preceeding this sample.

~~Denotes soil removed during IRM Activities or during Test Pitting Activities.~~

Table 2.5.1E

Soil Management Plan
690 St. Paul Street, Rochester, New York
NYSDEC BCP ID No. C828159
Summary of Polychlorinated Biphenyls in Soil with Exceedances by Areas of Concern
All Results in Parts per Million

Sample ID (Depth)	690-TP-F-O (3.0')	690-SB-18 (4.0'-4.6')-O	690-SB-43 (0.6'-3.5')-O	690-SB-89-O	690-SB-31 (0.5'-1.5')-O	690-SS-4 (2"-2')-O	690-SS-8 (2"-2')-O	690-SB-104 (2"-2')-O	NYCRR Subpart 375-6 Remedial Program Soil Cleanup Objectives for the Protection of Groundwater	NYCRR Subpart 375-6 Remedial Program Soil Cleanup Objectives for the Protection of Public Health: Unrestricted Use	NYCRR Subpart 375-6 Remedial Program Soil Cleanup Objectives for the Protection of Public Health: Restricted Residential Use
Sample Collection Date	12/28/09	3/24/2010	9/28/10	9/26/10	9/28/10	12/28/09	12/28/09	10/5/10			
Area of Concern	AOC #1		AOC #4	AOC #5		AOC #6					
Compound											
Aroclor 1254	0.260	~~0.210~~	0.150	0.160	0.130	ND<0.035	ND<0.036	ND<0.040	N/A	N/A	N/A
Aroclor 1260	ND<0.037	~~ND<0.039~~	ND<0.037	ND<0.033	ND<0.041	0.190	0.260 J	0.110	N/A	N/A	N/A
Total PCBs	0.260	~~0.210~~	0.150	0.160	0.130	0.190	0.260	0.110	3.2	0.1	1

Notes:

PCB analysis by United States Environmental Protection Agency (USEPA) Method SW846 8082.

J = Estimated value – The analyte was positively identified; but the associated numerical value is the approximate concentration of the analyte in the sample.

Highlighted type indicates that the constituent was detected at a concentration above the Part 375-6 Protection of Public Health: Unrestricted Use.

indicates sample is a DUPLICATE of the sample preceeding this sample.

~~Denotes soil removed during IRM Activities or during Test Pitting Activities.~~

Table 2.5.2A
690 Saint Paul Street
NYSDEC Brownfield Cleanup Program - Soil Management Plan
NYSDEC BCP ID No. C828159

Summary of Detected Volatile Organic Compounds in Dedicated Monitoring Well Groundwater Samples
Results in Micrograms per Liter (µg/L) or Parts Per Billion (PPB)

Sample ID	Groundwater Samples																NYSDEC Part 703 Groundwater Standards and TOGS 1.1.1 Guidance Values
	690-MW-03	690-MW-05	690-MW-05	690-MW-06	690-MW-06	690-MW-07	690-MW-08	690-MW-09	690-MW-10	690-MW-11	REC-B-EAST	REC-B-EAST	REC-B-WEST	690-REC-B-W	***RECN+S (Oil)	
Area of Concern	AOC #1	AOC #2	AOC #2	AOC #3/ #8	AOC #3/ #8	AOC #8	AOC #8	AOC #2	AOC #2	AOC #6C	AOC #6	AOC #6	AOC #6	AOC #6	AOC #6	
Sample Interval**	~2.2'-7.2' BGS	6.7'-11.7' BGS	6.7'-11.7' BGS	5.3'-10.3' BGS	5.3'-10.3' BGS	1.9'-11.9' BGS	1.8'-11.8' BGS	6.25'-11.25' BGS	6.30'-11.30' BGS	4.12'-9.12' BGS	1.5'-8.0' BGS	1.5'-8.0' BGS	1.5'-8.5' BGS	1.5'-8.5' BGS	~7'-9' BGS	
Sample Collection Date	9/14/2010	9/14/2010	1/18/2013	9/14/2010	11/2/2012	11/2/2012	11/5/2012	11/1/2012	11/1/2012	11/1/2012	4/19/2012	10/30/2012	4/19/12	11/2/2012	11/11/2010	
Volatile Organic Compounds																
Chloromethane	5.0 U	5.0 U	5.0 U	5.0 U	5.0 U	5.0 U	5.0 U	5.0 U	5.0 U	5.0 U	5.0 U	5.0 U	5.0 U	5.0 U	13,000 U	5
Vinyl chloride	5.0 U	5.0 U	5.0 U	5.0 U	5.0 U	5.0 U	5.0 U	5.0 U	5.0 U	5.0 U	5.0 U	5.0 U	5.0 U	2.6 J	13,000 U	2
1,1-Dichloroethene	5.0 U	5.0 U	5.0 U	5.0 U	5.0 U	1.6 J	5.0 U	5.0 U	5.0 U	5.0 U	5.0 U	5.0 U	5.0 U	5.0 U	13,000 U	5
Acetone	5.0 U	5.0 U	5.0 U	5.0 U	5.0 U	5.0 U	5.0 U	5.0 U	5.0 U	12	5.0 U	5.0 U	5.0 U	5.0 U	13,000 U	50
Carbon disulfide	5.0 U	5.0 U	5.0 U	5.0 U	5.0 U	5.0 U	5.0 U	1.1 J	5.0 U	1.7 J	5.0 U	5.0 U	5.0 U	5.0 U	13,000 U	60*
Methylene chloride	5.0 U	5.0 U	5.0 U	5.0 U	5.0 U	5.0 U	5.0 U	5.0 U	5.0 U	5.0 U	5.0 U	5.0 U	5.0 U	5.0 U	13,000 U	5
trans-1,2-dichloroethene	5.0 U	5.0 U	5.0 U	5.0 U	5.0 U	6.0	5.0 U	5.0 U	5.0 U	5.0 U	5.0 U	5.0 U	5.0 U	5.0 U	13,000 U	5
Methyl tert-butyl ether	5.0 U	5.0 U	5.0 U	5.0 U	5.0 U	5.0 U	5.0 U	5.0 U	5.0 U	5.0 U	5.0 U	5.0 U	5.0 U	5.0 U	13,000 U	10
1,1-Dichloroethane	5.0 U	5.0 U	5.0 U	5.0 U	5.0 U	5.0 U	5.0 U	5.0 U	5.0 U	5.0 U	5.0 U	5.0 U	5.0 U	5.0 U	13,000 U	5
2-Butanone	5.0 U	5.0 U	5.0 U	5.0 U	5.0 U	5.0 U	5.0 U	5.0 U	5.0 U	2.5 J	5.0 U	5.0 U	5.0 U	5.0 U	13,000 U	50
cis-1,2-dichloroethene	2.9 J	5.0 U	5.0 U	5.0 U	5.0 U	100	5.0 U	5.0 U	5.0 U	5.0 U	5.0 U	0.78 J	2.0 J	5.0 U	13,000 U	5
Chloroform	5.0 U	5.0 U	5.0 U	5.0 U	5.0 U	5.0 U	5.0 U	5.0 U	5.0 U	1.3 J	5.0 U	5.0 U	5.0 U	5.0 U	13,000 U	7
Chloroethane	5.0 U	5.0 U	5.0 U	5.0 U	5.0 U	5.0 U	5.0 U	5.0 U	5.0 U	5.0 U	2.6 J	5.0 U	5.0 U	9.9	13,000 U	5
1,2-Dichloroethane	5.0 U	5.0 U	5.0 U	5.0 U	5.0 U	5.0 U	5.0 U	5.0 U	5.0 U	5.0 U	5.0 U	5.0 U	5.0 U	5.0 U	13,000 U	0.6
Benzene	5.0 U	5.0 U	5.0 U	5.0 U	5.0 U	5.0 U	5.0 U	5.0 U	5.0 U	5.0 U	5.0 U	5.0 U	5.0 U	5.0 U	13,000 U	1
Trichloroethene	23	5.0 U	5.0 U	8.7	32	5,800 D	29	1.8 J	4.3 J	2.9 J	5.0 U	5.0 U	5.0 U	5.0 U	13,000 U	5
Toluene	5.0 U	5.0 U	5.0 U	5.0 U	5.0 U	5.0 U	5.0 U	5.0 U	5.0 U	5.0 U	5.0 U	4.6 J	5.0 U	5.0 U	13,000 U	5
1,1,2-Trichloroethane	5.0 U	5.0 U	5.0 U	5.0 U	5.0 U	5.0 U	5.0 U	5.0 U	5.0 U	5.0 U	5.0 U	5.0 U	5.0 U	5.0 U	13,000 U	1
Tetrachloroethene	5.0 U	5.0 U	5.0 U	5.0 U	5.0 UJ	5.0 U	5.0 UJ	5.0 U	5.0 U	5.0 U	5.0 U	5.0 U	5.0 U	5.0 UJ	13,000 U	5
Ethylbenzene	5.0 U	5.0 U	5.0 U	5.0 U	5.0 U	5.0 U	5.0 U	5.0 U	5.0 U	5.0 U	5.0 U	5.0 U	5.0 U	5.0 U	13,000 U	5
m,p-Xylene	5.0 U	5.0 U	5.0 U	5.0 U	5.0 U	5.0 U	5.0 U	5.0 U	5.0 U	5.0 U	5.0 U	5.0 U	5.0 U	5.0 U	13,000 U	5
o-Xylene	5.0 U	5.0 U	5.0 U	5.0 U	5.0 U	5.0 U	5.0 U	5.0 U	5.0 U	5.0 U	5.0 U	5.0 U	5.0 U	5.0 U	13,000 U	5
Bromoform	NA	NA U	NA U	NA	5.0 UJ	5.0 U	5.0 U	5.0 U	5.0 U	5.0 U	NA	5.0 U	NA	5.0 UJ	13,000 U	50*
Isopropylbenzene	5.0 U	5.0 U	5.0 U	5.0 U	5.0 U	5.0 U	5.0 U	5.0 U	5.0 U	5.0 U	5.0 U	5.0 U	5.0 U	5.0 U	13,000 U	5
n-Propylbenzene	5.0 U	5.0 U	5.0 U	5.0 U	5.0 U	5.0 U	5.0 U	5.0 U	5.0 U	5.0 U	5.0 U	5.0 U	5.0 U	5.0 U	13,000 U	5
1,3,5-Trimethylbenzene	5.0 U	5.0 U	5.0 U	5.0 U	5.0 U	5.0 U	5.0 U	5.0 U	5.0 U	5.0 U	5.0 U	5.0 U	5.0 U	5.0 U	13,000 U	5
tert-Butylbenzene	5.0 U	5.0 U	5.0 U	5.0 U	5.0 U	5.0 U	5.0 U	5.0 U	5.0 U	5.0 U	5.0 U	5.0 U	5.0 U	5.0 U	13,000 U	5
1,2,4-Trimethylbenzene	5.0 U	5.0 U	5.0 U	5.0 U	5.0 U	5.0 U	5.0 U	5.0 U	5.0 U	5.0 U	5.0 U	5.0 U	5.0 U	5.0 U	7,100 J	5
sec-Butylbenzene	5.0 U	5.0 U	5.0 U	5.0 U	5.0 U	5.0 U	5.0 U	5.0 U	5.0 U	5.0 U	5.0 U	5.0 U	5.0 U	5.0 U	13,000 U	5
4-Isopropyltoluene	5.0 U	5.0 U	5.0 U	5.0 U	5.0 U	5.0 U	5.0 U	5.0 U	5.0 U	5.0 U	5.0 U	5.0 U	5.0 U	5.0 U	13,000 U	5
n-Butylbenzene	5.0 U	5.0 U	5.0 U	5.0 U	5.0 U	5.0 U	5.0 U	5.0 U	5.0 U	5.0 U	5.0 U	5.0 U	5.0 U	5.0 U	13,000 U	5
1,2-Dichlorobenzene	5.0 U	5.0 U	5.0 U	5.0 U	5.0 U	5.0 U	5.0 U	5.0 U	5.0 U	5.0 U	5.0 U	5.0 U	5.0 U	5.0 U	13,000 U	3
Naphthalene	5.0 U	5.0 U	5.0 U	5.0 U	5.0 U	5.0 U	5.0 U	5.0 U	5.0 U	5.0 U	5.0 U	5.0 U	5.0 U	5.0 U	13,000 U	10
Total VOCs	26	None Detected	None Detected	8.7	32	5,907.6	29.0	2.9	4.3	20.4	2.6	5.4	2.0	12.5	7,100	
Total VOC TICs	None Detected	None Detected	None Detected	None Detected	11	None Detected	8.8 J	None Detected	None Detected	9.6	None Detected	None Detected	None Detected	15.9 NJ	749,000	*Not Available*
Total VOCs & VOC TICs	26	None Detected	None Detected	8.7	43	5,907.6	37.8	2.9	4.3	30.0	2.6	5.4	2.0	28.4	756,100	

Notes:
VOC analysis by United States Environmental Protection Agency (USEPA) Method SW846 8260B.
J – Indicates that the constituent was positively identified; but the associated numerical value is the approximate concentration of the constituent in the sample.
D - Indicates that the value was obtained from a secondary dilution anaylsis.
U - Indicates that the constituent was not detected.
E - Indicates the compound concentration exceeded the calibration range.
NA = Not Applicable or Not Available
**Refers to screened interval or length of open rock, depending on well construction.
***This is a sample of product and is not representative of VOC concentrations in dissolved groundwater. Recovery wells RW-West and RW-East were previously designated REC-N and REC-S.
Highlighted type indicates that the constituent was detected at a concentration above the NYSDEC Part 703 Groundwater Standards or TOGS 1.1.1.
Indicates sample is a DUPLICATE of the sample preceding this sample.
* Indicates value is from Division of Water Techinical and Operational Guidance Series (TOGS 1.1.1)

Table 2.5.2A
690 Saint Paul Street
NYSDEC Brownfield Cleanup Program - Soil Management Plan
NYSDEC BCP ID No. C828159

Summary of Detected Volatile Organic Compounds in Dedicated Monitoring Well Groundwater Samples
Results in Micrograms per Liter (µg/L) or Parts Per Billion (PPB)

Sample ID	Groundwater Samples														NYSDEC Part 703 Groundwater Standards and TOGS 1.1.1 Guidance Values
	690-BW-01	***BW-01 (Oil)	BW-01	690-BW-01	690-BW-02	690-BW-02 (DUPLICATE)	690-BW-02	690-BW-03	690-BW-03	690-DUP BW-03	690-BW-04	690-BW-04	690-BW-04	690-BW-04 Duplicate	
Area of Concern	AOC #6	AOC #6	AOC #6	AOC #6	AOC #6	AOC #6	AOC #6	AOC #6	AOC #6	AOC #6	AOC #1	AOC #1	AOC #1	AOC #1	
Sample Interval**	9.8'-17.3' BGS	9.8'-17.3' BGS	9.8'-17.3' BGS	9.8'-17.3' BGS	7'-17' BGS	7'-17' BGS	7'-17' BGS	9.8'-19.8' BGS	9.8'-19.8' BGS	9.8'-19.8' BGS	5.7'-13.2' BGS	5.7'-13.2' BGS	5.7'-13.2' BGS	5.7'-13.2' BGS	
Sample Collection Date	9/15/2010	11/11/2010	4/19/2012	11/6/2012	9/15/2010	9/15/2010	1/15/2013	9/15/2010	10/30/2012	10/30/2012	9/15/2010	10/30/2012	6/18/2013	6/18/2013	
Volatile Organic Compounds															
Chloromethane	5.0 U	1,300 U	5.0 U	5.0 U	5.0 U	5.0 U	5.0 U	5.0 U	5.0 U	5.0 U	5.0 U	5.0 U	10 U	10 U	5
Vinyl chloride	5.0 U	1,300 U	5.0 U	1.8 J	5.0 U	1.4 J	5.0 U	33	15	10	1,200 D	73	57	50	2
1,1-Dichloroethene	5.0 U	1,300 U	5.0 U	5.0 U	5.0 U	5.0 U	5.0 U	5.0 U	5.0 U	5.0 U	42	2.1 J	2.1 J	2.4 J	5
Acetone	5.0 U	1,300 U	5.0 U	5.0 U	5.0 U	5.0 U	5.0 U	5.0 U	5.0 U	5.0 U	5.0 U	5.0 U	10 U	10 U	50
Carbon disulfide	5.0 U	1,300 U	5.0 U	5.0 U	5.0 U	5.0 U	5.0 U	5.0 U	5.0 U	5.0 U	6.0	5.0 U	10 U	10 U	60*
Methylene chloride	5.0 U	1,300 U	5.0 U	5.0 U	5.0 U	5.0 U	5.0 U	5.0 U	5.0 U	5.0 U	5.0 U	5.0 U	10 U	10 U	5
trans-1,2-dichloroethene	5.0 U	1,300 U	5.0 U	5.0 U	5.0 U	5.0 U	5.0 U	5.0 U	5.0 U	5.0 U	24	1.7 J	10 U	1.8 J	5
Methyl tert-butyl ether	5.0 U	1,300 U	5.0 U	5.0 U	5.0 U	5.0 U	5.0 U	5.0 U	5.0 U	5.0 U	5.0 U	5.0 U	10 U	10 U	10
1,1-Dichloroethane	7.8	1,300 U	1.8 J	1.9 J	6.6	7.1	2.0 J	2.7 J	1.9 J	1.6 J	3.2 J	5.0 U	10 U	10 U	5
2-Butanone	5.0 U	1,300 U	5.0 U	5.0 U	5.0 U	5.0 U	5.0 U	5.0 U	5.0 U	5.0 U	5.0 U	5.0 U	10 U	10 U	50
cis-1,2-dichloroethene	5.0 U	1,300 U	5.0 U	2.8 J	1.2 J	1.3 J	0.63 J	43	7.3	6	4,500 D	190 D	240	230	5
Chloroform	5.0 U	1,300 U	5.0 U	5.0 U	5.0 U	5.0 U	5.0 U	5.0 U	5.0 U	5.0 U	5.0 U	5.0 U	10 U	10 U	7
Chloroethane	12	1,300 U	8.4	5.0 U	8.3	9.7	6.2	5.0 U	3.2 J	5.0 U	5.0 U	5.0 U	10 U	10 U	5
1,2-Dichloroethane	5.0 U	1,300 U	5.0 U	5.0 U	5.0 U	5.0 U	5.0 U	5.0 U	5.0 U	5.0 U	5.0 U	5.0 U	10 U	10 U	0.6
Benzene	1.1 J	1,300 U	5.0 U	5.0 U	4.6 J	5.0 U	1.6 J	2.7 J	1.9 J	1.6 J	3.5 J	0.72 J	10 U	10 U	1
Trichloroethene	5.0 U	1,300 U	5.0 U	3.9 J	5.0 U	5.0 U	5.0 U	3.7 J	3.2 J	2.5 J	2,100 D	100.0	150	160	5
Toluene	5.0 U	1,300 U	5.0 U	5.0 U	5.0 U	5.0 U	5.0 U	5.0 U	5.0 U	5.0 U	1 J	5.0 U	10 U	10 U	5
1,1,2-Trichloroethane	5.0 U	1,300 U	5.0 U	5.0 U	5.0 U	5.0 U	5.0 U	5.0 U	5.0 U	5.0 U	5.0 U	5.0 U	10 U	10 U	1
Tetrachloroethene	5.0 U	1,300 U	5.0 U	5.0 U	5.0 U	5.0 U	5.0 U	5.0 U	5.0 U	5.0 U	5.0 U	5.0 U	10 U	10 U	5
Ethylbenzene	5.0 U	1,300 U	5.0 U	5.0 U	4.1 J	4.4 J	0.97 J	5.0 U	5.0 U	5.0 U	2.1 J	5.0 U	10 U	10 U	5
m,p-Xylene	5.0 U	1,300 U	2.0 J	5.0 U	5.4	5.9	45	5.0 U	5.0 U	5.0 U	1.8 J	5.0 U	10 U	10 U	5
o-Xylene	5.0 U	1,300 U	5.0 U	5.0 U	5.0 U	5.0 U	5.0 U	5.0 U	5.0 U	5.0 U	5.0 U	5.0 U	10 U	10 U	5
Bromoform	NA	1,300 UJ	NA	5.0 U	NA	NA	5.0 U	NA	5.0 U	5.0 U	NA	5.0 U	10 U	10 U	50*
Isopropylbenzene	5.0 U	1,300 U	5.0 U	5.0 U	12	13	3.2 J	5.0 U	5.0 U	5.0 U	5.0 U	5.0 U	10 U	10 U	5
n-Propylbenzene	5.0 U	1,300 U	5.0 U	5.0 U	3.5 J	4.4 J	0.88 J	5.0 U	5.0 U	5.0 U	5.0 U	5.0 U	10 U	10 U	5
1,3,5-Trimethylbenzene	5.0 U	1,300 U	5.0 U	5.0 U	5.0 U	5.0 U	0.68 J	5.0 U	5.0 U	5.0 U	5.0 U	5.0 U	10 U	10 U	5
tert-Butylbenzene	5.0 U	1,300 U	5.0 U	5.0 U	5.0 U	5.0 U	0.54 J	5.0 U	5.0 U	5.0 U	5.0 U	5.0 U	10 U	10 U	5
1,2,4-Trimethylbenzene	5.0 U	1,300 U	5.0 U	5.0 U	5.0 U	1 J	3.5 J	5.0 U	5.0 U	5.0 U	5.0 U	5.0 U	10 U	10 U	5
sec-Butylbenzene	5.0 U	1,300 U	5.0 U	5.0 U	2.2 J	2.5 J	0.74 J	5.0 U	5.0 U	5.0 U	5.0 U	5.0 U	10 U	10 U	5
4-Isopropyltoluene	5.0 U	1,300 U	5.0 U	5.0 U	5.0 U	5.0 U	5.0 U	5.0 U	5.0 U	5.0 U	5.0 U	5.0 U	10 U	10 U	5
n-Butylbenzene	5.0 U	1,300 U	5.0 U	5.0 U	5.0 U	5.0 U	5.0 U	5.0 U	5.0 U	5.0 U	5.0 U	5.0 U	10 U	10 U	5
1,2-Dichlorobenzene	5.0 U	1,300 U	5.0 U	5.0 U	5.0 U	5.0 U	5.0 U	5.0 U	5.0 U	5.0 U	5.0 U	5.0 U	10 U	10 U	3
Naphthalene	5.0 U	1,300 U	5.0 U	5.0 U	5.0 U	5.0 U	1.8 J	5.0 U	5.0 U	5.0 U	5.0 U	5.0 U	10 U	10 U	10
Total VOCs	20.9	ND	12.2	10	47.9	50.7	67.7	85.1	32.5	21.7	7,883.6	177.5 0.0	449.1	444.2	*Not Available*
Total VOC TICs	None Detected	26,700	None Detected	17.6 J	72 N,J	92.4 N,J	42.2	4.8 N,J	None Detected	None Detected	None Detected	None Detected	None Detected	None Detected	
Total VOCs & VOC TICs	20.9	26,700	12.2	28	119.9	143.1	109.9	89.9	32.5	21.7	7,883.6	177.5 0.0	449.1	444.2	

Notes:
VOC analysis by United States Environmental Protection Agency (USEPA) Method SW846 8260B.
J – Indicates that the constituent was positively identified; but the associated numerical value is the approximate concentration of the constituent in the sample.
D - Indicates that the value was obtained from a secondary dilution anaylsis.
U - Indicates that the constituent was not detected.
E - Indicates the compound concentration exceeded the calibration range.
NA = Not Applicable or Not Available
**Refers to screened interval or length of open rock, depending on well construction.
***This is a sample of product and is not representative of VOC concentrations in dissolved groundwater. Recovery wells RW-West and RW-East were previously designated REC-N and REC-S.
Highlighted type indicates that the constituent was detected at a concentration above the NYSDEC Part 703 Groundwater Standards or TOGS 1.1.1.
Indicates sample is a DUPLICATE of the sample preceding this sample.
* Indicates value is from Division of Water Techinical and Operational Guidance Series (TOGS 1.1.1)

Table 2.5.2A
690 Saint Paul Street
NYSDEC Brownfield Cleanup Program - Soil Management Plan
NYSDEC BCP ID No. C828159

Summary of Detected Volatile Organic Compounds in Dedicated Monitoring Well Groundwater Samples
Results in Micrograms per Liter (µg/L) or Parts Per Billion (PPB)

Sample ID	Groundwater Samples																NYSDEC Part 703 Groundwater Standards and TOGS 1.1.1 Guidance Values
	690-BW-05	***690-BW-05-Oil	BW-05 PDB 8.7'-10.7'	BW-05 PDB DUP 8.7'-10.7'	BW-05 PDB 15'-17'	690-BW-05	690-BW-05	690-BW-06	690-BW-06	690-BW-06	690-BW-07	690-BW-07-DUP	690-BW-07	690-BW-07	690-BW-08	690-BW-08	
Area of Concern	AOC #1	AOC #1	AOC #1	AOC #1	AOC #1	AOC #1	AOC #1	AOC #1	AOC #1	AOC #1	AOC #1	AOC #1	AOC #1	AOC #1	AOC #8	AOC #8	
Sample Interval**	8.7'-18.7' BGS	8.7'-18.7' BGS	8.7'-10.7' BGS	8.7'-10.7' BGS	15'-17' BGS	8.7'-18.7' BGS	8.7'-18.7' BGS	4.5'-14.5' BGS	4.5'-14.5' BGS	4.5'-14.5' BGS	11'-21' BGS	11'-21' BGS	11'-21' BGS	11'-21' BGS	14.5'-24.5' BGS	14.5'-24.5' BGS	
Sample Collection Date	11/11/2010	11/11/2010	2/22/12 - 3/8/12	2/22/12 - 3/8/12	2/22/12 - 3/8/12	11/1/2012	6/18/2013	11/10/2010	10/30/2012	6/19/2013	11/10/2010	11/10/2010	11/5/2012	6/19/2013	11/11/2010	11/5/2012	
Volatile Organic Compounds																	
Chloromethane	5.0 U	57,000 U	5.0 U	5.0 U	5.0 U	5.0 U	100 U	5.0 U	5.0 U	100 U	5.0 U	5.0 U	5.0 U	5.0 U	5.0 U	5.0 U	5
Vinyl chloride	2,700 D	57,000 U	640 DJ	630 DJ	390 DJ	940 D	810	1,100 D	810 DJ	380	63	110 J	160	3.9 J	5.0 UJ	5.0 U	2
1,1-Dichloroethene	66	57,000 U	13	15	15	40	39 J	33	50.0	48 J	5.7	6.7	19	0.76 J	5.0 U	5.0 U	5
Acetone	5.0 U	57,000 U	5.0 U	5.0 U	5.0 U	5.0 U	100 U	5.0 U	5.0 U	100 U	5.0 U	5.0 U	5.0 U	5.0 U	5.0 U	5.0 U	50
Carbon disulfide	5.0 U	57,000 U	5.0 U	5.0 U	5.0 U	1.0 J	100 U	5.0 U	5.0 U	100 U	5.0 U	5.0 U	1.2 J	5.0 U	5.0 U	5.0 U	60*
Methylene chloride	5.0 U	57,000 U	5.0 U	5.0 U	5.0 U	5.0 U	100 U	5.0 U	5.0 U	100 U	5.0 U	5.0 U	5.0 U	5.0 U	5.0 U	5.0 U	5
trans-1,2-dichloroethene	65	57,000 U	46	29	41	51	41 J	27	31.0	24 J	4.9 J	10	26	5.0 U	5.0 U	5.0 U	5
Methyl tert-butyl ether	5.0 U	57,000 U	5.0 U	5.0 U	5.0 U	5.0 U	100 U	5.0 U	5.0 U	100 U	5.0 U	5.0 U	5.0 U	5.0 U	5.0 U	5.0 U	10
1,1-Dichloroethane	5.3	57,000 U	1.6 J	1.9 J	1.8 J	2.4 J	100 U	1.2 J	5.0 U	100 U	1.2 J	1.6 J	4.5 J	5.0 U	5.0 U	5.0 U	5
2-Butanone	5.0 U	57,000 U	5.0 U	5.0 U	5.0 U	5.0 U	100 U	5.0 U	5.0 U	100 U	5.0 U	5.0 U	5.0 U	5.0 U	5.0 U	5.0 U	50
cis-1,2-dichloroethene	5,400 D	57,000 U	2,000 DJ	2,000 DJ	1,800 DJ	3,300 D	4,800 D	3,300 D	3,300 D	3,100	590 D	600 D	1,600 D	67	14	85	5
Chloroform	5.0 U	57,000 U	5.0 U	5.0 U	5.0 U	5.0 U	100 U	5.0 U	5.0 U	100 U	5.0 U	5.0 U	5.0 U	5.0 U	5.0 U	5.0 U	7
Chloroethane	4.4 J	57,000 U	5.0 U	5.0 U	5.0 U	5.0 U	100 U	5.0 U	5.0 U	100 U	5.0 U	5.0 U	5.0 U	5.0 U	5.0 U	5.0 U	5
1,2-Dichloroethane	5.0 U	57,000 U	5.0 U	5.0 U	5.0 U	5.0 U	100 U	5.0 U	0.8 J	100 U	5.0 U	5.0 U	5.0 U	5.0 U	5.0 U	5.0 U	0.6
Benzene	3.3 J	57,000 U	1.4 J	1.5 J	1.5 J	1.8 J	100 U	5.0 U	1.1 J	100 U	5.0 U	5.0 U	1.6 J	5.0 U	5.0 U	5.0 U	1
Trichloroethene	4,300 D	2,400,000	370 DJ	350 DJ	260 DJ	880 D	3,000	4,700 D	5,300 D	6,200 D	740 D	860 D	2,100 D	86	34	17	5
Toluene	2.5 J	57,000 U	1.3 J	1.6 J	1.5 J	5.0 U	100 U	5.0 U	0.59 J	100 U	5.0 U	5.0 U	5.0 U	5.0 U	5.0 U	5.0 U	5
1,1,2-Trichloroethane	5.0 U	57,000 U	5.0 U	5.0 U	5.0 U	5.0 U	100 U	5.0 U	5.0 U	100 U	5.0 U	5.0 U	5.0 U	5.0 U	5.0 U	5.0 U	1
Tetrachloroethene	5.0 U	57,000 U	5.0 U	5.0 U	5.0 U	5.0 U	100 U	3.6 J	6.8	100 U	5.0 U	5.0 U	5.0 U	2.0 J	5.0 U	5.0 UJ	5
Ethylbenzene	3.1 J	57,000 U	2.5 J	2.8 J	3.0 J	2.4 J	100 U	1.4 J	2.7 J	100 U	5.0 U	5.0 U	5.0 U	5.0 U	5.0 U	5.0 U	5
m,p-Xylene	10	57,000 U	5.2	4.9 J	4.8 J	2.7 J	100 U	5.0 U	0.8 J	100 U	5.0 U	5.0 U	5.0 U	5.0 U	5.0 U	5.0 U	5
o-Xylene	3.5	57,000 U	3.2 J	3.1 J	3.1 J	2.6 J	100 U	5.0 U	5.0 U	100 U	5.0 U	5.0 U	5.0 U	5.0 U	5.0 U	5.0 U	5
Bromoform	NA	57,000 U	5.0 UJ	5.0 UJ	5.0 UJ	5.0 U	100 U	NA	5.0 U	100 U	NA	NA	5.0 U	5.0 U	NA	5.0 UJ	50*
Isopropylbenzene	1.6 J	57,000 U	1.4 J	1.5 J	1.4 J	1.0 J	100 U	5.0 U	5.0 U	100 U	5.0 U	5.0 U	5.0 U	5.0 U	5.0 U	5.0 U	5
n-Propylbenzene	1.3 J	57,000 U	5.0 U	5.0 U	5.0 U	5.0 U	100 U	5.0 U	5.0 U	100 U	5.0 U	5.0 U	5.0 U	5.0 U	5.0 U	5.0 U	5
1,3,5-Trimethylbenzene	5.0 U	57,000 U	5.0 U	5.0 U	5.0 U	5.0 U	100 U	5.0 U	5.0 U	100 U	5.0 U	5.0 U	5.0 U	5.0 U	5.0 U	5.0 U	5
tert-Butylbenzene	5.0 U	57,000 U	5.0 U	5.0 U	5.0 U	5.0 U	100 U	5.0 U	5.0 U	100 U	5.0 U	5.0 U	5.0 U	5.0 U	5.0 UJ	5.0 U	5
1,2,4-Trimethylbenzene	1.9 J	57,000 U	5.0 U	5.0 U	5.0 U	5.0 U	100 U	5.0 U	5.0 U	100 U	5.0 U	5.0 U	5.0 U	5.0 U	5.0 U	5.0 U	5
sec-Butylbenzene	5.0 U	57,000 U	5.0 U	5.0 U	5.0 U	5.0 U	100 U	5.0 U	5.0 U	100 U	5.0 U	5.0 U	5.0 U	5.0 U	5.0 U	5.0 U	5
4-Isopropyltoluene	5.0 U	57,000 U	5.0 U	5.0 U	5.0 U	5.0 U	100 U	5.0 U	5.0 U	100 U	5.0 U	5.0 U	5.0 U	5.0 U	5.0 U	5.0 U	5
n-Butylbenzene	5.0 U	57,000 U	5.0 U	5.0 U	5.0 U	5.0 U	100 U	5.0 U	5.0 U	100 U	5.0 U	5.0 U	5.0 U	5.0 U	5.0 U	5.0 U	5
1,2-Dichlorobenzene	5.0 U	57,000 U	5.0 U	5.0 U	5.0 U	5.0 U	100 U	5.0 U	5.0 U	100 U	5.0 U	5.0 U	5.0 U	5.0 U	5.0 U	5.0 U	3
Naphthalene	5.0 U	57,000 U	5.0 UJ	5.0 UJ	5.0 UJ	5.0 U	100 U	5.0 U	5.0 U	100 U	5.0 U	5.0 U	5.0 U	5.0 U	5.0 U	5.0 U	10
Total VOCs	12,567.9	2,400,000	3,085.6	3,041	2,523.1	5,229.9	8,690.0	9,166.2	9,503.8	9,752.0	1,404.8	1,588.3	3,912.3	159.7	48	102	
Total VOC TICs	5.4 J	3,260,000	NA	NA	NA	13	None Detected	13 N,J	None Detected	None Detected	None Detected	None Detected	11 J	None Detected	None Detected	8.8	*Not Available*
Total VOCs & VOC TICs	11,825.3	5,660,000	NA	NA	NA	5,242.9	8,690.0	9,179.2	9,503.8	9,752.0	1,404.8	1,588.3	3,923.3	159.7	48	111	

Notes:
VOC analysis by United States Environmental Protection Agency (USEPA) Method SW846 8260B.
J – Indicates that the constituent was positively identified; but the associated numerical value is the approximate concentration of the constituent in the sample.
D - Indicates that the value was obtained from a secondary dilution anaylsis.
U - Indicates that the constituent was not detected.
E - Indicates the compound concentration exceeded the calibration range.
NA = Not Applicable or Not Available
**Refers to screened interval or length of open rock, depending on well construction.
***This is a sample of product and is not representative of VOC concentrations in dissolved groundwater. Recovery wells RW-West and RW-East were previously designated REC-N and REC-S.
Highlighted type indicates that the constituent was detected at a concentration above the NYSDEC Part 703 Groundwater Standards and TOGS 1.1.1.
Indicates sample is a DUPLICATE of the sample preceding this sample.
* Indicates value is from Division of Water Techinical and Operational Guidance Series (TOGS 1.1.1)

Table 2.5.2A
690 Saint Paul Street
NYSDEC Brownfield Cleanup Program - Soil Management Plan
NYSDEC BCP ID No. C828159

Summary of Detected Volatile Organic Compounds in Dedicated Monitoring Well Groundwater Samples
Results in Micrograms per Liter (µg/L) or Parts Per Billion (PPB)

Sample ID	Groundwater Samples															NYSDEC Part 703 Groundwater Standards and TOGS 1.1.1 Guidance Values
	BW-09	BW-09 DUP	690-BW-09	BW-10	BW-10DUP	690-BW-10	BW-11	690-BW-11	BW-12	690-BW-12	690-BW-12	BW-13** 26.8'-31.8'	BW-13** 27'-32' RE	BW-13** 31.8'-36.8'	690-BW-13	
Area of Concern	AOC #1	AOC #1	AOC #1	AOC #1	AOC #1	AOC #1	AOC #1	AOC #1	AOC #1	AOC #1	AOC #1	AOC #1	AOC #1	AOC #1	AOC #1	
Sample Interval***	2'-12' BGS	2'-12' BGS	2'-12' BGS	3.5'-11.5' BGS	3.5'-11.5' BGS	3.5'-11.5' BGS	2.5'-7.5' BGS	2.5'-7.5' BGS	2'-8.5' BGS	2'-8.5' BGS	2'-8.5' BGS	26.8'-31.8' BGS	27'-32' BGS	31.8'-36.8' BGS	27'-37' BGS	
Sample Collection Date	2/22/12	2/22/12	11/2/2012	4/19/2012	4/19/12	10/30/2012	2/22/12	10/30/2012	2/22/2012	10/30/2012	6/19/2013	5/15/2012	5/16/2012	5/16/2012	11/1/2012	
Volatile Organic Compounds																
Chloromethane	5.0 U	5.0 U	5.0 U	5.0 U	5.0 U	5.0 U	5.0 U	5.0 U	5.0 U	5.0 U	5.0 U	2.00 U	2.00 U	2.00 U	5.0 U	5
Vinyl chloride	5.0 U	5.0 U	5.0 U	5.0 U	5.0 U	5.0 U	74	5.0 U	49	1.9 J	2.9 J	2.00 U	2.00 U	2.00 U	5.0 U	2
1,1-Dichloroethene	5.0 U	5.0 U	5.0 U	5.0 U	5.0 U	5.0 U	3.8 J	5.0 U	5.0 U	5.0 U	5.0 U	2.00 U	2.00 U	2.00 U	5.0 U	5
Acetone	5.0 U	5.0 U	5.0 U	6.1	5.8	5.0 U	5.0 U	5.0 U	4.2 J	5.0 U	5.0 U	10.0 U	10.0 U	25.7	11	50
Carbon disulfide	5.0 U	5.0 U	5.0 U	5.0 U	5.0 U	5.0 U	5.0 U	5.0 U	5.0 U	5.0 U	5.0 U	2.00 U	2.00 U	2.00 U	8	60*
Methylene chloride	5.0 U	5.0 U	5.0 U	5.0 U	5.0 U	5.0 U	5.0 U	5.0 U	5.0 U	5.0 U	5.0 U	5.00 U	5.00 U	5.00 U	5.0 U	5
trans-1,2-dichloroethene	5.0 U	5.0 U	5.0 U	5.0 U	5.0 U	5.0 U	2.9 J	5.0 U	1.9 J	5.0 U	5.0 U	2.00 U	2.00 U	2.00 U	5.0 U	5
Methyl tert-butyl ether	5.0 U	5.0 U	5.0 U	5.0 U	5.0 U	5.0 U	5.0 U	5.0 U	5.0 U	5.0 U	5.0 U	2.00 U	2.00 U	2.00 U	5.0 U	10
1,1-Dichloroethane	5.0 U	5.0 U	5.0 U	5.0 U	5.0 U	5.0 U	5.0 U	5.0 U	5.0 U	5.0 U	5.0 U	2.00 U	2.00 U	2.00 U	5.0 U	5
2-Butanone	5.0 U	5.0 U	5.0 U	5.0 U	5.0 U	5.0 U	5.0 U	5.0 U	5.0 U	5.0 U	5.0 U	10.0 U	10.0 U	10.0 U	5.0 U	50
cis-1,2-dichloroethene	2.7 J	1.8 J	5.0 U	1.2 J	1.4 J	1.4 J	460 D	35	31	1.5 J	5.2 U	2.00 U	2.00 U	2.00 U	5.0 U	5
Chloroform	5.0 U	5.0 U	5.0 U	5.0 U	5.0 U	5.0 U	1.5 J	0.61 J	5.0 U	5.0 U	5.0 U	6.56	5.73	18.3	4.4 J	7
Chloroethane	5.0 U	5.0 U	5.0 U	5.0 U	5.0 U	5.0 U	5.0 U	5.0 U	5.0 U	5.0 U	5.0 U	2.00 U	2.00 U	2.00 U	5.0 U	5
1,2-Dichloroethane	5.0 U	5.0 U	5.0 U	5.0 U	5.0 U	5.0 U	5.0 U	5.0 U	5.0 U	5.0 U	5.0 U	2.00 U	2.00 U	2.00 U	5.0 U	0.6
Benzene	1.3 J	1.3 J	5.0 U	1.4 J	1.5 J	1.9 J	5.0 U	5.0 U	0.64 J	5.0 U	5.0 U	1.04	0.765	1.21	5.0 U	1
Trichloroethene	5.0 U	3.8 J	3.9 J	3.1 J	2.9 J	9.8	430 D	56	7.4	1.1 J	1.6 U	2.66	1.43 J	2.87	3.3 J	5
Toluene	5.0 U	5.0 U	5.0 U	5.0 U	5.0 U	5.0 U	5.0 U	5.0 U	1.0 J	5.0 U	5.0 U	14.4	77.20	5.38	5.0 U	5
1,1,2-Trichloroethane	5.0 U	5.0 U	5.0 U	5.0 U	5.0 U	5.0 U	5.0 U	5.0 U	5.0 U	5.0 U	5.0 U	2.00 U	2.00 U	2.00 U	5.0 U	1
Tetrachloroethene	5.0 U	5.0 U	5.0 UJ	5.0 U	5.0 U	5.0 U	5.0 U	5.0 U	5.0 U	5.0 U	5.0 U	2.00 U	2.00 U	2.00 U	5.0 U	5
Ethylbenzene	5.0 U	5.0 U	5.0 U	1.1 J	1.1 J	5.0 U	5.0 U	5.0 U	1.3 J	5.0 U	5.0 U	2.00 U	2.00 U	2.78	1.4 J	5
m,p-Xylene	5.0 U	5.0 U	5.0 U	1.8 J	2.2 J	5.0 U	5.0 U	5.0 U	1.7 J	5.0 U	5.0 U	7.26	7.0	12.5	3.8 J	5
o-Xylene	5.0 U	5.0 U	5.0 U	5.0 U	5.0 U	5.0 U	5.0 U	5.0 U	1.1 J	5.0 U	5.0 U	2.00 U	2.00 U	2.78	1.2 J	5
Bromoform	5.0 U	5.0 U	5.0 UJ	NA	NA	5.0 U	5.0 U	5.0 U	5.0 U	5.0 U	5.0 U	5.00 U	5.00 U	5.00 U	5.0 U	50*
Isopropylbenzene	5.0 U	5.0 U	5.0 U	1.8 J	1.9 J	5.5	5.0 U	5.0 U	5.0 U	5.0 U	5.0 U	NA	NA	NA	5.0 U	5
n-Propylbenzene	5.0 U	5.0 U	5.0 U	2.2 J	2.3 J	5.0	5.0 U	5.0 U	5.0 U	5.0 U	5.0 U	NA	NA	NA	5.0 U	5
1,3,5-Trimethylbenzene	5.0 U	5.0 U	5.0 U	2.4 J	2.4 J	5.0 U	5.0 U	5.0 U	5.0 U	5.0 U	5.0 U	NA	NA	NA	5.0 U	5
tert-Butylbenzene	5.0 U	5.0 U	5.0 U	1.2 J	1.4 J	1.7 J	5.0 U	5.0 U	5.0 U	5.0 U	5.0 U	NA	NA	NA	5.0 U	5
1,2,4-Trimethylbenzene	1.1 J	1.2 J	5.0 U	16.0	16.0	4.4 J	5.0 U	5.0 U	5.0 U	5.0 U	5.0 U	NA	NA	NA	1.1 J	5
sec-Butylbenzene	5.0 U	5.0 U	5.0 U	1.9 J	1.9 J	5.0 U	5.0 U	5.0 U	5.0 U	5.0 U	5.0 U	NA	NA	NA	5.0 U	5
4-Isopropyltoluene	5.0 U	5.0 U	5.0 U	5.0 U	5.0 U	5.0 U	5.0 U	5.0 U	5.0 U	5.0 U	5.0 U	NA	NA	NA	5.0 U	5
n-Butylbenzene	5.0 U	5.0 U	5.0 U	5.0 U	5.0 U	5.0 U	5.0 U	5.0 U	5.0 U	5.0 U	5.0 U	NA	NA	NA	5.0 U	5
1,2-Dichlorobenzene	5.0 U	5.0 U	5.0 U	5.0 U	5.0 U	5.0 U	5.0 U	5.0 U	5.0 U	5.0 U	5.0 U	2.00 U	2.00 U	2.00 U	5.0 U	3
Naphthalene	5.0 U	5.0 U	5.0 U	7.4	7.4	1.7 J	5.0 U	5.0 U	5.0 U	5.0 U	5.0 U	NA	NA	NA	5.0 U	10
Total VOCs	5.1	8.1	3.9	47.6	48.2	31	542.2	92	99.2	4.5	2.9	31.9	92.1	77.2	34.2	*Not Available*
Total VOC TICs	NA	NA	8.6 J	443.0	446.0	345	NA	None Detected	33 J	None Detected	None Detected	NA	NA	NA	291.3	
Total VOCs & VOC TICs	NA	NA	12.5	490.6	494.2	376	NA	92	132.2	4.5	2.9	31.9	92.1	77.2	325.5	

Notes:
VOC analysis by United States Environmental Protection Agency (USEPA) Method SW846 8260B.
J – Indicates that the constituent was positively identified; but the associated numerical value is the approximate concentration of the constituent in the sample.
D - Indicates that the value was obtained from a secondary dilution anaylsis.
U - Indicates that the constituent was not detected.
E - Indicates the compound concentration exceeded the calibration range.
NA = Not Applicable or Not Available
***Refers to screened interval or length of open rock, depending on well construction.
**Indicates grab samples collected for screening purposes prior to developing well.
Highlighted type indicates that the constituent was detected at a concentration above the NYSDEC Part 703 Groundwater Standards and TOGS 1.1.1.
Indicates sample is a DUPLICATE of the sample preceding this sample.
* Indicates value is from Division of Water Techinical and Operational Guidance Series (TOGS 1.1.1)

Table 2.5.2B
690 Saint Paul Street
NYSDEC Brownfield Cleanup Program - Soil Management Plan
NYSDEC BCP ID No. C828159

Summary of Detected Semi-Volatile Organic Compounds in Dedicated Monitoring Well Groundwater Samples
Results in Micrograms per Liter (µg/L) or Parts Per Billion (PPB)

Sample ID	Groundwater Samples																			NYSDEC Part 703 Groundwater Standards
	690-BW-01	***BW-01 (Oil)	690-BW-02	690-BW-2 (DUPLICATE)	690-BW-02	690-BW-03	690-BW-04	690-FIELD BLANK	690-BW-05	***690-BW-5-Oil	690-BW-06	690-BW-07	690-BW-07-DUP-1	690-BW-08	BW-09	BW-11	BW-12	BW-10	***RECN+S (Oil)	
Area of Concern	AOC #6	AOC #6	AOC #6	AOC #6	AOC #6	AOC #6	AOC #1	NA	AOC #1	AOC #1	AOC #1	AOC #1	AOC #1	AOC #8	AOC #1	AOC #1	AOC #1	AOC #1	AOC #6	
Sample Interval*	9.8'-17.3' BGS	9.8'-17.3' BGS	7'-17' BGS	7'-17' BGS	7'-17' BGS	9.8'-19.8' BGS	5.7'-13.2' BGS	NA	8.7'-18.7' BGS	8.7'-18.7' BGS	4.5'-14.5' BGS	11'-21' BGS	11'-21' BGS	14.5'-24.5' BGS	2'-12' BGS	2.5'-7.5' BGS	2'-8.5' BGS	3.5'-11.5' BGS	~7'-9' BGS	
Sample Collection Date	9/15/2010	11/11/2010	9/15/2010	9/15/2010	1/15/2013	9/15/2010	9/15/2010	9/15/2010	11/11/2010	11/11/2010	11/11/2010	11/10/2010	11/10/2010	11/10/2010	2/22/2012	2/22/2012	2/22/2012	4/19/2012	11/11/2010	
Semi-Volatile Organic Compounds																				
Naphthalene	10 U	99,000 U	10 U	10 U	10 UJ	10 U	10 U	10 U	10 U	99,000 U	10 U	10 U	10 U	10 U	10 UJ	10 UJ	10 UJ	10 U	99,000 U	10
2,2'-oxybis(1-Chloropropane)	NA	99,000 U	NA	NA	NA	NA	NA	NA	10 U	99,000 U	10 U	10 U	10 U	10 U	10 UJ	10 UJ	10 UJ	NA	99,000 U	NA
2,4-Dimethylphenol	NA	99,000 UJ	NA	NA	10 UJ	NA	NA	NA	10 UJ	99,000 UJ	10 UJ	10 UJ	10 UJ	10 UJ	10 UJ	10 UJ	10 UJ	NA	99,000 UJ	2
2-Methylnaphthalene	10 U	99,000 U	10 U	10 U	10 UJ	10 U	10 U	10 U	10 U	99,000 U	10 U	10 U	10 U	10 U	10 UJ	10 UJ	10 UJ	NA	14,000 J	NA
Acenaphthylene	10 U	99,000 U	10 U	10 U	10 UJ	10 U	10 U	10 U	10 U	99,000 U	10 U	10 U	10 U	10 U	10 UJ	10 UJ	10 UJ	NA	99,000 U	NA
Acenaphthene	10 U	99,000 U	10 U	10 U	10 UJ	10 U	10 U	10 U	10 U	99,000 U	10 U	10 U	10 U	10 U	10 UJ	10 UJ	10 UJ	10 U	99,000 U	20
Dibenzofuran	10 U	99,000 U	10 U	10 U	10 UJ	10 U	10 U	10 U	10 U	99,000 U	10 U	10 U	10 U	10 U	10 UJ	10 UJ	10 UJ	NA	99,000 U	NA
4-Chlorophenyl-phenylether	NA	99,000 U	NA	NA	10 UJ	NA	NA	NA	10 U	99,000 U	10 U	10 U	10 U	10 U	10 UJ	10 UJ	10 UJ	NA	99,000 U	NA
Fluorene	10 U	99,000 U	10 U	10 U	10 UJ	10 U	10 U	10 U	10 U	99,000 U	10 U	10 U	10 U	10 U	10 UJ	10 UJ	10 UJ	10 U	99,000 U	50
Phenanthrene	10 U	99,000 U	1.1 J	1.1 J	10 UJ	10 U	10 U	10 U	10 U	38,000 J	10 U	10 U	10 U	10 U	10 UJ	10 UJ	10 UJ	10 U	15,000 J	50
Anthracene	10 U	99,000 U	10 U	10 U	10 UJ	10 U	10 U	10 U	10 U	99,000 U	10 U	10 U	10 U	10 U	10 UJ	10 UJ	10 UJ	10 U	99,000 U	50
Carbazole	10 U	99,000 U	10 U	10 U	10 UJ	10 U	10 U	10 U	10 U	99,000 U	10 U	10 U	10 U	10 U	10 UJ	10 UJ	10 UJ	NA	99,000 U	NA
Di-n-butylphthalate	NA	99,000 U	NA	NA	10 UJ	NA	NA	NA	10 U	99,000 U	10 U	10 U	10 U	10 U	10 UJ	10 UJ	10 UJ	NA	99,000 U	50
Fluoranthene	10 U	99,000 U	10 U	10 U	10 UJ	10 U	10 U	10 U	10 U	99,000 U	10 U	10 U	10 U	10 U	10 UJ	10 UJ	10 UJ	10 U	99,000 U	50
Pyrene	10 U	99,000 U	10 UJ	10 U	10 UJ	10 U	10 U	10 U	10 U	99,000 U	10 U	10 U	10 U	10 U	10 UJ	10 UJ	10 UJ	10 U	19,000 J	50
Benzo(a)anthracene	10 U	99,000 U	10 UJ	10 U	10 UJ	10 U	10 U	10 U	10 U	99,000 U	10 U	10 U	10 U	10 U	10 UJ	10 UJ	10 UJ	10 U	99,000 U	0.002
Chrysene	10 U	99,000 U	10 UJ	10 U	10 UJ	10 U	10 U	10 U	10 U	99,000 U	10 U	10 U	10 U	10 U	10 UJ	10 UJ	10 UJ	10 U	24,000 J	0.002
Bis(2-ethylhexyl)phthalate	10 U	99,000 U	2.7 J	2.8 J	10 UJ	10 U	10 U	10 U	10 U	120,000 J	10 U	21	10 U	5.3 J	10 UJ	10 UJ	10 UJ	NA	150,000	5
Benzo(b)fluoranthene	10 U	99,000 U	10 UJ	10 U	10 UJ	10 U	10 U	10 U	10 U	99,000 U	10 U	10 U	10 U	10 U	10 UJ	10 UJ	10 UJ	10 U	99,000 U	0.002
Benzo(k)fluoranthene	10 U	99,000 U	10 UJ	10 U	10 UJ	10 U	10 U	10 U	10 U	99,000 U	10 U	10 U	10 U	10 U	10 UJ	10 UJ	10 UJ	10 U	99,000 U	0.002
Benzo(a)pyrene	10 U	99,000 U	10 UJ	10 U	10 UJ	10 U	10 U	10 U	10 U	99,000 U	10 U	10 U	10 U	10 U	10 UJ	10 UJ	10 UJ	10 U	99,000 U	ND
Indeno(1,2,3-cd)pyrene	10 U	99,000 U	10 UJ	10 U	10 UJ	10 U	10 U	10 U	10 U	99,000 U	10 U	10 U	10 U	10 U	10 UJ	10 UJ	10 UJ	10 U	99,000 U	0.002
Dibenzo(a,h)anthracene	10 U	99,000 U	10 UJ	10 U	10 UJ	10 U	10 U	10 U	10 U	99,000 U	10 U	10 U	10 U	10 U	10 UJ	10 UJ	10 UJ	10 U	99,000 U	NA
Benzo(g,h,i)perylene	10 U	99,000 U	10 UJ	10 U	10 UJ	10 U	10 U	10 U	10 U	99,000 U	10 U	10 U	10 U	10 U	10 UJ	10 UJ	10 UJ	10 U	99,000 U	NA
Total SVOCs	None Detected	None Detected	3.8	3.9	None Detected	None Detected	None Detected	None Detected	None Detected	158,000	None Detected	21	None Detected	5.3	None Detected	None Detected	None Detected	None Detected	222,000	
Total SVOC TICs	473.1 N,J	None Detected	432.8 N,J	631.5 N,J	152.5 J	18.5 N,J	40.2 N,J	None Detected	80.5 N,J	12,180,000	None Detected	None Detected	None Detected	None Detected	26.3 NJ	10.4 NJ	40 NJ	None Detected	6,910,000	*Not Available*
Total SVOCs & SVOC TICs	473.1	None Detected	436.6	635.4	152.5	18.5	40.2	None Detected	80.5	12,338,000	None Detected	21	None Detected	5.3	26.3	10.4	40	None Detected	7,132,000	

Notes:
SVOC analysis by United States Environmental Protection Agency (USEPA) Method SW846 8270.
J – Indicates that the constituent was positively identified; but the associated numerical value is the approximate concentration of the constituent in the sample.
U - Indicates that the constituent was not detected above the indicated method detection limit (MDL).
N - indicates presumptive evidence of a compound. This flag is used only for TICs, where the identification is based on the Mass Spectral library search. It is applied to all TIC results.
Highlighted type indicates that the constituent was detected at a concentration above the NYSDEC Part 703 Groundwater Standards.
Indicates sample is a DUPLICATE of the sample preceding this sample.
NA = Not Applicable or Not Available
*Refers to screened interval or length of open rock, depending on well construction.
***This is a sample of product and is not representative of SVOC concentrations in dissolved groundwater. Recovery wells RW-West and RW-East were previously designated REC-N and REC-S.

Sample ID	Groundwater Samples																		NYSDEC Part 703 Groundwater Standards
	REC-B-EAST	REC-B-WEST	BW-01	REC-B-EAST	690-BW-10	690-FIELD BLANK	690-MW-07	690-MW-06	690-REC-B-W	690-MW-10	690-MW-11	690-MW-09	690-FIELD BLANK	690-BW-07	690-BW-08	690-BW-01	MW-05	FIELD BLANK	
Area of Concern	AOC #6	AOC #6	AOC #6	AOC #6	AOC #1	NA	AOC #8	AOC #8	AOC #6	AOC #2	AOC #6C	AOC #2	NA	AOC #1	AOC #8	AOC #6	AOC #2	NA	
Sample Interval*	1.5'-8.0' BGS	1.5'-8.5' BGS	9.8'-17.3' BGS	1.5'-8.0' BGS	3.5'-11.5' BGS	NA	1.9'-11.9' BGS	5.3'-10.3' BGS	1.5'-8.5' BGS	6.30'-11.30' BGS	4.12'-9.12' BGS	6.25'-11.25' BGS	NA	11'-21' BGS	14.5'-24.5' BGS	9.8'-17.3' BGS	6.7'-11.7' BGS	NA	
Sample Collection Date	4/19/2012	4/19/2012	4/19/2012	10/30/2012	10/30/2012	10/30/2012	11/2/2012	11/2/2012	11/2/2012	11/1/2012	11/1/2012	11/1/2012	11/2/2012	11/5/2012	11/5/2012	11/6/2012	1/18/2013	11/5/2012	
Semi-Volatile Organic Compounds																			
Naphthalene	10 U	10 U	10 U	10 U	10 UJ	10 U	10 U	10 U	10 UJ	10 U	10 UJ	10 U	10 U	10 U	10 U	10 UJ	10 U	10 U	10
2,2'-oxybis(1-Chloropropane)	NA	NA	NA	NA	NA	NA	NA	NA	NA	NA	NA	NA	NA	NA	4.90 J	10 UJ	10 U	NA	NA
2,4-Dimethylphenol	NA	NA	NA	10 UJ	10 UJ	10 UJ	10 UJ	10 UJ	10 UJ	10 UJ	10 UJ	10 UJ	10 UJ	10 UJ	10 UJ	10 UJ	10 UJ	10 U	2
2-Methylnaphthalene	NA	NA	NA	10 U	10 UJ	10 U	10 U	10 U	10 UJ	10 U	10 UJ	10 U	10 U	10 U	10 U	10 UJ	10 U	10 U	NA
Acenaphthylene	NA	NA	NA	10 U	10 UJ	10 U	10 U	10 U	10 UJ	10 U	10 UJ	10 U	10 U	10 U	10 U	10 UJ	10 U	10 U	NA
Acenaphthene	10 U	10 U	10 U	10 U	10 UJ	10 U	10 U	10 U	10 UJ	10 U	10 UJ	10 U	10 U	10 U	10 U	10 UJ	10 U	10 U	20
Dibenzofuran	NA	NA	NA	10 U	10 UJ	10 U	10 U	10 U	10 UJ	10 U	10 UJ	10 U	10 U	10 U	10 U	10 UJ	10 U	10 U	NA
4-Chlorophenyl-phenylether	NA	NA	NA	10 UJ	10 UJ	10 UJ	10 UJ	10 UJ	10 UJ	10 UJ	10 UJ	10 UJ	10 UJ	10 UJ	10 UJ	10 UJ	10 U	10 U	NA
Fluorene	10 U	10 U	10 U	10 UJ	10 UJ	10 U	10 U	10 U	10 UJ	10 U	10 UJ	10 U	10 U	10 U	10 U	10 UJ	10 U	10 U	50
Phenanthrene	10 U	10 U	10 U	10 U	10 UJ	10 U	10 U	10 U	10 UJ	10 U	10 UJ	10 U	10 U	10 U	10 U	10 UJ	10 U	10 U	50
Anthracene	10 U	10 U	10 U	10 U	10 UJ	10 U	10 U	10 U	10 UJ	10 U	10 UJ	10 U	10 U	10 U	10 U	10 UJ	10 U	10 U	50
Carbazole	NA	NA	NA	10 U	10 UJ	10 U	10 U	10 U	10 UJ	10 U	10 UJ	10 U	10 U	10 U	10 U	10 UJ	10 U	10 U	NA
Di-n-butylphthalate	NA	NA	NA	12 U	11 U	11	11 U	8 U	11 U	10 U	11 U	6.8 U	7.2 J	11 U	9.2 U	12 U	2.0 J	9 J	50
Fluoranthene	10 U	10 U	10 U	10 U	10 UJ	10 U	10 U	10 U	10 UJ	10 U	10 UJ	10 U	10 U	10 U	10 U	10 UJ	10 U	10 U	50
Pyrene	10 U	10 U	10 U	10 U	10 UJ	10 U	10 U	10 U	10 UJ	10 U	10 UJ	10 U	10 U	10 U	10 U	10 UJ	10 U	10 U	50
Benzo(a)anthracene	10 U	10 U	10 U	10 U	10 UJ	10 U	10 U	10 U	10 UJ	10 U	10 UJ	10 U	10 U	10 U	10 U	10 UJ	10 U	10 U	0.002
Chrysene	10 U	10 U	10 U	10 U	10 UJ	10 U	10 U	10 U	10 UJ	10 U	10 UJ	10 U	10 U	10 U	10 U	10 UJ	10 U	10 U	0.002
Bis(2-ethylhexyl)phthalate	NA	NA	NA	2 U	2.1 U	10 U	10 U	10 U	2.1 J	10 U	10 UJ	10 U	10 U	10 U	1.6 J	10 UJ	10 U	10 U	5
Benzo(b)fluoranthene	10 U	10 U	10 U	10 U	10 UJ	10 U	10 U	10 U	10 UJ	10 U	10 UJ	10 U	10 U	10 U	10 U	10 UJ	10 U	10 U	0.002
Benzo(k)fluoranthene	10 U	10 U	10 U	10 U	10 UJ	10 U	10 U	10 U	10 UJ	10 U	10 UJ	10 U	10 U	10 U	10 U	10 UJ	10 U	10 U	0.002
Benzo(a)pyrene	10 U	10 U	10 U	10 U	10 UJ	10 U	10 U	10 U	10 UJ	10 U	10 UJ	10 U	10 U	10 U	10 U	10 UJ	10 U	10 U	ND
Indeno(1,2,3-cd)pyrene	10 U	10 U	10 U	10 U	10 UJ	10 U	10 U	10 UJ	10 UJ	10 UJ	10 UJ	10 UJ	10 U	10 U	10 U	10 UJ	10 U	10 UJ	0.002
Dibenzo(a,h)anthracene	10 U	10 U	10 U	10 U	10 UJ	10 U	10 U	10 UJ	10 UJ	10 UJ	10 UJ	10 UJ	10 U	10 U	10 U	10 UJ	10 U	10 UJ	NA
Benzo(g,h,i)perylene	10 U	10 U	10 U	10 U	10 UJ	10 U	10 U	10 UJ	10 UJ	10 UJ	10 UJ	10 UJ	10 U	10 U	10 U	10 UJ	10 U	10 UJ	NA
Total SVOCs	None Detected	None Detected	None Detected	None Detected	None Detected	11.0	None Detected	None Detected	2.1	None Detected	None Detected	None Detected	7.2 J	None Detected	6.5 J	None Detected	2	9.0	
Total SVOC TICs	None Detected	None Detected	None Detected	4.9	270.7 J	12.01	666.1 NJ	4.5 NJ	None Detected	4.7 NJ	10.5 J	None Detected	None Detected	170 NJ	None Detected	16.8	18.4 J	None Detected	*Not Available*
Total SVOCs & SVOC TICs	None Detected	None Detected	None Detected	4.9	270.7	23.0	666.1	4.5	2.1	4.7	10.5 J	0.0	7.2	170.0	6.5	16.8	20.4	9.0	

Table 2.5.2C
690 Saint Paul Street
NYSDEC Brownfield Cleanup Program - Soil Management Plan NYSDEC BCP ID No. C828159
Summary of Detected Metals in Dedicated Monitoring Well Groundwater Samples
Results in Micrograms per Liter (µg/L) or Parts Per Billion (PPB)

Sample ID	Groundwater Samples																			
	690-BW-01	BW-01	***BW-01 (Oil)	***RECN+S (Oil)	690-BW-02	690-BW-02 (DUPLICATE)	690-BW-02	690-BW-03	690-BW-04	690-BW-05	***690-BW-05-Oil	690-BW-06	690-BW-07	690-BW-07-DUP-1	690-BW-08	690-FIELD BLANK	690-BW-03	690-BW-04	690-BW-06	
Area of Concern	AOC #6	AOC #6	AOC #6	AOC #6	AOC #6	AOC #6	AOC #6	AOC #6	AOC #1	AOC #1	AOC #1	AOC #1	AOC #1	AOC #1	AOC #8	NA	AOC #6	AOC #1	AOC #1	
Sample Interval*	9.8'-17.3' BGS	9.8'-17.3' BGS	9.8'-17.3' BGS	"7'-9' BGS	7'-17' BGS	7'-17' BGS	7'-17' BGS	9.8'-19.8' BGS	5.7'-13.2' BGS	8.7'-18.7' BGS	8.7'-18.7' BGS	4.5'-14.5' BGS	11'-21' BGS	11'-21' BGS	14.5'-24.5' BGS	NA	9.8'-19.8' BGS	5.7'-13.2' BGS	4.5'-14.5' BGS	
Sample Collection Date	9/15/2010	11/5/2012	11/11/2010	11/11/2010	9/15/2010	9/15/2010	1/15/2013	9/15/2010	9/15/2010	11/11/2010	11/11/2010	11/11/2010	11/10/2010	11/10/2010	11/10/2010	9/15/2010	10/30/2012	10/30/2012	10/30/2012	NYSDEC Part 703 Groundwater Standards and TOGS 1.1.1
TAL Metals																				
Aluminum	66.0 U	66.0 U	1,400 U	17700	427	403	282	66.0 U	92.4 B	79.6 J	9,600 U	66.0 U	66.0 U	66.0 U	66.0 U	66.0 U	66 U	269	66 U	100
Antimony	10 B	9.3 U	290 U	220 U	9.3 U	9.3 U	9.3 U	9.3 U	9.3 U	9.3 U	280 U	9.3 U	9.3 U	9.3 U	33.7	9.3 U	13.5 J	9.3 U	14.5 J	3
Arsenic	4.3 U	4.3 U	320 U	760	4.3 U	4.3 U	4.3 U	4.3 U	4.3 U	4.3 U	500 J	4.3 U	4.3 U	4.3 U	4.3 U	4.3 U	5.3 J	4.3 J	4.3 U	25
Barium	104 B	125 J	87 J	1,100 J	274	260	214	122 B	136 B	121.0 J	2,400 J	62.8 J	55.5 J	53.9 J	231 J	1.9 B	84.5 J	145 J	65 J	1,000
Beryllium	0.26 U	0.26 U	1.2 U	1.4 U	0.26 U	0.26	0.26 U	0.26 U	0.26 U	0.26 U	2.5 U	0.26 U	0.26 U	0.26 U	0.26 U	0.26 U	0.26 U	0.26 U	0.26 U	3
Cadmium	0.89 U	0.89 U	12 U	8.5 U	0.89 U	0.89 U	0.89 U	0.89 U	0.89 U	0.89 U	11 U	0.89 U	0.89 U	0.89 U	0.89 U	0.89 U	0.89 U	0.89 U	0.89 U	5
Calcium	156,000	114,000	52,500	127,000	155,000	147,000	136,000	70,800	60,700	65,200	96,400	45,100	18,000	17,700	463,000	110 U	54,600	82,900	41,000	Not Listed
Chromium	0.64 U	0.64 U	15 U	1,000	1.2 B	1.1 B	0.66 J	0.64 U	0.64 U	0.64 U	340 J	0.64 U	31.1	26.3	0.64 U	0.64 U	0.64 U	0.73 J	0.64 U	50
Cobalt	0.67 U	0.67 U	34 U	25 U	0.67 U	0.67 U	0.70 J	0.67 U	0.67 U	0.67 U	51 J	0.67 U	0.67 U	0.67 U	0.67 U	0.67 U	0.67 U	0.67 U	0.67 U	5
Copper	3.6 U	3.6 U	85 U	380 J	3.6 U	3.6 U	3.6 U	3.8 B	3.6 U	3.6 U	1,600	3.6 U	3.6 U	3.6 U	3.6 U	3.6 U	3.6 U	3.6 U	3.6 U	200
Iron	104 B	31.0 U	2,200 J	11,900	13,300	13,500	8,130	3,460	782	654	357,000	184 U	8,620	5,250	482	31.0 U	624	944	445	300
Lead	4.2 U	4.2 U	130 U	270 J	4.2 U	4.2 U	4.2 U	4.2 U	4.2 U	4.2 U	1,400	4.2 U	4.2 U	4.2 U	4.2 U	4.2 U	4.2 U	4.2 U	4.2 U	25
Magnesium	40,000	28,100	31,600	29,100	32,700	30,500	20,300	12,800	12,100	21,800	13,900 J	11,200	13,300	13,400	173,000	76.0 U	10,500	17,500	8,890	35,000
Manganese	613	585	270 J	570 J	236	228	347	119	64.5	33.1 J	2,400	40.0 J	54.5	39.5 J	35.9 J	10.0 U	88.5	210	29.8 J	300
Mercury	0.028 U	0.028 U	2.1 U	2.2 U	0.028 U	0.028 U	0.028 U	0.028 U	0.028 U	0.028 U	2.3 U	0.028 U	0.028 U	0.028 U	0.028 U	0.028 U	0.035 U	0.028 U	0.028 U	0.7
Nickel	0.85 U	1.2 J	33 U	47 J	6.2 B	6.5 B	2.5 J	1.2 B	0.96 B	0.85 U	300 J	1.7 J	1.6 J	0.95 J	1.8 J	0.85 U	1.3 J	3.0 J	1.3 J	100
Potassium	11,800	6,840	32,400 J	6,800 J	28,100	28,100	13,700 J	17,600	11,000	9,970	6,100 J	15,900	29,700	30,900	34,000	76.0 U	14,200	8,910	9,410	Not Listed
Selenium	12.0 U	12.0 U	490 U	360 U	12.0 U	12.0 U	12.0 U	12.0 U	12.0 U	12.0 U	470 U	12.0 U	12.0 U	12.0 U	12.0 U	12.0 U	12.0 U	12.0 U	12.0 U	10
Silver	6.9 U	6.9 U	49 U	36 U	6.9 U	6.9 U	6.9 U	6.9 U	6.9 U	6.9 U	47 U	6.9 U	6.9 U	6.9 U	6.9 U	6.9 U	6.9 U	6.9 U	6.9 U	50
Sodium	72,300	32,700	39,800	25,600 J	124,000	118,000	74,000	251,000	281,000	260,000	10,400 J	215,000	1,570,000	1,600,000	649,000	297.0 B	202,000	112,000	187,000	20,000
Thallium	6.2 U	6.2 U	170 U	130 U	6.2 U	6.2 U	6.2 U	6.2 U	6.2 U	6.2 U	160 U	6.2 U	6.2 U	6.2 U	6.2 U	6.2 U	6.2 U	6.2 U	6.2 U	8
Vanadium	1.1 U	1.1 U	46 U	140 J	1.1 U	1.1 U	1.1 U	1.1 U	1.1 U	1.1 U	470 J	1.1 U	3.1 J	2.4 J	1.1 U	1.1 U	1.1 U	1.6 J	1.1 U	14
Zinc	25.0 B	4.9 U	140 U	2,100	42.5 B	42.9 B	21.9 J	19.1 B	66.0	14.6 U	7,400	14.1 U	75.6	45.8 J	13.9 U	4.9 U	4.9 U	41.6 J	4.9 U	2,000

TAL Metals analysis by United States Environmental Protection Agency (USEPA) SW846 Methods 6010 (TAL Metals) and 7471 (Mercury)

B - denotes that a "trace" concentration was detected below the reporting limit and equal to or above the detection limit. U - Indicates that the constituent was not detected above the indicated method detection limit (MDL).

N - Indicates spiked sample recovery not within control limits.

J – Indicates that the constituent was positively identified; but the associated numerical value is the approximate concentration of the constituent in the sample.

Bold type indicates that the constituent was detected at a concentration above the Part 375-6 Restricted Residential Soil Cleanup Objectives.

Highlighted type indicates that the constituent was detected at a concentration above the NYSDEC Part 703 Groundwater Standards and TOGS 1.1.1.

Indicates sample is a DUPLICATE of the sample preceding this sample.

*Refers to screened interval or length of open rock, depending on well construction.

Brown highlighted type indicates parameter is shown on Select Metals figure.

***This is a sample of product and is not representative of pesticide concentrations in dissolved groundwater. Recovery wells RW-West and RW-East were previously designated REC-N and REC-S.

Table 2.5.2C
690 Saint Paul Street
NYSDEC Brownfield Cleanup Program - Soil Management Plan NYSDEC BCP ID No. C828159
Summary of Detected Metals in Dedicated Monitoring Well Groundwater Samples
Results in Micrograms per Liter (µg/L) or Parts Per Billion (PPB)

	Groundwater Samples																	
Sample ID	690-BW-10	690-BW-11	690-BW-12	690-BW-12-DUP	690-FIELD BLANK	690-BW-09	690-BW-05	690-FIELD BLANK	690-MW-06	690-MW-07	690-MW-09	690-MW-10	690-BW-01	690-BW-07	690-BW-08	690-FIELD BLANK	690-MW-05	
Area of Concern	AOC #1	AOC #1	AOC #1	AOC #1	NA	AOC #1	AOC #1	NA	AOC #3/#8	AOC #8	AOC #2	AOC #2	AOC #6	AOC #1	AOC #8	NA	AOC #2	
Sample Interval*	3.5'-11.5' BGS	2.5'-7.5' BGS	2'-8.5' BGS	2'-8.5' BGS	NA	2'-12' BGS	8.7'-18.7' BGS	NA	5.3'-10.3' BGS	1.9'-11.9' BGS	6.25'-11.25' BGS	6.30'-11.30' BGS	9.8'-17.3' BGS	11'-21' BGS	14.5'-24.5' BGS	NA	6.7'-11.7' BGS	
Sample Collection Date	10/30/2012	10/30/2012	10/30/2012	10/30/2012	10/29/2012	11/2/2012	11/1/2012	11/2/2012	11/2/2012	11/2/2012	11/1/2012	11/1/2012	11/5/2012	11/5/2012	11/5/2012	11/5/2012	1/18/2013	NYSDEC Part 703 Groundwater Standards and TOGS 1.1.1
TAL Metals																		
Aluminum	82 J	66 U	66 U	66 U	66 U	66.0 U	73.4 J	66 U	131 J	1,260	66 U	1,200	66 U	66 U	254	66 U	482	100
Antimony	13.6 J	9.3 U	9.6 J	9.3 U	9.3 U	9.3 U	11.1 J	9.3 U	9.3 U	9.3 U	14.2 J	9.3 U	9.3 U	9.3 U	11.7 J	9.3 U	11.8 J	3
Arsenic	4.3 U	4.3 U	4.3 U	4.3 U	4.3 U	4.3 U	4.3 U	4.3 U	4.3 U	4.3 U	4.3 U	4.3 U	4.3 U	4.3 U	4.3 U	4.3 U	6.5 J	25
Barium	137 J	65.4 J	101 J	85.6 J	1.1 U	85.7 J	76.8 J	1.1 U	607	201	16 J	5 J	125 J	65.6 J	182 J	1.1 U	362	1,000
Beryllium	0.26 U	0.26 U	0.26 U	0.26 U	0.26 U	0.26 U	0.26 U	0.26 U	0.26 U	0.26 U	0.26 U	0.26 U	0.26 U	0.26 U	0.26 U	0.26 U	0.26 U	3
Cadmium	0.89 U	0.89 U	0.89 U	0.89 U	0.89 U	0.89 U	0.89 U	0.89 U	0.89 U	0.89 U	0.89 U	0.89 U	0.89 U	0.89 U	0.89 U	0.89 U	0.89 U	5
Calcium	119,000	65,600	127,000	55,400	110 U	131,000	46,400	110 U	286,000	477,000	184,000	155,000	114,000	251,000	486,000	110 U	527,000	Not Listed
Chromium	0.64 U	1.5 J	0.64 U	0.64 U	0.64 U	0.64 U	0.64 U	0.64 U	0.64 U	3.7 J	1.5 J	1.9 J	0.64 U	15.90 J	0.64 U	0.64 U	1.4 J	50
Cobalt	0.67 U	0.67 U	3.7 J	0.67 U	0.67 U	1.7 J	0.67 U	0.67 U	0.67 U	1.6 J	0.67 U	8.60 J	0.67 U	0.75 J	1.3 J	0.67 U	0.67 U	5
Copper	3.6 U	6.0 J	3.6 U	3.6 U	3.6 U	3.6 U	3.6 U	3.6 U	3.6 U	5.2 J	3.6 U	3.6 U	3.6 U	5.7 J	4.6 J	3.6 U	3.6 U	200
Iron	791	37.9 J	1,520	547	31 U	911	3,910	31 U	199 J	2,210	43.5 J	730	31 U	7,270	4,980	31 U	907	300
Lead	4.2 U	4.2 U	4.2 U	4.2 U	4.2 U	4.2 U	4.2 U	4.2 U	4.2 U	4.2 U	4.2 U	4.2 U	4.2 U	4.2 U	4.2 U	4.2 U	6.9 J	25
Magnesium	27,900	13,700	31,100	10,700	76 U	28,300	12,800	76.0 U	45,300	114,000	58,500	41,800	28,100	7,250	154,000	76 U	141,000	35,000
Manganese	85.1	10.0 U	552	86.4	10.0 U	281	57.6	10.0 U	468	707	22.4 J	184	585.0	76.7	128	10 U	71.1	300
Mercury	0.067 U	0.028 U	0.028 U	0.028 U	0.032 J	0.078 J	0.028 U	0.028 U	0.061 J	0.062 J	0.084 J	0.028 U	0.028 U	0.028 U	0.028 U	0.028 U	0.068 J	0.7
Nickel	2.1 J	1.9 J	4.9 J	0.94 J	0.85 U	11.1 J	1.4 J	0.85 U	2.3 J	7.1 J	0.9 J	13.5 J	1.2 J	0.85 U	5.4 J	0.85 U	4.7 J	100
Potassium	12,200	7,890	8,660	14,000	116 U	16,800	7,470	76.9 U	20,600	29,400	2,300	3,680	6,840	12,100	42,800	160 U	27,600 J	Not Listed
Selenium	12.0 U	12.0 U	12.0 U	12.0 U	12.0 U	12.0 U	12.0 U	12.0 U	12.0 U	12.0 U	12.0 U	12.0 U	12.0 U	12.0 U	12.0 U	12.0 U	12.0 U	10
Silver	6.9 U	6.9 U	6.9 U	6.9 U	6.9 U	6.9 U	6.9 U	6.9 U	6.9 U	6.9 U	6.9 U	6.9 U	6.9 U	6.9 U	6.9 U	6.9 U	6.9 U	50
Sodium	104,000	72,700	73,300	202,000	159 J	25,000	256,000	518 J	577,000	654,000	145,000	126,000	32,700	1,30,00	46,800	738 J	3,470,000	20,000
Thallium	6.2 U	6.2 U	6.2 U	6.2 U	6.2 U	6.2 U	6.2 U	6.2 U	6.2 U	6.2 U	6.2 U	6.2 U	6.2 U	6.2 U	6.2 U	6.2 U	6.2 U	8
Vanadium	1.1 U	1.1 U	1.1 U	1.1 U	1.1 U	1.1 U	1.1 U	1.1 U	1.1 U	2.3 J	1.1 U	1.1 U	1.1 U	1.1 U	1.1 U	1.1 U	1.1 U	14
Zinc	5.9 J	13.6 J	3,320	6.3 J	4.9 U	11.9 J	4.9 U	4.9 U	4.9 U	7.6 J	4.9 U	24.9 J	4.9 U	13.5 J	9.8 J	4.9 U	7.4 J	2,000

TAL Metals analysis by United States Environmental Protection Agency (USEPA) SW846 Methods 6010 (TAL Metals) and 7471 (Mercury)

B - denotes that a "trace" concentration was detected below the reporting limit and equal to or above the detection limit. U - Indicates that the constituent was not detected above the indicated method detection limit (MDL).

N - Indicates spiked sample recovery not within control limits.

J – Indicates that the constituent was positively identified; but the associated numerical value is the approximate concentration of the constituent in the sample.

Bold type indicates that the constituent was detected at a concentration above the Part 375-6 Restricted Residential Soil Cleanup Objectives.

Highlighted type indicates that the constituent was detected at a concentration above the NYSDEC Part 703 Groundwater Standards and TOGS 1.1.1.

Indicates sample is a DUPLICATE of the sample preceding this sample.

*Refers to screened interval or length of open rock, depending on well construction.

Brown highlighted type indicates parameter is shown on Select Metals figure.

***This is a sample of product and is not representative of pesticide concentrations in dissolved groundwater. Recovery wells RW-West and RW-East were previously designated REC-N and REC-S.

Table 2.5.2D
690 Saint Paul Street
NYSDEC Brownfield Cleanup Program - Site Management Plan - NYSDEC BCP ID No. C828159
Summary of Detected Pesticides in Dedicated Monitoring Well Groundwater Samples
Results in Micrograms per Liter (µg/L) or Parts Per Billion

	Groundwater Samples																				
Sample ID	**690-BW-01**	***BW-01 (Oil)**	**690-BW-02**	**690-BW-2 (DUPLICATE)**	**690-BW-03**	**690-BW-04**	**690-FIELD BLANK**	**690-BW-07**	**690-BW-07-DUP-1**	**690-BW-08**	**690-BW-05**	***690-BW-05-Oil**	**690-BW-06**	***RECN+S (Oil)**	**690-MW-07**	**690-MW-06**	**690-MW-10**	**690-MW-09**	**690-BW-05**	**690-FIELD BLANK**	**690-MW-05**	
Area of Concern	AOC #6	AOC #6	AOC #6	AOC #6	AOC #6	AOC #1	NA	AOC #1	AOC #1	AOC #8	AOC #1	AOC #1	AOC #1	AOC #6	AOC #8	AOC #3/ #8	AOC #2	AOC #2	AOC #1	NA	AOC #2	
Sample Interval*	9.8'-17.3' BGS	9.8'-17.3' BGS	7'-17' BGS	7'-17' BGS	9.8'-19.8' BGS	5.7'-13.2' BGS	NA	11'-21' BGS	11'-21' BGS	14.5'-24.5' BGS	8.7'-18.7' BGS	8.7'-18.7' BGS	4.5'-14.5' BGS	~7'-9' BGS	1.9'-11.9' BGS	5.3'-10.3' BGS	6.30'-11.30' BGS	6.25'-11.25' BGS	8.7'-18.7' BGS	NA	6.7'-11.7' BGS	
Sample Collection Date	9/15/10	11/11/2010	9/15/10	9/15/10	9/15/10	9/15/10	9/15/10	11/10/10	11/10/10	11/10/10	11/11/10	11/11/2010	11/11/10	11/11/2010	11/2/12	11/2/12	11/1/12	11/1/12	11/1/12	11/2/12	1/18/2013	
Pesticides																						**NYSDEC Part 703 Groundwater Standards**
alpha-BHC	0.050 U	51 U	0.050 UJ	0.050 UJ	0.050 UJ	0.050 U	0.050 UJ	0.050 U	0.050 U	0.050 U	0.050 U	51 U	0.050 U	510 U	0.050 U	0.050 U	0.050 U	0.050 U	0.050 U	0.050 U	0.050 U	0.01
beta-BHC	0.050 U	51 U	0.050 UJ	0.050 UJ	0.050 UJ	0.050 U	0.050 UJ	0.050 U	0.050 U	0.050 U	0.050 U	51 U	0.050 U	510 U	0.050 U	0.050 U	0.050 U	0.050 U	0.050 U	0.050 U	0.050 U	0.04
delta-BHC	0.050 U	51 U	0.050 UJ	0.050 UJ	0.050 UJ	0.050 U	0.050 UJ	0.050 U	0.050 U	0.050 U	0.36 J	51 U	0.050 U	510 U	0.050 U	0.050 U	0.050 U	0.050 U	0.050 U	0.050 U	0.050 U	0.04
gamma-BHC (Lindane)	0.050 U	51 U	0.050 UJ	0.050 UJ	0.050 UJ	0.050 U	0.050 UJ	0.050 U	0.050 U	0.050 U	0.16 J	51 U	0.050 U	510 U	0.050 U	0.050 U	0.050 U	0.050 U	0.23 J	0.050 U	0.050 U	0.05
Heptachlor	0.050 U	51 U	0.050 UJ	0.050 UJ	0.050 UJ	0.050 U	0.050 UJ	0.050 U	0.050 U	0.050 U	0.55 J	51 U	0.050 U	510 U	0.050 U	0.050 U	0.050 U	0.050 U	0.050 U	0.050 U	0.050 U	0.04
Aldrin	0.050 U	51 U	0.050 UJ	0.050 UJ	0.050 UJ	0.050 U	0.050 UJ	0.050 U	0.050 U	0.050 U	0.050 U	51 U	0.050 U	510 U	0.050 U	0.050 U	0.050 U	0.050 U	0.050 U	0.050 U	0.050 U	50
Heptachlor Epoxide	0.050 U	51 U	0.050 UJ	0.050 UJ	0.050 UJ	0.050 U	0.050 UJ	0.050 U	0.050 U	0.050 U	0.050 U	51 U	0.050 U	2,500 J	0.050 U	0.050 U	0.050 U	0.050 U	0.050 U	0.050 U	0.050 U	0.03
Endosulfan I	0.050 U	51 U	0.050 UJ	0.050 UJ	0.050 UJ	0.050 U	0.050 UJ	0.050 U	0.050 U	0.050 U	0.050 U	51 U	0.050 U	510 U	0.050 U	0.050 U	0.050 U	0.050 U	0.050 U	0.050 U	0.050 U	ND*
Dieldrin	0.10 J	99 U	0.10 UJ	0.10 UJ	0.10 UJ	0.10 U	0.10 UJ	0.10 U	0.10 U	0.10 U	0.10 U	99 U	0.10 U	1,800 J	0.10 U	0.10 U	0.10 U	0.10 U	0.10 U	0.10 U	0.10 U	0.004
4,4'-DDE	0.10 U	99 U	0.10 UJ	0.10 UJ	0.10 UJ	0.10 U	0.10 UJ	0.10 U	0.10 U	0.10 U	0.10 U	220	0.10 U	1,200 J	0.10 U	0.10 U	0.10 U	0.10 U	0.10 U	0.10 U	0.10 U	0.2
Endrin	0.10 U	99 U	0.10 UJ	0.10 UJ	0.10 UJ	0.10 U	0.10 UJ	0.10 U	0.10 U	0.10 U	0.10 U	99 U	0.10 U	990 U	0.10 U	0.10 U	0.10 U	0.10 U	0.10 U	0.10 U	0.10 U	50
Endosulfan II	0.10 U	99 U	0.10 UJ	0.10 UJ	0.10 UJ	0.10 U	0.10 UJ	0.10 U	0.10 U	0.10 U	0.10 U	350 J	0.10 U	990 U	0.10 U	0.10 U	0.10 U	0.10 U	0.10 U	0.10 U	0.10 U	50
4,4'-DDD	0.10 U	99 U	0.10 UJ	0.10 UJ	0.10 UJ	0.10 U	0.10 UJ	0.10 U	0.10 U	0.10 U	0.10 U	650	0.10 U	3,300 J	0.10 U	0.10 U	0.10 U	0.10 U	0.10 U	0.10 U	0.10 U	0.3
Endosulfan Sulfate	0.10 U	99 U	0.10 UJ	0.10 UJ	0.10 UJ	0.10 U	0.10 UJ	0.10 U	0.10 U	0.10 U	0.10 U	99 U	0.10 U	1,100 J	0.10 U	0.10 U	0.10 U	0.10 U	0.10 U	0.10 U	0.10 U	50
4,4'-DDT	0.10 U	99 U	0.10 UJ	0.10 UJ	0.10 UJ	0.10 U	0.10 UJ	0.10 U	0.10 U	0.10 U	0.10 U	99 U	0.10 U	6,200 J	0.10 U	0.10 U	0.10 U	0.10 U	0.10 U	0.10 U	0.10 U	0.2
Methoxychlor	0.050 U	510 U	0.050 UJ	0.050 UJ	0.050 UJ	0.050 U	0.050 UJ	ND<0.50 U	0.050 U	ND<0.50 U	0.050 U	510 U	0.050 U	5,100 U	0.050 U	0.050 U	0.050 U	0.050 U	0.050 U	0.050 U	0.050 U	35
Endrin Ketone	0.10 U	99 U	0.10 UJ	0.10 UJ	0.10 UJ	0.10 U	0.10 UJ	0.10 U	0.10 U	0.10 U	0.10 U	99 U	0.10 U	990 U	0.10 U	0.10 U	0.10 U	0.10 U	0.10 U	0.10 U	0.10 U	Not Listed
Endrin Aldehyde	0.10 U	99 U	0.10 UJ	0.10 UJ	0.10 UJ	0.10 U	0.10 UJ	0.10 U	0.10 U	0.10 U	0.10 U	99 U	0.10 U	990 U	0.10 U	0.10 U	0.10 U	0.10 U	0.10 U	0.10 U	0.10 U	Not Listed
alpha-Chlordane	0.050 U	51 U	0.050 UJ	0.050 UJ	0.050 UJ	0.050 U	0.050 UJ	0.050 U	0.050 U	0.050 U	0.050 U	51 U	0.050 U	510 U	0.050 U	0.050 U	0.050 U	0.050 U	0.050 U	0.050 U	0.050 U	0.05
gamma-Chlordane	0.050 U	51 U	0.050 UJ	0.050 UJ	0.050 UJ	0.050 U	0.050 UJ	0.050 U	0.050 U	0.050 U	0.050 U	330 J	0.050 U	940 J	0.050 U	0.050 U	0.050 U	0.050 U	0.050 U	0.050 U	0.050 U	0.05
Toxaphene	5 U	5,100 U	5 UJ	5 UJ	5 UJ	5 U	5 UJ	5 U	5 U	5 U	5 U	5,100 U	5 U	51,000 U	5 U	5 U	5 U	5 U	5 U	5 U	5 U	0.06
Total Pesticides	0.100 J	None Detected	None Detected	None Detected	None Detected	None Detected	None Detected	None Detected	None Detected	None Detected	1.07	1,550	None Detected	17,040	None Detected	None Detected	None Detected	None Detected	0.230	None Detected	None Detected	*Not Available*

Notes:

Pesticide analysis by United States Environmental Protection Agency (USEPA) Method SW846 8081.

J – Indicates that the constituent was positively identified; but the associated numerical value is the approximate concentration of the constituent in the sample. U - Indicates that the constituent was not detected.

ND* indicates a non-detectable concentration by the approved analytical methods referenced in NYCRR Part 700.3

P = Used for CLP methodology only. For pesticide analytes, when a difference for detected concentrations between the two GC columns is greater than 25%, the lower of the two values is reported on the data page and flagged with a "P".

Highlighted type indicates that the constituent was detected at a concentration above the NYSDEC Part 703 Groundwater Standards.

Indicates sample is a DUPLICATE of the sample preceding this sample.

*Refers to screened interval or length of open rock, depending on well construction.

***This is a sample of product and is not representative of pesticide concentrations in dissolved groundwater. Recovery wells RW-West and RW-East were previously designated REC-N and REC-S.

Table 2.5.2E
690 Saint Paul Street
NYSDEC Brownfield Cleanup Program - Soil Management Plan
NYSDEC BCP ID No. C828159

Summary of Detected Polychlorinated Biphenyls in Dedicated Monitoring Well Groundwater Samples
Results in Micrograms per Liter (µg/L) or Parts Per Billion (PPB)

Sample ID	Groundwater Samples																			NYSDEC Part 703 Groundwater Standards
	690-BW-07	690-BW-7-DUP-1	690-BW-08	690-BW-05	***690-BW-05 - Oil	690-BW-06	690-FIELD BLANK	690-BW-01	***BW-01 (Oil)	***RECN+S (Oil)	690-BW-02	690-BW-02 (DUPLICATE)	690-BW-03	690-BW-04	690-MW-07	690-MW-06	690-MW-10	690-MW-09	690-MW-FIELD BLANK	690-MW-05	
Area of Concern	AOC #1	AOC #1	AOC #8	AOC #1	AOC #1	AOC #1	NA	AOC #6	AOC #6	AOC #6	AOC #6	AOC #6	AOC #6	AOC #1	AOC #8	AOC #3/#8	AOC #2	AOC #2	NA	AOC #2	
Sample Interval*	11'-21' BGS	11'-21' BGS	14.5'-24.5' BGS	8.7'-18.7' BGS	8.7'-18.7' BGS	4.5'-14.5' BGS	NA	9.8'-17.3' BGS	9.8'-17.3' BGS	~7'-9' BGS	7'-17' BGS	7'-17' BGS	9.8'-19.8' BGS	5.7'-13.2' BGS	1.9'-11.9' BGS	5.3'-10.3' BGS	6.30'-11.30' BGS	6.25'-11.25' BGS	NA	6.7'-11.7' BGS	
Sample Collection Date	11/10/10	11/10/10	11/11/10	11/11/10	11/11/10	11/10/10	9/15/10	9/15/10	11/11/2010	11/11/2010	9/15/10	9/15/10	9/15/10	9/15/10	11/2/12	11/2/12	11/1/12	11/1/12	11/2/12	1/18/2013	
PCBs																					
Aroclor 1016	1.0 U	1.0 U	1.0 U	1.0 U	990 U	1.0 U	1.1 UJ	1.0 U	990 U	9900 U	1.0 UJ	1.3 U	1.0 U	1.0 UJ	1.0 U	1.0 U	1.0 U	1.0 U	1.0 U	1.0 U	N/A
Aroclor 1221	1.0 U	1.0 U	1.0 U	1.0 U	990 U	1.0 U	1.1 UJ	1.0 U	990 U	9900 U	1.0 UJ	1.3 U	1.0 U	1.0 UJ	1.0 U	1.0 U	1.0 U	1.0 U	1.0 U	1.0 U	N/A
Aroclor 1232	1.0 U	1.0 U	1.0 U	1.0 U	990 U	1.0 U	1.1 UJ	1.0 U	990 U	9900 U	1.0 UJ	1.3 U	1.0 U	1.0 UJ	1.0 U	1.0 U	1.0 U	1.0 U	1.0 U	1.0 U	N/A
Aroclor 1242	1.0 U	1.0 U	1.0 U	1.0 U	990 U	1.0 U	1.1 UJ	1.0 U	990 U	9900 U	1.0 UJ	1.3 U	1.0 U	1.0 UJ	1.0 U	1.0 U	1.0 U	1.0 U	1.0 U	1.0 U	N/A
Aroclor 1248	1.0 U	1.0 U	1.0 U	1.0 U	990 U	1.0 U	1.1 UJ	1.0 U	990 U	9900 U	1.0 UJ	1.3 U	1.0 U	1.0 UJ	1.0 U	1.0 U	1.0 U	1.0 U	1.0 U	1.0 U	N/A
Aroclor 1254	1.0 U	1.0 U	1.0 U	1.0 UJ	12,000 J	1.0 U	1.1 UJ	1.0 U	990 U	83,000 J	1.0 UJ	1.3 U	1.0 U	1.0 UJ	1.0 U	1.0 U	1.0 U	1.0 U	1.0 U	1.0 U	N/A
Aroclor 1260	1.0 U	1.0 U	1.0 U	1.0 U	990 U	1.0 U	1.1 UJ	1.0 U	990 U	9900 U	1.0 UJ	1.3 U	1.0 U	1.0 UJ	1.0 U	1.0 U	1.0 U	1.0 U	1.0 U	1.0 U	N/A
Total PCBs	None Detected	None Detected	None Detected	None Detected	12,000	None Detected	None Detected	None Detected	None Detected	83,000	None Detected	None Detected	None Detected	None Detected	None Detected	None Detected	None Detected	None Detected	None Detected	None Detected	0.09

Notes:

PCB analysis by United States Environmental Protection Agency (USEPA) Method SW846 8082.

J – Indicates that the constituent was positively identified; but the associated numerical value is the approximate concentration of the constituent in the sample.

U - Indicates that the constituent was not detected.

Indicates sample is a DUPLICATE of the sample preceding this sample.

*Refers to screened interval or length of open rock, depending on well construction.

***This is a sample of product and is not representative of pesticide concentrations in dissolved groundwater. Recovery wells RW-West and RW-East were previously designated REC-N and REC-S.

Highlighted type indicates that the constituent was detected at a concentration above the NYSDEC Part 703 Groundwater Standards.

TABLE 2.5.4A
Building 14A
NYSDEC Brownfield Cleanup Program - -Soil Management Plan
NYSDEC BCP ID No. C828159

Summary of Detected VOCs in Soil Vapor Samples
Results in Micrograms per Cubic Meter (µg/m^3)
(USEPA Method TO-15)

Parameter	CAS Number	Sub-Slab Soil Vapor Samples			NYSDOH Sub-Slab Vapor Concentration Decision Matrix (minimum action level) [1]	Indoor Air Samples				Outdoor Ambient Air	QA/QC Sample	NYSDOH Indoor Air Concentration (minimum action level) [1]	USEPA (2001) (BASE) Database [2]
		690-SV-3-O	690-SV-4-O	690-SV-5-O		690-SV-3-AMB-O	690-SV-4-AMB-O	690-SV-4-AMB-D	690-SV-5-AMB-O	690-OUTDOOR-O	690-TRIP BLANK-O		
		1/27/2010				1/27/2010					1/27/2010		
Volatile Organic Compounds (VOCs)													
Chloromethane	74-87-3	0.82 J	1.1	ND<0.31	NL	0.99	0.63	0.69	0.73	0.90	ND<0.31	NL	3.7
Chloroethane	75-00-3	ND<0.40	ND<0.40	0.35 J	NL	ND<0.40	ND<0.40	ND<0.40	ND<0.40	ND<0.40	ND<0.40	NL	<1.1
Chloroform	67-66-3	0.89	1.6	9.2	NL	1.1	0.60 J	1.6	140	0.89	ND<0.74	NL	1.1
Acetone	67-64-1	16	49	75	NL	7.2	4.1	4.3	13	15	ND<0.72	NL	98.9
Isopropyl Alcohol	67-63-0	ND<0.37	4.9	ND<0.37	NL	1.5	3.1	4.8	3.1	2.6	ND<0.37	NL	NL
Carbon Disulfide	75-15-0	3.9	4.1	15	NL	ND<0.47	ND<0.47	ND<0.47	1.1	ND<0.47	ND<0.47	NL	4.2
Carbon Tetrachloride	56-53-5	0.38 J	0.26 J	ND<0.96	<5**	**0.38**	**0.45**	**0.45**	**0.38**	0.45	ND<0.26	<0.25**	<1.3
cis-1,2-Dichloroethene	156-59-2	0.32 J	1.1	2.6	<100***	ND<0.60	1.0	**3.7**	0.38	ND<0.60	ND<0.60	<3 ***	<1.9
Methylene Chloride	75-09-2	2.1	6.8	14	60*	1.1	0.67	0.81	3.2	0.74	ND<0.53	60 *	10.0
Hexane	110-54-3	2.9	64	950	NL	2.4	0.6	0.6	1.8	0.68	ND<0.54	NL	10.2
Methyl Ethyl Ketone	78-93-3	1.3	2.9	ND<1.2	NL	0.69	ND<0.90	0.72 J	1.1	ND<1.2	ND<1.2	NL	12.0
Cyclohexane	110-82-7	1.6	36	660	NL	1.3	ND<0.52	ND<0.52	0.73	ND<0.52	ND<0.52	NL	NL
Ethyl acetate	141-78-6	0.77 J	1.9	ND<0.92	NL	ND<0.92	ND<0.92	ND<0.92	1.9	ND<0.92	ND<0.92	NL	5.4
Benzene	71-43-2	0.78	1.8	19	NL	0.49	0.45	0.45 J	1.40	0.49	ND<0.49	NL	9.4
Bromodichloromethane	75-27-4	ND<1.0	ND<1.0	ND<1.0	NL	ND<1.0	ND<1.0	ND<1.0	1.70	ND<1.0	ND<1.0	NL	NL
1,4-Dichlorobenzene	106-46-7	ND<0.92	ND<0.92	ND<0.92	NL	ND<0.92	ND<0.92	ND<0.92	1.10	ND<0.92	ND<0.92	NL	5.5
Heptane	142-82-5	1.7	60	500	NL	1.3	ND<0.62	0.46 J	0.79	ND<0.62	ND<0.62	NL	NL
Tetrachloroethene	127-18-4	ND<1.0	0.83 J	0.83 J	<100***	ND<1.0	2.4	**58**	**41**	ND<1.0	ND<1.0	<3***	15.9
1,1,1-Trichloroethane	71-55-6	ND<0.83	1.4	2.2	<100***	ND<0.83	ND<0.83	ND<0.83	ND<0.83	ND<0.83	ND<0.83	<3***	20.6
1,2-Dichloroethane	107-06-2	ND<0.62	ND<0.62	0.70 J	NL	ND<0.62	ND<0.62	ND<0.62	ND<0.62	ND<0.62	ND<0.62	NL	<0.9
Trichloroethene	79-01-6	0.98	3.3	3.9	5*	0.27	1.3	**6.5**	3.9	ND<0.22	ND<0.22	<5.0 **	4.2
2,2,4-Trimethylpentane	540-84-1	ND<0.71	1.3	60	NL	ND<0.71	ND<0.71	ND<0.71	ND<0.71	ND<0.71	ND<0.71	NL	NL
Toluene	108-88-3	2.0	5.4	7.6	NL	2.1	1.2	1.2	7.2	0.88	ND<0.57	NL	43
Trichlorofluromethane (Freon 11)	75-69-4	1.1	0.91	0.80 J	NL	1.0	1.0	1.0	1.1	1.0	ND<0.86	NL	18.1
Dichlordifluoromethane (Freon 12)	75-71-8	2.4	1.8	1.6	NL	2.1	2.0	2.1	2.0	2.1	ND<0.75	NL	16.5
Ethylbenzene	100-41-4	1.3	2.1	2.7	NL	ND<0.66	ND<0.66	ND<0.66	1.1	ND<0.66	ND<0.66	NL	5.7
Xylene (m,p)	1330-20-7	1.8	3.5	4.6	NL	ND<1.3	ND<1.3	ND<1.3	4.0	ND<1.3	ND<1.3	NL	22.2
Xylene (o)	95-47-6	0.75	1.3	1.6	NL	ND<0.66	ND<0.66	ND<0.66	6.2	ND<0.66	ND<0.66	NL	7.9
Xylene (total)	1330-20-7	2.55	4.8	6.2	NL	ND<1.3	ND<1.3	ND<1.3	10.2	ND<1.3	ND<1.3	NL	NL
Vinyl Chloride	75-01-4	ND<0.39	ND<0.39	0.21 J	<5**	ND<0.39	ND<0.39	ND<0.39	0.23	ND<0.10	ND<0.10	<0.25**	<1.9
Styrene	100-42-5	0.69	1.1	1.7	NL	ND<0.65	ND<0.65	ND<0.65	ND<0.65	ND<0.65	ND<0.65	NL	1.9
4-Ethyltoluene	622-96-8	ND<0.75	ND<0.75	0.85	NL	ND<0.75	ND<0.75	ND<0.75	73	0.55 J	ND<0.75	NL	3.6
1,3,5-Trimethylbenzene	108-67-8	ND<0.75	ND<0.75	ND<0.75	NL	ND<0.75	ND<0.75	ND<0.75	37	ND<0.75	ND<0.75	NL	3.7
1,2,4-Trimethylbenzene	95-63-6	0.60 J	0.75	2.0	NL	0.65 J	0.55 J	ND<1.1	72	1.0	ND<1.1	NL	9.5

1. New York State Department of Health (NYSDOH), Guidance for Evaluating Soil Vapor Intrusion in the State of New York. [Note: This Guidance uses a combination of indoor air and sub-slab soil vapor when comparing to the matrices. In addition, for compounds not listed in the matrices an overall site approach is employed which utilizes the USEPA BASE Database (see 2. below) as typical background for commercial buildings and also uses the outdoor air sample, refer to Guidance document for details.]

2. USEPA Building Assessment and Survey Evaluation (BASE) Database (90th Percentile). As recommended in Section 3.2.4 of the NYSDOH Guidance (Refer to Footnote "1") this database is referenced for the indoor air sampling results.

***** = Guideline Values obtained from Table 3.1, NYSDOH, Guidance for Evaluating Soil Vapor Intrusion in the State of New York.

****** = Guideline Value obtained from Soil Vapor/Indoor Air Matrix 1 (minimum action level), NYSDOH, Guidance for Evaluating Soil Vapor Intrusion in the State of New York.

*** = Guidance Value obtained from Soil Vapor/Indoor Air Matrix 2 (minimum action level), NYSDOH Guidance for Evaluating Soil Vapor Intrusion in the State of New York.

ND<0.83 - Denotes that the specific compound not detected above the reported laboratory method detection limit.

J - Denotes that the associated numerical value is an estimated quantity due to variance from quality control limits..

Bolded entry denotes that the compound was detected at a concentration great than the NYSDOH Sub-Slab Soil Vapor Concentration Decision Matrix (minimum action level).

Shaded entry denotes that the compound was detected at a concentration greater than the USEPA BASE Database (90th Percentile).

NL denotes that the USEPA and/or NYSDOH does not list a Target Concentration and/or Guidance Value for this compound.

TABLE 2.5.4B
Building 16
NYSDEC Brownfield Cleanup Program - -Soil Management Plan
NYSDEC BCP ID No. C828159

Summary of Detected VOCs in Soil Vapor Samples
Results in Micrograms per Cubic Meter (µg/m^3)
(USEPA Method TO-15)

Parameter	CAS Number	Sub-Slab Soil Vapor Samples			NYSDOH Sub-Slab Vapor Concentration Decision Matrix (minimum action level) [1]	Indoor Air Samples			Outdoor Ambient Air	QA/QC Sample	NYSDOH Indoor Air Concentration (minimum action level) [1]	USEPA (2001) (BASE) Database [2]
		690-SV-6-O	690-SV-7-O	690-SV-8-O		690-SV-6-AMB-O	690-SV-7-AMB-O	690-SV-8-AMB-O	690-OUTDOOR-O	690-TRIP BLANK-O		
		1/27/2010				1/27/2010				1/27/2010		
Volatile Organic Compounds (VOCs)												
Chloromethane	74-87-3	ND<0.31	ND<0.31	0.52	NL	0.99	1.1	1.1	0.90	ND<0.31	NL	3.7
Chloroethane	75-00-3	ND<0.40	ND<0.40	0.43	NL	ND<0.40	ND<0.40	ND<0.40	ND<0.40	ND<0.40	NL	<1.1
Chloroform	67-66-3	400	1.0	1.5	NL	3.0	2.5	2.5	0.89	ND<0.74	NL	1.1
Acetone	67-64-1	25	35	51	NL	12	18	20	15	ND<0.72	NL	98.9
Isopropyl Alcohol	67-63-0	9.2	8.7	15	NL	4.3	13	12	2.6	ND<0.37	NL	NL
Carbon Disulfide	75-15-0	0.92	5.9	20	NL	ND<0.47	ND<0.47	ND<0.47	ND<0.47	ND<0.47	NL	4.2
Carbon Tetrachloride	56-53-5	0.45 J	ND<0.96	ND<0.96	<5**	**0.38**	**0.45**	**0.45**	0.45	ND<0.26	<0.25**	<1.3
cis-1,2-Dichloroethene	156-59-2	15.00	0.73	1.4	<100***	ND<0.60	ND<0.60	ND<0.60	ND<0.60	ND<0.60	<3***	<1.9
Methylene Chloride	75-09-2	3.2	3.8	8.5	60 *	1.8	1.4	1.3	0.74	ND<0.53	60 *	10.0
Hexane	110-54-3	0.93	3.3	32	NL	1.4	3.0	1.9	0.68	ND<0.54	NL	10.2
Methyl Ethyl Ketone	78-93-3	1.3	3.8	3.9	NL	1.0	1.9	1.7	ND<1.2	ND<1.2	NL	12.0
Cyclohexane	110-82-7	0.59	3.0	66	NL	0.38 J	1.0	0.70	ND<0.52	ND<0.52	NL	NL
Ethyl acetate	141-78-6	0.73 J	1.1	1.4	NL	ND<0.92	ND<0.92	0.95	ND<0.92	ND<0.92	NL	5.4
Benzene	71-43-2	0.45 J	1.6	2.7	NL	0.68	1.8	1.30	0.49	ND<0.49	NL	9.4
Bromodichloromethane	75-27-4	3.4	ND<1.0	ND<1.0	NL	ND<1.0	ND<1.0	ND<1.0	ND<1.0	ND<1.0	NL	NL
Heptane	142-82-5	0.75	2.9	8.7	NL	0.54 J	0.92	1.2	ND<0.62	ND<0.62	NL	NL
Tetrachloroethene	127-18-4	2.6	1.0	ND<1.0	<100***	ND<1.0	ND<1.0	ND<1.0	ND<1.0	ND<1.0	<3***	15.9
1,1-Dichloroethane	75-34-3	0.66	ND<0.62	ND<0.62	NL	ND<0.62	ND<0.62	ND<0.62	ND<0.62	ND<0.62	NL	<0.7
1,1,1-Trichloroethane	71-55-6	1.0	8.0	1.1	<100***	ND<0.83	ND<0.83	ND<0.83	ND<0.83	ND<0.83	<3***	20.6
1,2-Dichloroethene	107-06-2	ND<0.62	ND<0.62	0.45 J	NL	ND<0.62	ND<0.62	ND<0.62	ND<0.62	ND<0.62	NL	<0.9
Trichloroethene	79-01-6	**21**	**6.0**	3.6	5*	ND<0.22	**0.38**	**0.38**	ND<0.22	ND<0.22	<0.25**	4.2
2,2,4-Trimethylpentane	540-84-1	ND<0.71	0.52 J	1.9	NL	ND<0.71	0.66 J	ND<0.71	ND<0.71	ND<0.71	NL	NL
Toluene	108-88-3	2.2	5.8	5.2	NL	3.0	5.0 J	5.6	0.88	ND<0.57	NL	43
Trichlorofluromethane (Freon 11)	75-69-4	1.0	1.8	2.1	NL	1.7	2.8	2.9	1.0	ND<0.86	NL	18.1
Dichlordifluoromethane (Freon 12)	75-71-8	2.6	23	16	NL	3.8	6.4	5.9	2.1	ND<0.75	NL	16.5
Ethylbenzene	100-41-4	2.2	4.6	4.0	NL	0.97	6.4	3.3	ND<0.66	ND<0.66	NL	5.7
Xylene (m,p)	1330-20-7	3.2	7.5	7.1 J	NL	3.9	40	18	ND<1.3	ND<1.3	NL	22.2
Xylene (o)	95-47-6	1.2	2.9	3.4	NL	1.8	23	11	ND<0.66	ND<0.66	NL	7.9
Xylene (total)	1330-20-7	4.4	10.4	10.5	NL	5.7	63	29	ND<1.3	ND<1.3	NL	NL
Vinyl Chloride	75-01-4	1.4	**13.3**	ND<0.10	<5**	ND<0.10	ND<0.10	ND<0.10	ND<0.10	ND<0.10	<0.25**	<1.9
Styrene	100-42-5	1.0	2.8	2.6	NL	ND<0.65	ND<0.65	ND<0.65	ND<0.65	ND<0.65	NL	1.9
4-Ethyltoluene	622-96-8	ND<0.75	0.65 J	1.9	NL	2.6	21	7.5	0.55 J	ND<0.75	NL	3.6
1,3,5-Trimethylbenzene	108-67-8	ND<0.75	1.0	3.2	NL	3.0	54	17	ND<0.75	ND<0.75	NL	3.7
1,2,4-Trimethylbenzene	95-63-6	0.70 J	2.7	8.8	NL	10	110	45	1.0	ND<1.1	NL	9.5

1. New York State Department of Health (NYSDOH), Guidance for Evaluating Soil Vapor Intrusion in the State of New York. [Note: This Guidance uses a combination of indoor air and sub-slab soil vapor when comparing to the matrices. In addition, for compounds not listed in the matrices an overall site approach is employed which utilizes the USEPA BASE Database (see 2. below) as typical background for commercial buildings and also uses the outdoor air sample, refer to Guidance document for details.]

2. USEPA Building Assessment and Survey Evaluation (BASE) Database (90th Percentile). As recommended in Section 3.2.4 of the NYSDOH Guidance (Refer to Footnote "1") this database is referenced for the indoor air sampling results.

* = Guideline Values obtained from Table 3.1, NYSDOH, Guidance for Evaluating Soil Vapor Intrusion in the State of New York.

** = Guideline Value obtained from Soil Vapor/Indoor Air Matrix 1 (minimum action level), NYSDOH, Guidance for Evaluating Soil Vapor Intrusion in the State of New York.

*** = Guidance Value obtained from Soil Vapor/Indoor Air Matrix 2 (minimum action level), NYSDOH Guidance for Evaluating Soil Vapor Intrusion in the State of New York.

ND<0.83 - Denotes that the specific compound not detected above the reported laboratory method detection limit.

J - Denotes that the associated numerical value is an estimated quantity due to variance from quality control limits..

Bolded entry denotes that the compound was detected at a concentration great than the NYSDOH Sub-Slab Soil Vapor Concentration Decision Matrix (minimum action level).

Shaded entry denotes that the compound was detected at a concentration greater than the USEPA BASE Database (90th Percentile).

NL denotes that the USEPA and/or NYSDOH does not list a Target Concentration and/or Guidance Value for this compound.

TABLE 2.5.4C
GEVA Theatre Scene Shop
NYSDEC Brownfield Cleanup Program - -Soil Management Plan
NYSDEC BCP ID No. C828159

Summary of Detected VOCs in Soil Vapor Samples
Results in Micrograms per Cubic Meter (µg/m^3)
(USEPA Method TO-15)

Parameter	CAS Number	Sub-Slab Soil Vapor Samples		NYSDOH Sub-Slab Vapor Concentration Decision Matrix (minimum action level) [1]	Indoor Air Samples		Outdoor Ambient Air	QA/QC Sample	NYSDOH Indoor Air Concentration (minimum action level) [1]	USEPA (2001) (BASE) Database [2]
		690-SV-1-O	690-SV-2-O		690-SV-1-AMB-O	690-SV-2-AMB-O	690-OUTDOOR-O	690-TRIP BLANK-O		
		1/27/2010			1/27/2010			1/27/2010		
Volatile Organic Compounds (VOCs)										
Chloromethane	74-87-3	0.80	0.59	NL	0.69	0.67	0.90	ND<0.31	NL	3.7
Chloroform	67-66-3	0.55 J	0.89	NL	ND<0.74	ND<0.74	0.89	ND<0.74	NL	1.1
Acetone	67-64-1	19	14	NL	12	16	15	ND<0.72	NL	98.9
Isopropyl Alcohol	67-63-0	5.2	ND<0.37	NL	3.9	3.2	2.6	ND<0.37	NL	NL
Carbon Disulfide	75-15-0	1.0	0.82	NL	ND<0.47	ND<0.47	ND<0.47	ND<0.47	NL	4.2
Carbon Tetrachloride	56-53-5	0.26 J	0.32 J	<5**	0.38	0.32	0.45	ND<0.26	<5**	<1.3
cis-1,2-Dichloroethene	156-59-2	0.69	1.2	<100***	ND<0.60	ND<0.60	ND<0.60	ND<0.60	<3 ***	<1.9
Methylene Chloride	75-09-2	3.7	6.7	60*	0.81	1.1	0.74	ND<0.53	60*	10.0
Hexane	110-54-3	4.2	1.7	NL	1.4	1.0	0.68	ND<0.54	NL	10.2
Methyl Ethyl Ketone	78-93-3	3.2	2.8	NL	0.99	1.2	ND<1.2	ND<1.2	NL	12.0
Methyl Isobutyl Ketone	108-10-1	ND<1.2	0.46 J	NL	ND<1.2	ND<1.2	ND<1.2	ND<1.2	NL	NL
Cyclohexane	110-82-7	1.3	0.42 J	NL	0.45 J	ND<0.52	ND<0.52	ND<0.52	NL	NL
Ethyl acetate	141-78-6	0.59 J	1.1	NL	ND<0.92	ND<0.92	ND<0.92	ND<0.92	NL	5.4
Benzene	71-43-2	0.65	0.52	NL	0.71	0.81	0.49	ND<0.49	NL	9.4
Heptane	142-82-5	2.4	0.75	NL	0.67	0.62	ND<0.62	ND<0.62	NL	NL
1,1,1-Trichloroethane	71-55-6	5.7	ND<0.83	<100***	ND<0.83	ND<0.83	ND<0.83	ND<0.83	<3 ***	20.6
Trichloroethene	79-01-6	2.1	2.9	5*	1.3	0.49	ND<0.22	ND<0.22	5*	4.2
Toluene	108-88-3	4.7	3.0	NL	3.4	2.4	0.88	ND<0.57	NL	43
Trichlorofluromethane (Freon 11)	75-69-4	1.7	1.5	NL	1.1	1.1	1.0	ND<0.86	NL	18.1
Dichlordifluoromethane (Freon 12)	75-71-8	3.8	3.4	NL	2.1	2.0	2.1	ND<0.75	NL	16.5
Trichlorotrifluoroethane (Freon 113)	76-13-1	0.86 J	ND<1.2	NL	ND<1.2	ND<1.2	ND<1.2	ND<1.2	NL	3.5
Ethylbenzene	100-41-4	4.5	2.5	NL	0.53 J	0.53 J	ND<0.66	ND<0.66	NL	5.7
Xylene (m,p)	1330-20-7	5.3	4.2	NL	1.5	1.5	ND<1.3	ND<1.3	NL	22.2
Xylene (o)	95-47-6	1.6	1.6	NL	0.44	0.44	ND<0.66	ND<0.66	NL	7.9
Xylene (total)	1330-20-7	6.9	5.8	NL	1.94	1.94	ND<1.3	ND<1.3	NL	NL
Styrene	100-42-5	0.91	1.4	NL	ND<0.65	ND<0.65	ND<0.65	ND<0.65	NL	1.9
4-Ethyltoluene	622-96-8	ND<0.75	0.60 J	NL	ND<0.75	ND<0.75	0.55 J	ND<0.75	NL	3.6
1,3,5-Trimethylbenzene	108-67-8	ND<0.75	0.65 J	NL	ND<0.75	ND<0.75	ND<0.75	ND<0.75	NL	3.7
1,2,4-Trimethylbenzene	95-63-6	0.7 J	1.6	NL	0.50 J	0.60 J	1.0	ND<0.75	NL	9.5

1. New York State Department of Health (NYSDOH), Guidance for Evaluating Soil Vapor Intrusion in the State of New York. [Note: This Guidance uses a combination of indoor air and sub-slab soil vapor when comparing to the matrices. In addition, for compounds not listed in the matrices an overall site approach is employed which utilizes the USEPA BASE Database (see 2. below) as typical background for commercial buildings and also uses the outdoor air sample, refer to Guidance document for details.]

2. USEPA Building Assessment and Survey Evaluation (BASE) Database (90th Percentile). As recommended in Section 3.2.4 of the NYSDOH Guidance (Refer to Footnote "1") this database is referenced for the indoor air sampling results.

***** = Guideline Values obtained from Table 3.1, NYSDOH, Guidance for Evaluating Soil Vapor Intrusion in the State of New York.

****** = Guideline Value obtained from Soil Vapor/Indoor Air Matrix 1 (minimum action level), NYSDOH, Guidance for Evaluating Soil Vapor Intrusion in the State of New York.

*** = Guidance Value obtained from Soil Vapor/Indoor Air Matrix 2 (minimum action level), NYSDOH Guidance for Evaluating Soil Vapor Intrusion in the State of New York.

ND<0.83 - Denotes that the specific compound not detected above the reported laboratory method detection limit.

J - Denotes that the associated numerical value is an estimated quantity due to variance from quality control limits..

NL denotes that the USEPA and/or NYSDOH does not list a Target Concentration and/or Guidance Value for this compound.

FIGURES

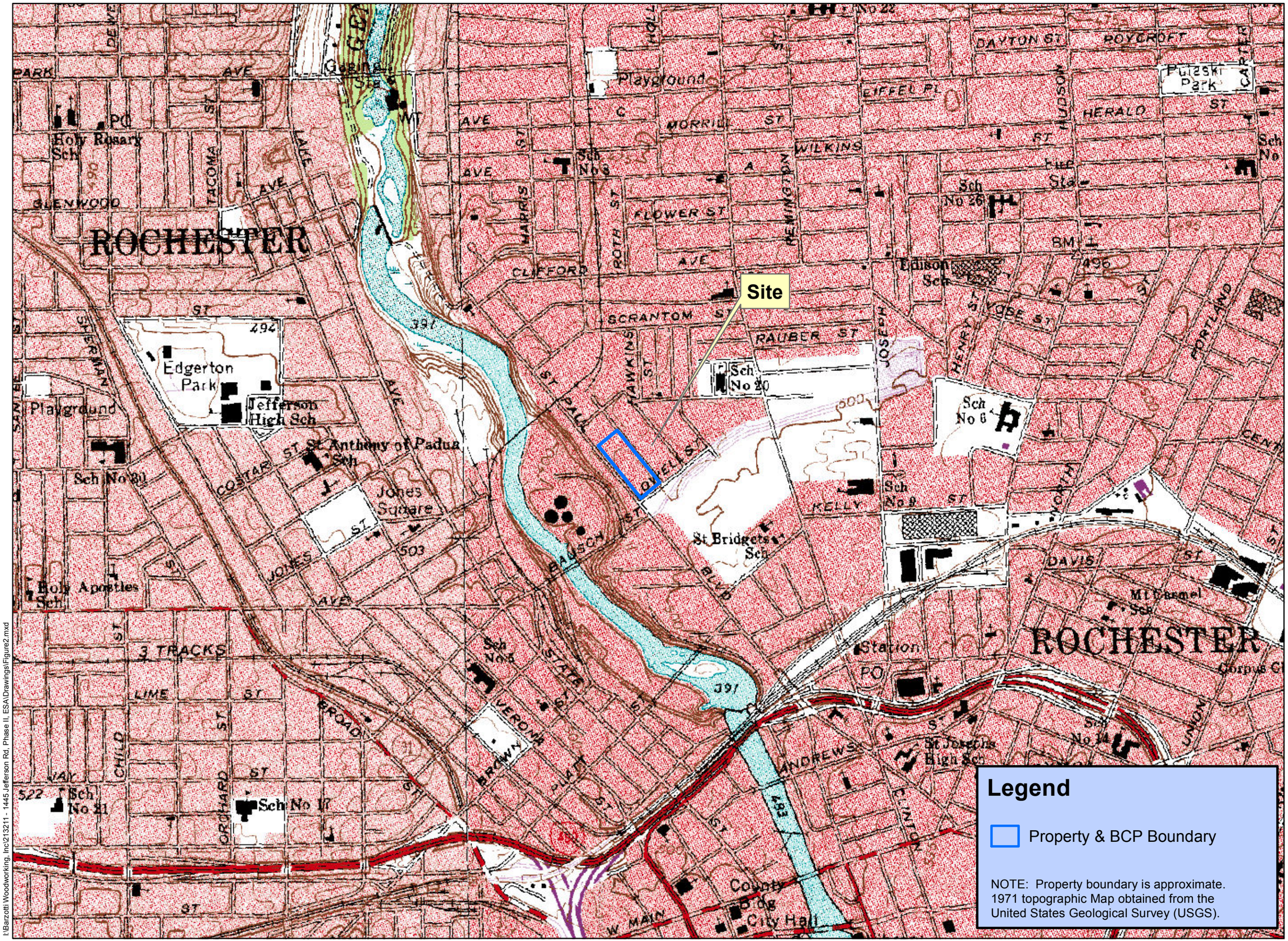

I:\Barzotti Woodworking, Inc\213211 - 1445 Jefferson Rd, Phase II, ESA\Drawings\Figure2.mxd

LABELLA Associates, D.P.C.
300 STATE STREET
ROCHESTER, NY 14614
P: (585) 454-6110
F: (585) 454-3066
www.labellapc.com
COPYRIGHT 2005

SITE LOCATION MAP

SITE MANAGEMENT PLAN:

BROWNFIELD CLEANUP PROGRAM

690 SAINT PAUL STREET ROCHESTER, NEW YORK

VOLUNTEER: GENESEE VALLEY REAL ESTATE COMPANY

N
W E
S

250 0 1,000

1 inch = 1,000 feet

INTENDED TO PRINT 11" X 17"

DATE; 7/31/2017

209280

FIGURE 1

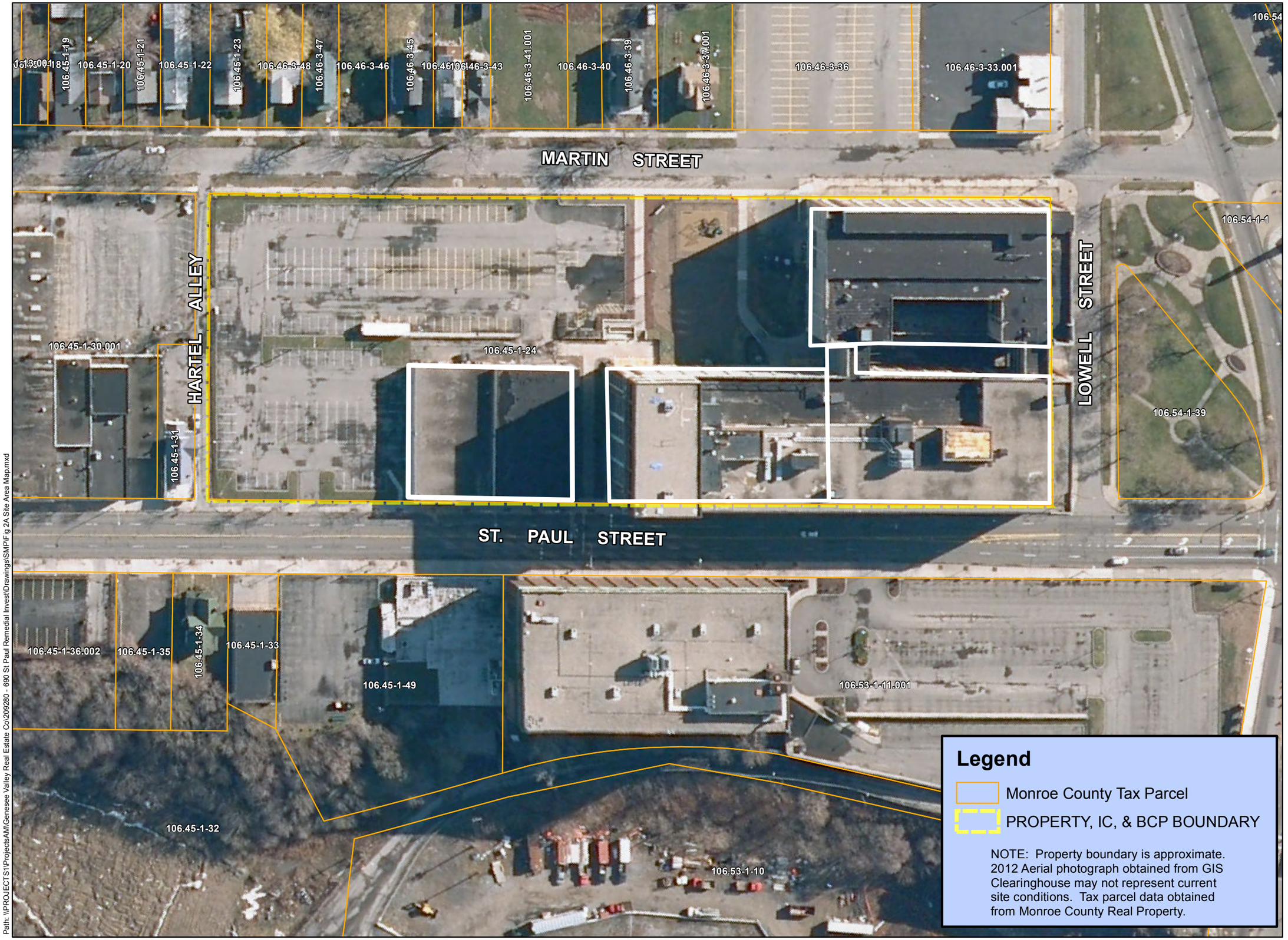

Legend

- Monroe County Tax Parcel
- PROPERTY, IC, & BCP BOUNDARY

NOTE: Property boundary is approximate. 2012 Aerial photograph obtained from GIS Clearinghouse may not represent current site conditions. Tax parcel data obtained from Monroe County Real Property.

Path: \\PROJECTS1\Projects\AM\Genesee Valley Real Estate Co\209280 - 690 St Paul Remedial Invest\Drawings\SMP\Fig 2A Site Area Map.mxd

LABELLA Associates, D.P.C.
300 STATE STREET
ROCHESTER, NY 14614
P: (585) 454-6110
F: (585)454-3066
www.labellapc.com
COPYRIGHT 2020

SITE LAYOUT MAP

SITE MANAGEMENT PLAN

BROWNFIELD CLEANUP PROGRAM

690 SAINT PAUL STREET ROCHESTER, NEW YORK

VOLUNTEER: GENESEE VALLEY REAL ESTATE COMPANY

0 20 40 80 Feet

1 inch = 80 feet

INTENDED TO PRINT 11" X 17"

DATE; 7/31/2017

209280

FIGURE 2A

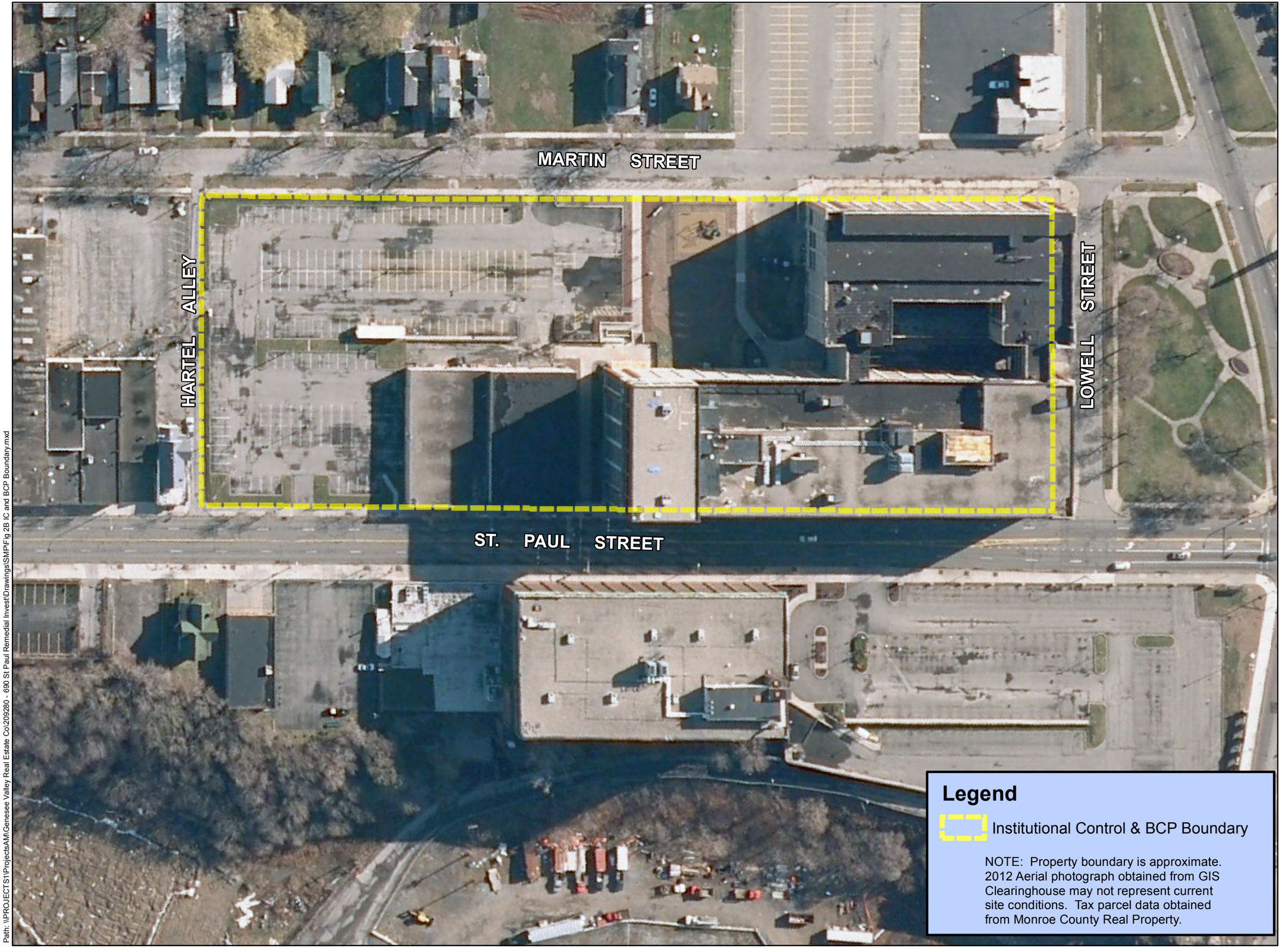

Legend

Institutional Control & BCP Boundary

NOTE: Property boundary is approximate. 2012 Aerial photograph obtained from GIS Clearinghouse may not represent current site conditions. Tax parcel data obtained from Monroe County Real Property.

LABELLA Associates, D.P.C.

300 STATE STREET
ROCHESTER, NY 14614
P: (585) 454-6110
F: (585)454-3066
www.labellapc.com
COPYRIGHT 2020

BCP AND INSTITUTIONAL CONTROLS BOUNDARY

SITE MANAGEMENT PLAN

BROWNFIELD CLEANUP PROGRAM

690 SAINT PAUL STREET ROCHESTER, NEW YORK

VOLUNTEER: GENESEE VALLEY REAL ESTATE COMPANY

STATE OF NEW YORK
DANIEL P. NOLL
No. 091896
LICENSED PROFESSIONAL ENGINEER

It is a violation of New York Education Law Article 145 Sec.7209, for any person, unless acting under the direction of a licensed architect, professional engineer, or land surveyor, to alter an item in any way. If an item bearing the seal of an architect, engineer, or land surveyor is altered; the altering architect, engineer, or land surveyor shall affix to the item their seal and notation "altered by" followed by their signature and date of such alteration, and a specific description of the alteration.

N E S W

0 20 40 80 Feet

1 inch = 80 feet

INTENDED TO PRINT 11" X 17"

DATE; 7/31/2017

209280

FIGURE 2B

Path: \\PROJECTS\Projects\AM\Genesee Valley Real Estate Co\209280 - 690 St Paul Remedial Invest\Drawings\SMP\Fig 2B IC and BCP Boundary.mxd

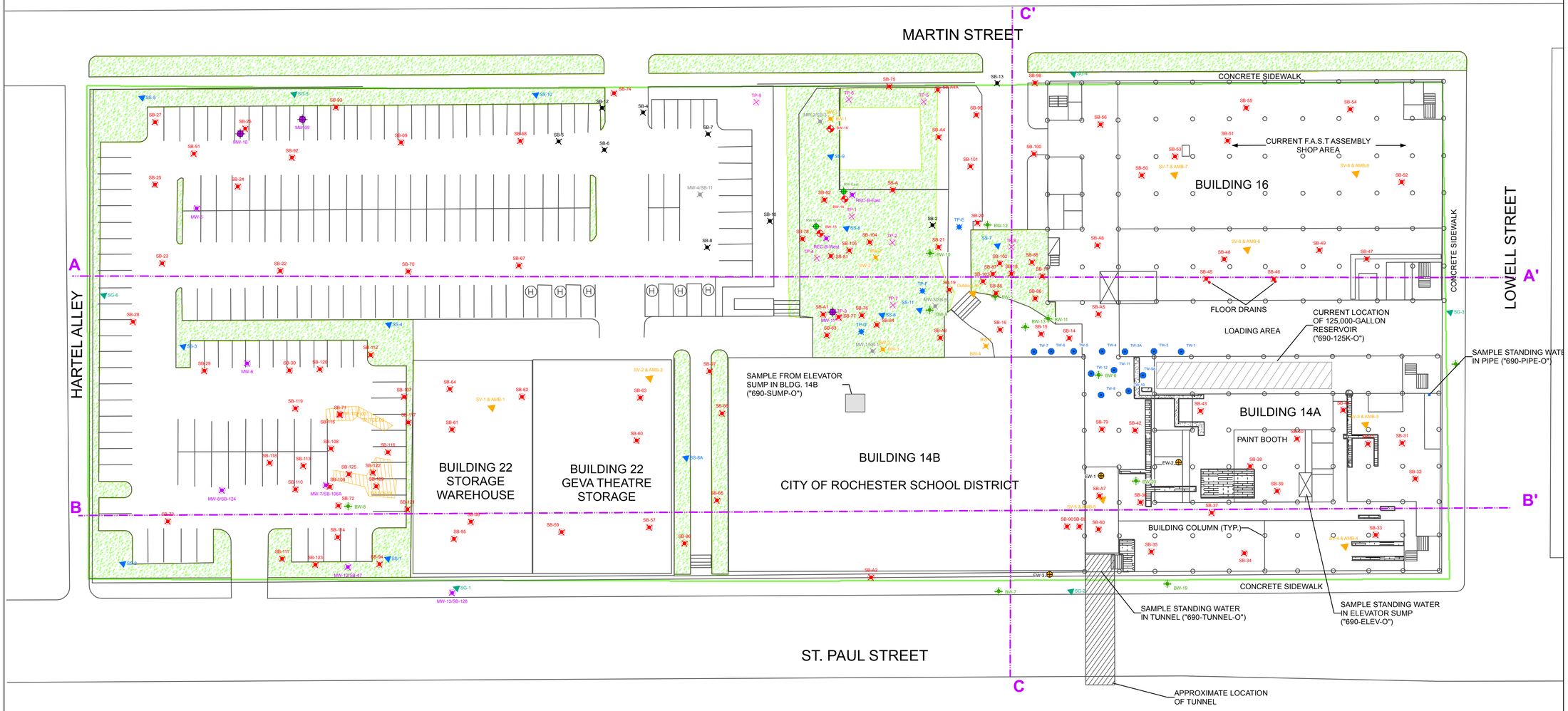

LEGEND

- COMPLETED PRE-BCP BEDROCK WELLS
- AOC #1 TREATMENT WELL
- AOC #1 EXTRACTION WELLS
- AOC #6C DPI RECOVERY WELLS
- AOC #6C ORIGINAL RECOVERY WELLS
- NEW OVERBURDEN MONITORING WELLS (OCT. 2012)
- COMPLETED BCP TEST PITS
- COMPLETED BCP SOIL BORING
- COMPLETED BCP OVERBURDEN WELLS
- COMPLETED BCP BEDROCK WELLS
- COMPLETED BCP SOIL GAS SAMPLE
- COMPLETED BCP SURFACE SOIL SAMPLE
- COMPLETED BCP SOIL VAPOR SAMPLE
- COMPLETED PRE-BCP OVERBURDEN WELL
- COMPLETED PRE-BCP SOIL BORING
- COMPLETED PRE-BCP BEDROCK WELLS
- COMPLETED PRE-BCP PHASE II TEST PIT
- COMPLETED TEST PITS JULY 2012
- FLOOR DRAIN
- WATER FILLED PIPE IN FLOOR
- CONCRETE FILLED FLOOR TRENCH (POSSIBLE FORMER PIPE CHASE)
- OPEN FLOOR TRENCH (POSSIBLE PIPE CHASE)
- GRASS COVERED MEDIAN
- STAIRWAY
- BCP BOUNDARY

Note:
(1) SITE PLAN DEVELOPED FROM BERO ASSOCIATES ARCHITECTS SITE PLAN FOR 690 SAINT PAUL STREET, ROCHESTER CHARTER SCHOOL SCIENCE AND TECHNOLOGY, DATED APRIL 11, 2000.
(2) CROSS SECTIONS A-A', B-B' AND C-C' ARE DISPLAYED ON FIGURES 4A THROUGH 4C, RESPECTIVELY.

LABELLA Associates, D.P.C.
300 STATE STREET
ROCHESTER, NY 14614
P: (585) 454-6110
F: (585)454-3066
www.labellapc.com
COPYRIGHT 2003

INVESTIGATION LOCATIONS

SITE MANAGEMENT PLAN

BROWNFIELD CLEANUP PROGRAM

690 SAINT PAUL STREET ROCHESTER, NEW YORK

VOLUNTEER: GENESEE VALLEY REAL ESTATE COMPANY

STATE OF NEW YORK
DANIEL P. NOLL
No. 081598
LICENSED PROFESSIONAL ENGINEER

It is a violation of New York Education Law Article 145 Sec.7209, for any person, unless acting under the direction of a licensed architect, professional engineer, or land surveyor, to alter an item in any way. If an item bearing the seal of an architect, engineer, or land surveyor is altered; the altering architect, engineer, or land surveyor shall affix to the item their seal and notation "altered by" followed by their signature and date of such alteration, and a specific description of the alteration.

N E W S

0 15 30 60 Feet

1 inch = 30 feet

INTENDED TO PRINT ANSI D

DATE; 7/31/2017

209280

FIGURE 3

Path: \\PROJECTS1\ProjectsAM\Genesee Valley Real Estate Co\209280 - 690 St Paul Remedial Invest\Drawings\SMP\Fig 3 - Prev Invest.mxd

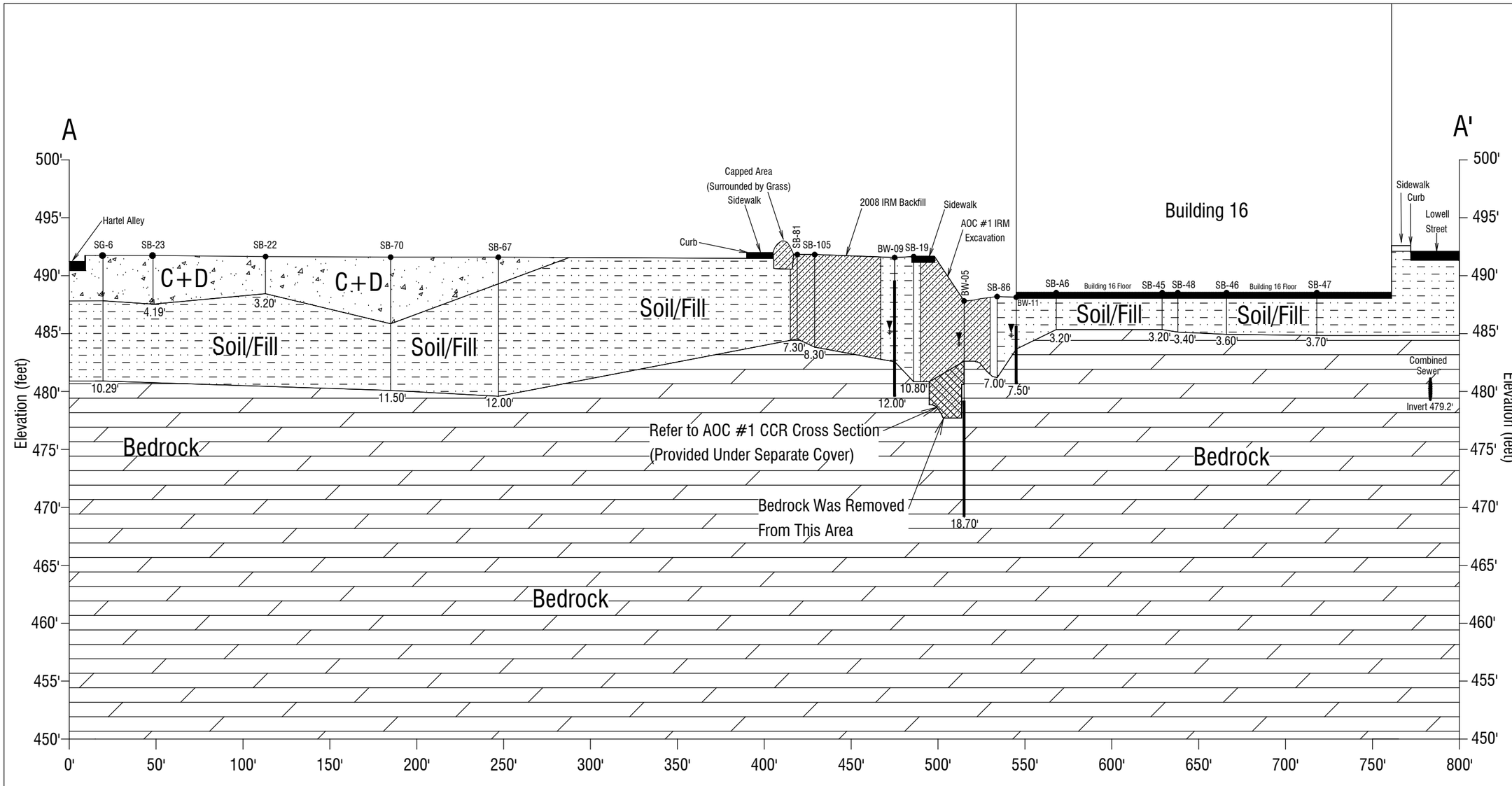

Vertical Exageration = 20 : 3

NOTES:

1. Formations based on interpretation of sub-surface test boring logs.
2. Subsurface formations inferred in areas below the terminal depth of borings, between borings, and beyond the first and last point.
3. 'C+D' refers to construction and demolition debris. This fill layer generally consisted of cinders, brick, concrete, scrap metal, and/or ash.
4. The soil/fill layer generally consisted of native soil with varying amounts of fill consisting of sand and gravel with traces of crushed asphalt.

LEGEND

- C+D
- IRM Backfill
- Soil/Fill
- Bedrock
- Bedrock Removed/IRM Backfill
- Soil Boring/Monitoring Well Location
- Monitoring Well Screened Interval
- 3.20' Depth to Well/Boring Bottom
- Static Groundwater Elevation

LABELLA Associates, D.P.C.
300 STATE STREET
ROCHESTER, NY 14614
P: (585) 454-6110
F: (585) 454-3066
www.labellapc.com

©Copyright © 2014

STATE OF NEW YORK
DANIEL P. ROLL
No. 091916
LICENSED PROFESSIONAL ENGINEER

It is a violation of New York Education Law Article 145 Sec.7209, for any person, unless acting under the direction of a licensed architect, professional engineer, or land surveyor, to alter an item in any way. If an item bearing the seal of an architect, engineer, or land surveyor is altered, the altering architect, engineer, or land surveyor shall affix to the item their seal and notation "altered by" followed by their signature and date of such alteration, and a specific description of the alteration.

PROJECT/CLIENT

SITE MANAGEMENT PLAN
690 ST. PAUL STREET
ROCHESTER, NY

GENESEE VALLEY REAL ESTATE COMPANY

DRAWING TITLE

GEOLOGIC CROSS SECTION
A-A'

DESIGNED BY: JS
DRAWN BY: IPJ
REVIEWED BY: IPJ

ISSUED FOR: FINAL

DATE: JANUARY 2014

PROJECT/DRAWING NUMBER
209280

FIGURE 4A

Intended To Be Printed On 11"X17"

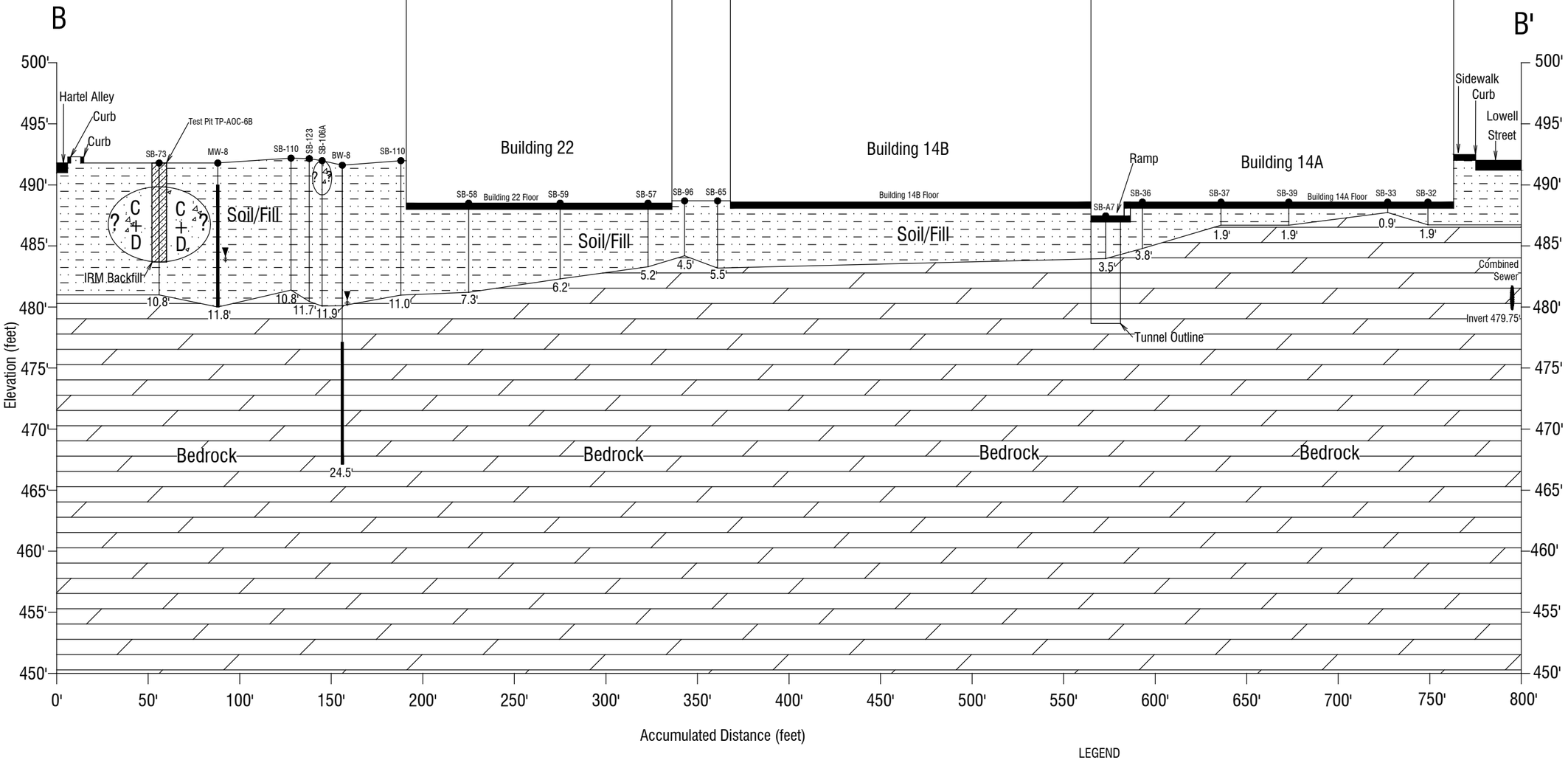

Vertical Exageration = 20 : 3

NOTES:

1. Formations based on interpretation of sub-surface test boring logs.
2. Subsurface formations inferred in areas below the terminal depth of borings, between borings, and beyond the first and last point.
3. 'C+D' refers to construction and demolition debris. This fill layer generally consisted of cinders, brick, concrete, scrap metal, and/or ash.
4. The soil/fill layer generally consisted of native soil with varying amounts of fill consisting of sand and gravel with traces of crushed asphalt.

LEGEND

- C+D
- Soil/Fill
- IRM Backfill
- Bedrock
- Soil Boring/Monitoring Well Location
- Monitoring Well Screened Interval
- 3.20' Depth to Well/Boring Bottom
- Static Groundwater Elevation
- ? Denotes Precise Extent of Fill Unknown

LABELLA Associates, D.P.C.
300 STATE STREET
ROCHESTER, NY 14614
P: (585) 454-6110
F: (585) 454-3066
www.labellapc.com

copyright © 2004

STATE OF NEW YORK
DANIEL P. NOLL
No. 091656
LICENSED PROFESSIONAL ENGINEER

It is a violation of New York Education Law Article 145 Sec 7209, for any person, unless acting under the direction of a licensed architect, professional engineer, or land surveyor, to alter an item in any way. If an item bearing the seal of an architect, engineer, or land surveyor is altered, the altering architect, engineer, or land surveyor shall affix to the item their seal and notation "altered by" followed by their signature and date of such alteration, and a specific description of the alteration.

PROJECT/CLIENT
SITE MANAGEMENT PLAN
690 ST. PAUL STREET
ROCHESTER, NY
GENESEE VALLEY REAL ESTATE COMPANY

DRAWING TITLE
GEOLOGIC CROSS SECTION
B-B'

DESIGNED BY: JG
DRAWN BY: PJ
REVIEWED BY: PJ

ISSUED FOR
FINAL

DATE: JANUARY 2014

PROJECT/DRAWING NUMBER
209280

FIGURE 4B

Intended To Be Printed On 11"X17"

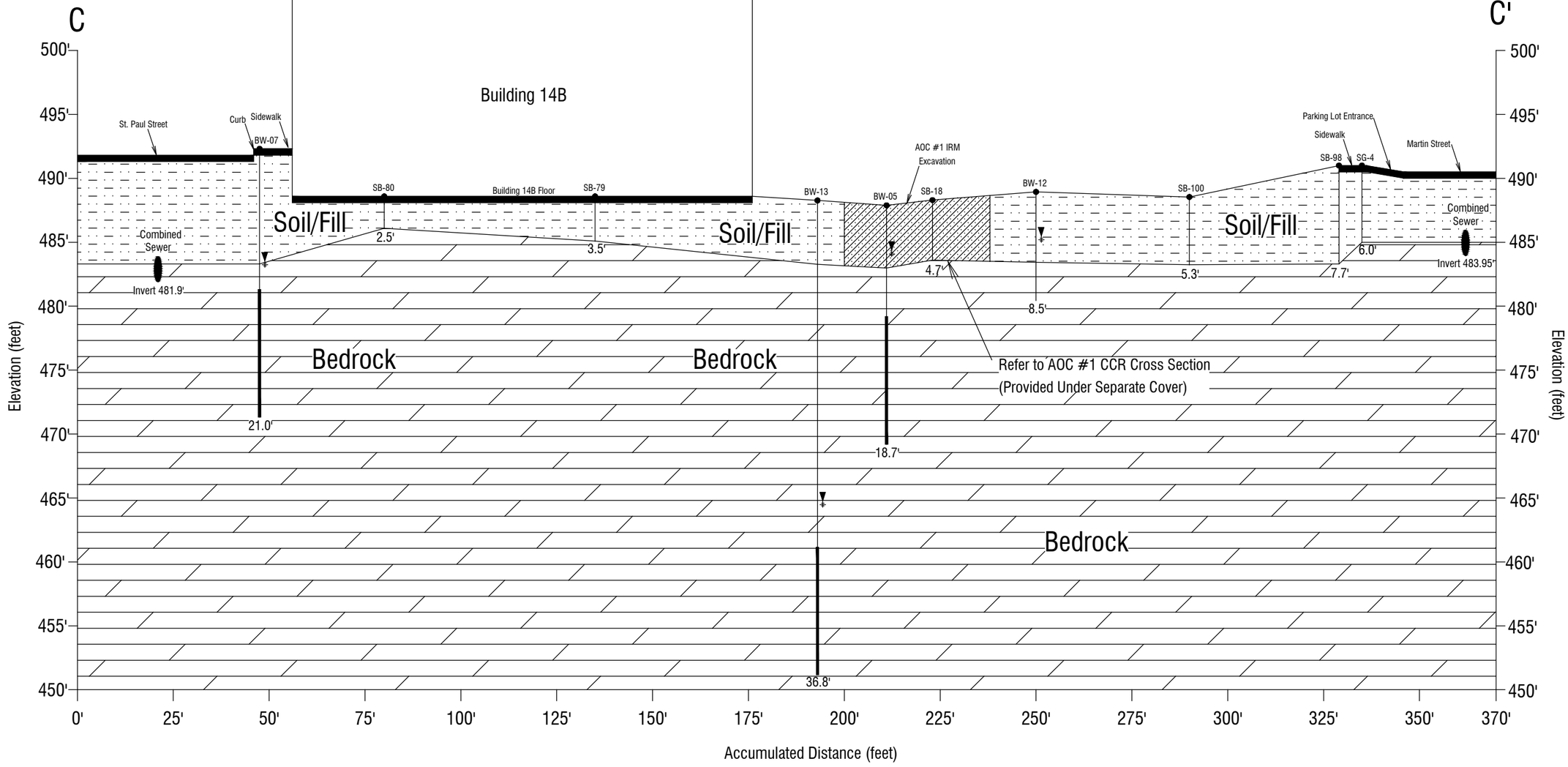

Vertical Exageration = 10 : 3

NOTES:

1. Formations based on interpretation of sub-surface test boring logs.
2. Subsurface formations inferred in areas below the terminal depth of borings, between borings, and beyond the first and last point.
3. 'C+D' refers to construction and demolition debris. This fill layer generally consisted of cinders, brick, concrete, scrap metal, and/or ash.
4. The soil/fill layer generally consisted of native soil with varying amounts of fill consisting of sand and gravel with traces of crushed asphalt.

LEGEND

- IRM Backfill
- Soil
- Bedrock
- Soil Boring/Monitoring Well Location
- Monitoring Well Screened Interval
- 3.20' Depth to Well/Boring Bottom
- Static Groundwater Elevation

LABELLA Associates, D.P.C.
300 STATE STREET
ROCHESTER, NY 14614
P: (585) 454-6110
F: (585) 454-3066
www.labellapc.com

copyright © 2004

STATE OF NEW YORK
DANIEL P. HOLT
No. 091508
LICENSED PROFESSIONAL ENGINEER

It is a violation of New York Education Law Article 145 Sec.7209, for any person, unless acting under the direction of a licensed architect, professional engineer, or land surveyor, to alter an item in any way. If an item bears the seal of an architect, engineer, or land surveyor, it is altered; the altering architect, engineer, or land surveyor shall affix to the item their seal and notation "altered by" followed by their signature and date of such alteration, and a specific description of the alteration.

PROJECT/CLIENT
SITE MANAGEMENT PLAN
690 ST. PAUL STREET
ROCHESTER, NY
GENESEE VALLEY REAL ESTATE COMPANY

DRAWING TITLE
GEOLOGIC CROSS SECTION
C-C'

DESIGNED BY: JS
DRAWN BY: PJ
REVIEWED BY: PJ

ISSUED FOR: FINAL
DATE: JANUARY 2014

PROJECT/DRAWING NUMBER
209280

FIGURE 4C

Intended To Be Printed On 11"X17"

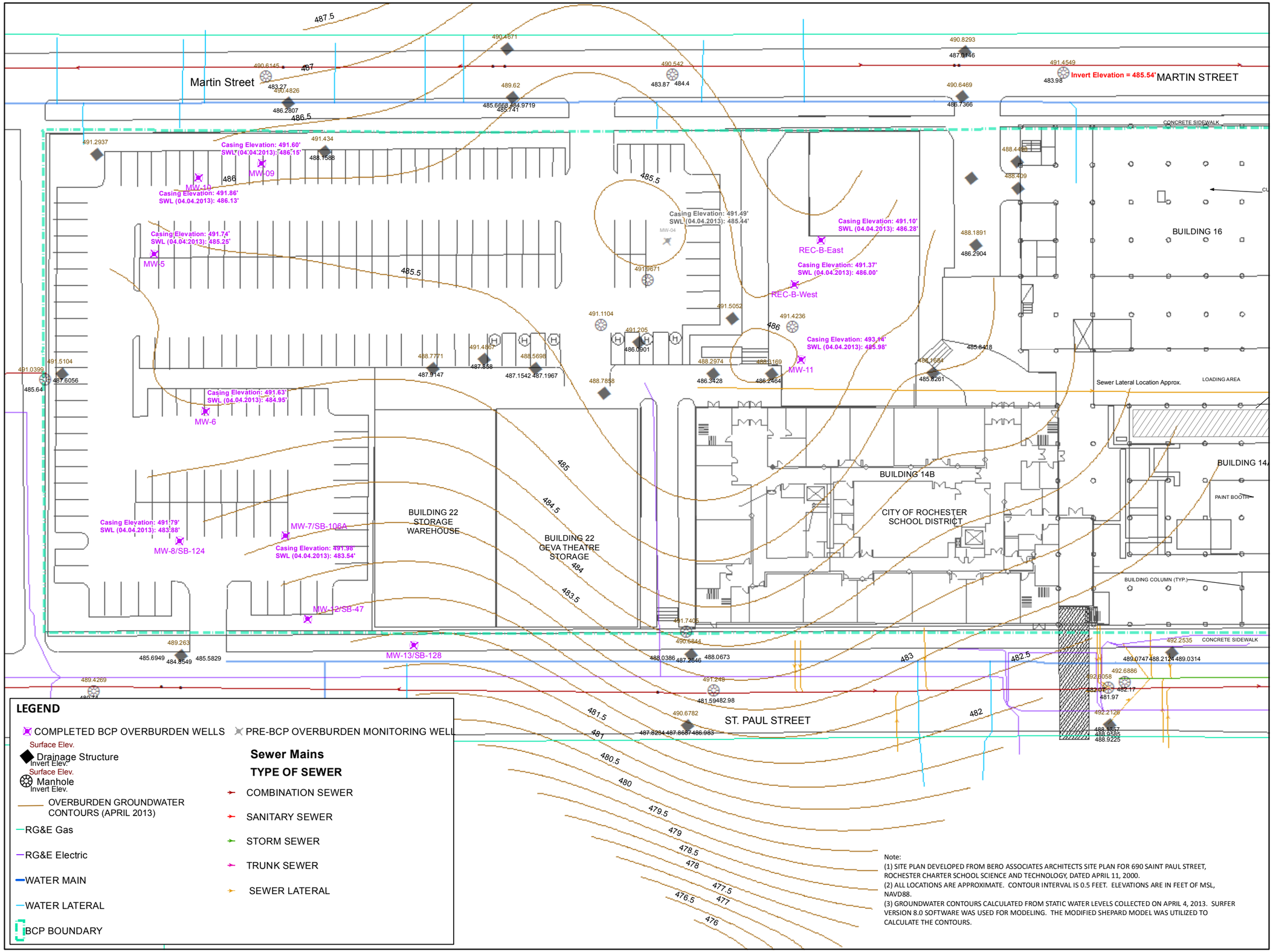

LEGEND

- COMPLETED BCP OVERBURDEN WELLS
- PRE-BCP OVERBURDEN MONITORING WELL
- Drainage Structure (Surface Elev. / Invert Elev.)
- Manhole (Surface Elev. / Invert Elev.)
- OVERBURDEN GROUNDWATER CONTOURS (APRIL 2013)
- RG&E Gas
- RG&E Electric
- WATER MAIN
- WATER LATERAL
- BCP BOUNDARY

Sewer Mains

TYPE OF SEWER

- COMBINATION SEWER
- SANITARY SEWER
- STORM SEWER
- TRUNK SEWER
- SEWER LATERAL

Note:
(1) SITE PLAN DEVELOPED FROM BERO ASSOCIATES ARCHITECTS SITE PLAN FOR 690 SAINT PAUL STREET, ROCHESTER CHARTER SCHOOL SCIENCE AND TECHNOLOGY, DATED APRIL 11, 2000.
(2) ALL LOCATIONS ARE APPROXIMATE. CONTOUR INTERVAL IS 0.5 FEET. ELEVATIONS ARE IN FEET OF MSL, NAVD88.
(3) GROUNDWATER CONTOURS CALCULATED FROM STATIC WATER LEVELS COLLECTED ON APRIL 4, 2013. SURFER VERSION 8.0 SOFTWARE WAS USED FOR MODELING. THE MODIFIED SHEPARD MODEL WAS UTILIZED TO CALCULATE THE CONTOURS.

Path: \\PROJECTS1\ProjectsAM\Genesee Valley Real Estate Co\209280 - 690 St Paul Remedial Invest\Drawings\SMP\Fig 5A - OB GW April 2013.mxd

LABELLA Associates, D.P.C.
300 STATE STREET
ROCHESTER, NY 14614
P: (585) 454-6110
F: (585) 454-3066
www.labellapc.com
COPYRIGHT 2003

OVERBURDEN GROUNDWATER CONTOURS APRIL 2013 (POST AOC #2 IRM EXCAVATION)

SITE MANAGEMENT PLAN

BROWNFIELD CLEANUP PROGRAM

690 SAINT PAUL STREET ROCHESTER, NEW YORK

VOLUNTEER: GENESEE VALLEY REAL ESTATE COMPANY

STATE OF NEW YORK
DANIEL P. NOLL
No. 081696
LICENSED PROFESSIONAL ENGINEER

It is a violation of New York Education Law Article 145 Sec.7209, for any person, unless acting under the direction of a licensed architect, professional engineer, or land surveyor, to alter an item in any way. If an item bearing the seal of an architect, engineer, or land surveyor is altered; the altering architect, engineer, or land surveyor shall affix to the item their seal and notation "altered by" followed by their signature and date of such alteration, and a specific description of the alteration.

N E S W

0 25 50 Feet

1 inch = 50 feet

INTENDED TO PRINT 11" X 17"

DATE; 7/31/2017

209280

FIGURE 5A

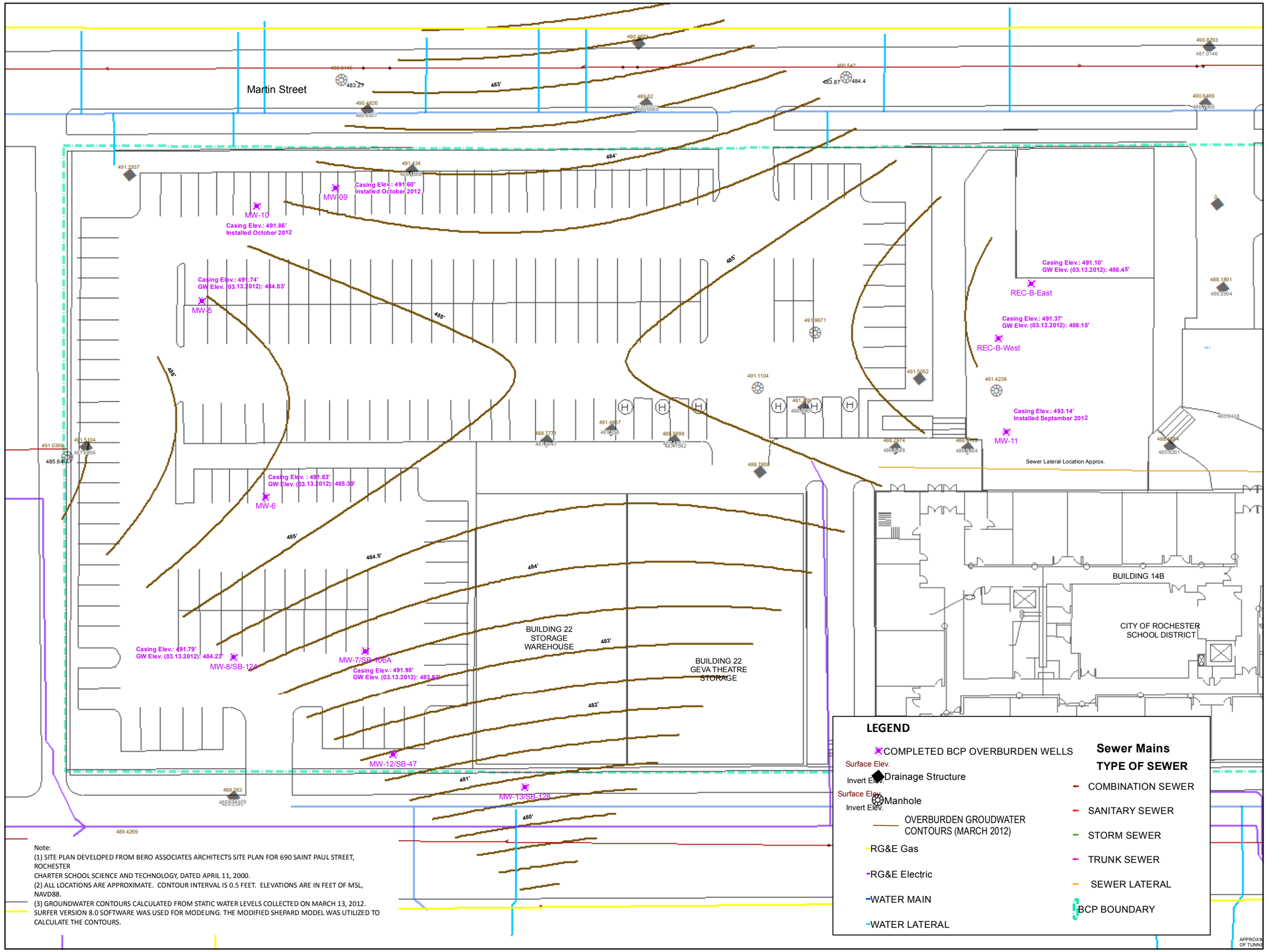

Note:
(1) SITE PLAN DEVELOPED FROM BERO ASSOCIATES ARCHITECTS SITE PLAN FOR 690 SAINT PAUL STREET, ROCHESTER
CHARTER SCHOOL SCIENCE AND TECHNOLOGY, DATED APRIL 11, 2000.
(2) ALL LOCATIONS ARE APPROXIMATE. CONTOUR INTERVAL IS 0.5 FEET. ELEVATIONS ARE IN FEET OF MSL, NAVD88.
(3) GROUNDWATER CONTOURS CALCULATED FROM STATIC WATER LEVELS COLLECTED ON MARCH 13, 2012. SURFER VERSION 8.0 SOFTWARE WAS USED FOR MODELING. THE MODIFIED SHEPARD MODEL WAS UTILIZED TO CALCULATE THE CONTOURS.

Path: \\PROJECTS1\ProjectsAM\Genesee Valley Real Estate Co\209280 - 690 St Paul Remedial Invest\Drawings\SMP\Fig 5B OB GW March 2012.mxd

LABELLA Associates, D.P.C.
300 STATE STREET
ROCHESTER, NY 14614
P: (585) 454-6110
F: (585) 454-3066
www.labellapc.com
COPYRIGHT 2003

OVERBURDEN GROUNDWATER CONTOURS MARCH 2012 (PRE AOC #2 IRM EXCAVATION)

SITE MANAGEMENT PLAN

BROWNFIELD CLEANUP PROGRAM

690 SAINT PAUL STREET
ROCHESTER, NEW YORK

VOLUNTEER:
GENESEE VALLEY
REAL ESTATE COMPANY

STATE OF NEW YORK
DANIEL P. NOLL
No. 081996
LICENSED PROFESSIONAL ENGINEER

It is a violation of New York Education Law Article 145 Sec.7209, for any person, unless acting under the direction of a licensed architect, professional engineer, or land surveyor, to alter an item in any way. If an item bearing the seal of an architect, engineer, or land surveyor is altered; the altering architect, engineer, or land surveyor shall affix to the item their seal and notation "altered by" followed by their signature and date of such alteration, and a specific description of the alteration.

INTENDED TO PRINT 11" X 17"

DATE; 7/31/2017

209280

FIGURE 5B

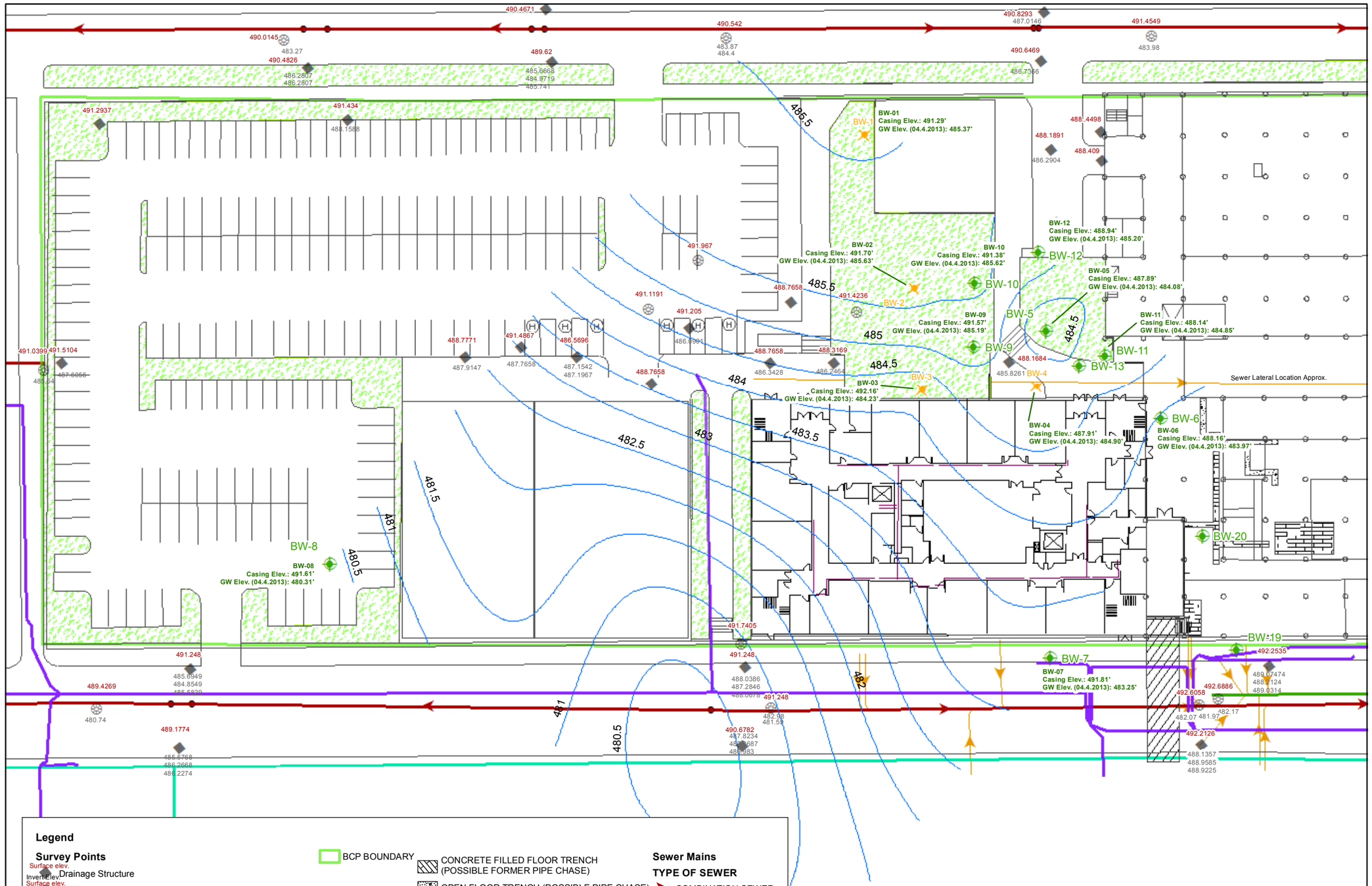

Legend

Survey Points

- Drainage Structure (Surface elev. / Invert Elev.)
- Manhole (Surface elev. / Invert Elev.)
- RG&E Electric
- GROUNDWATER CONTOURS (MODIFIED SHEPARD MODEL)
- COMPLETED BCP BEDROCK WELLS
- COMPLETED PRE-BCP BEDROCK WELLS

- BCP BOUNDARY
- CONCRETE FILLED FLOOR TRENCH (POSSIBLE FORMER PIPE CHASE)
- OPEN FLOOR TRENCH (POSSIBLE PIPE CHASE)
- GRASS COVERED MEDIAN
- STAIRWAY
- RG&E Electric
- RG&E Gas
- Sewer Nodes

Sewer Mains

TYPE OF SEWER

- COMBINATION SEWER
- SANITARY SEWER
- STORM SEWER
- TRUNK SEWER
- SEWER LATERAL

Note:
(1) SITE PLAN DEVELOPED FROM BERO ASSOCIATES ARCHITECTS SITE PLAN FOR 690 SAINT PAUL STREET, ROCHESTER
CHARTER SCHOOL SCIENCE AND TECHNOLOGY, DATED APRIL 11, 2000.
(2) ALL LOCATIONS ARE APPROXIMATE. CONTOUR INTERVAL IS 0.5 FEET. ELEVATIONS ARE IN FEET OF MSL, NAVD88.
(3) GROUNDWATER CONTOURS CALCULATED FROM STATIC WATER LEVELS COLLECTED ON APRIL 4, 2013. THE MODIFIED SHEPARD MODEL WAS UTILIZED TO CALCULATE THE CONTOURS. THE GROUNDWATER ELEVATION OF BW-13 WAS NOT UTILIZED IN THIS MODELING DUE TO THIS WELL'S DEEP SCREEN INTERVAL.

Path: \\PROJECTS1\ProjectsAM\Genesee Valley Real Estate Co\209280 - 690 St Paul Remedial Invest\Drawings\SMP\Fig 5C - Bedrock GW April 2013.mxd

LABELLA Associates, D.P.C.

300 STATE STREET
ROCHESTER, NY 14614
P: (585) 454-6110
F: (585)454-3066
www.labellapc.com
COPYRIGHT 2003

BEDROCK GROUNDWATER CONTOURS APRIL 2013

SITE MANAGEMENT PLAN

BROWNFIELD CLEANUP PROGRAM

690 SAINT PAUL STREET ROCHESTER, NEW YORK

VOLUNTEER: GENESEE VALLEY REAL ESTATE COMPANY

STATE OF NEW YORK
DANIEL P. NOLL
No. 081998
LICENSED PROFESSIONAL ENGINEER

It is a violation of New York Education Law Article 145 Sec.7209, for any person, unless acting under the direction of a licensed architect, professional engineer, or land surveyor, to alter an item in any way. If an item bearing the seal of an architect, engineer, or land surveyor is altered; the altering architect, engineer, or land surveyor shall affix to the item their seal and notation "altered by" followed by their signature and date of such alteration, and a specific description of the alteration.

N E S W

0 25 50 Feet

1 inch = 50 feet

INTENDED TO PRINT 11" X 17"

DATE; 7/31/2017

209280

FIGURE 5C

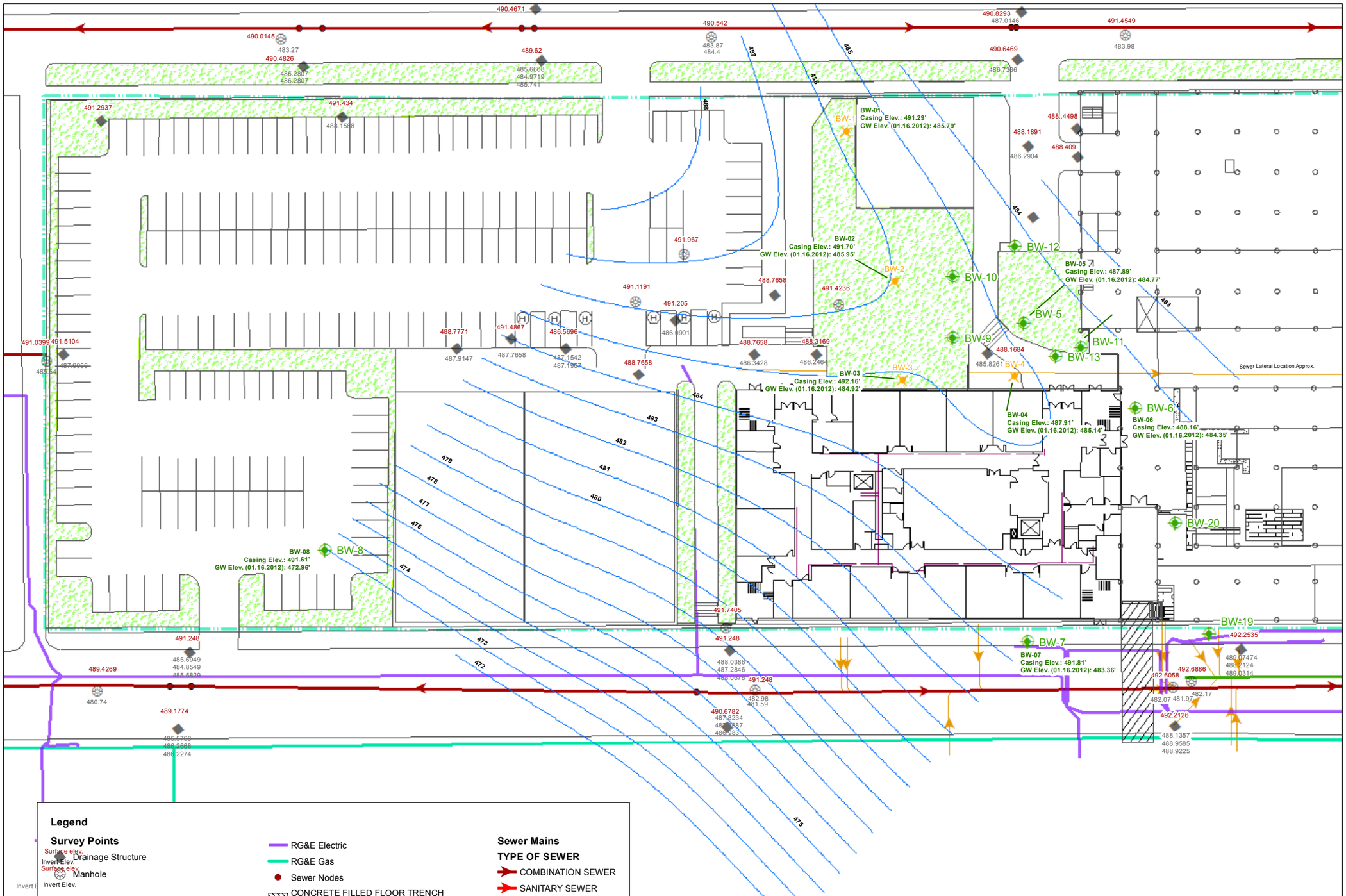

Note:
(1) SITE PLAN DEVELOPED FROM BERO ASSOCIATES ARCHITECTS SITE PLAN FOR 690 SAINT PAUL STREET, ROCHESTER CHARTER SCHOOL SCIENCE AND TECHNOLOGY, DATED APRIL 11, 2000.
(2) ALL LOCATIONS ARE APPROXIMATE. CONTOUR INTERVAL IS 0.5 FEET. ELEVATIONS ARE IN FEET OF MSL, NAVD88.
(3) GROUNDWATER CONTOURS CALCULATED FROM STATIC WATER LEVELS COLLECTED ON JANUARY 16, 2012. THE MODIFIED SHEPARD MODEL WAS UTILIZED TO CALCULATE THE CONTOURS. THE GROUNDWATER ELEVATION OF BW-13 WAS NOT UTILIZED IN THIS MODELING AS THIS WELL HAD NOT YET BEEN INSTALLED. STATIC WATER LEVELS FROM INTERFACE WELLS BW-09 THROUGH BW-12 WERE NOT UTILIZED BECAUSE THESE MEASUREMENTS WOULD MOST LIKELY REPRESENT OVERBURDEN GROUNDWATER (IN ADDITION, THESE WELLS WERE INSTALLED IMMEDIATELY FOLLOWING THE COLLECTION OF THE JANUARY 2012 SWLS).

Path: \\PROJECTS1\ProjectsAM\Genesee Valley Real Estate Co\209280 - 690 St Paul Remedial Invest\Drawings\SMP\Fig 5D - Bedrock GW Jan 2012.mxd

LABELLA Associates, D.P.C.
300 STATE STREET
ROCHESTER, NY 14614
P: (585) 454-6110
F: (585)454-3066
www.labellapc.com
COPYRIGHT 2003

BEDROCK GROUNDWATER CONTOURS JANUARY 2012

SITE MANAGEMENT PLAN

BROWNFIELD CLEANUP PROGRAM

690 SAINT PAUL STREET ROCHESTER, NEW YORK

VOLUNTEER: GENESEE VALLEY REAL ESTATE COMPANY

STATE OF NEW YORK
DANIEL P. NOLL
No. 091996
LICENSED PROFESSIONAL ENGINEER

It is a violation of New York Education Law Article 145 Sec.7209, for any person, unless acting under the direction of a licensed architect, professional engineer, or land surveyor, to alter an item in any way. If an item bearing the seal of an architect, engineer, or land surveyor is altered; the altering architect, engineer, or land surveyor shall affix to the item their seal and notation "altered by" followed by their signature and date of such alteration, and a specific description of the alteration.

0 25 50 Feet

1 inch = 50 feet

INTENDED TO PRINT 11" X 17"

DATE; 7/31/2017

209280

FIGURE 5D

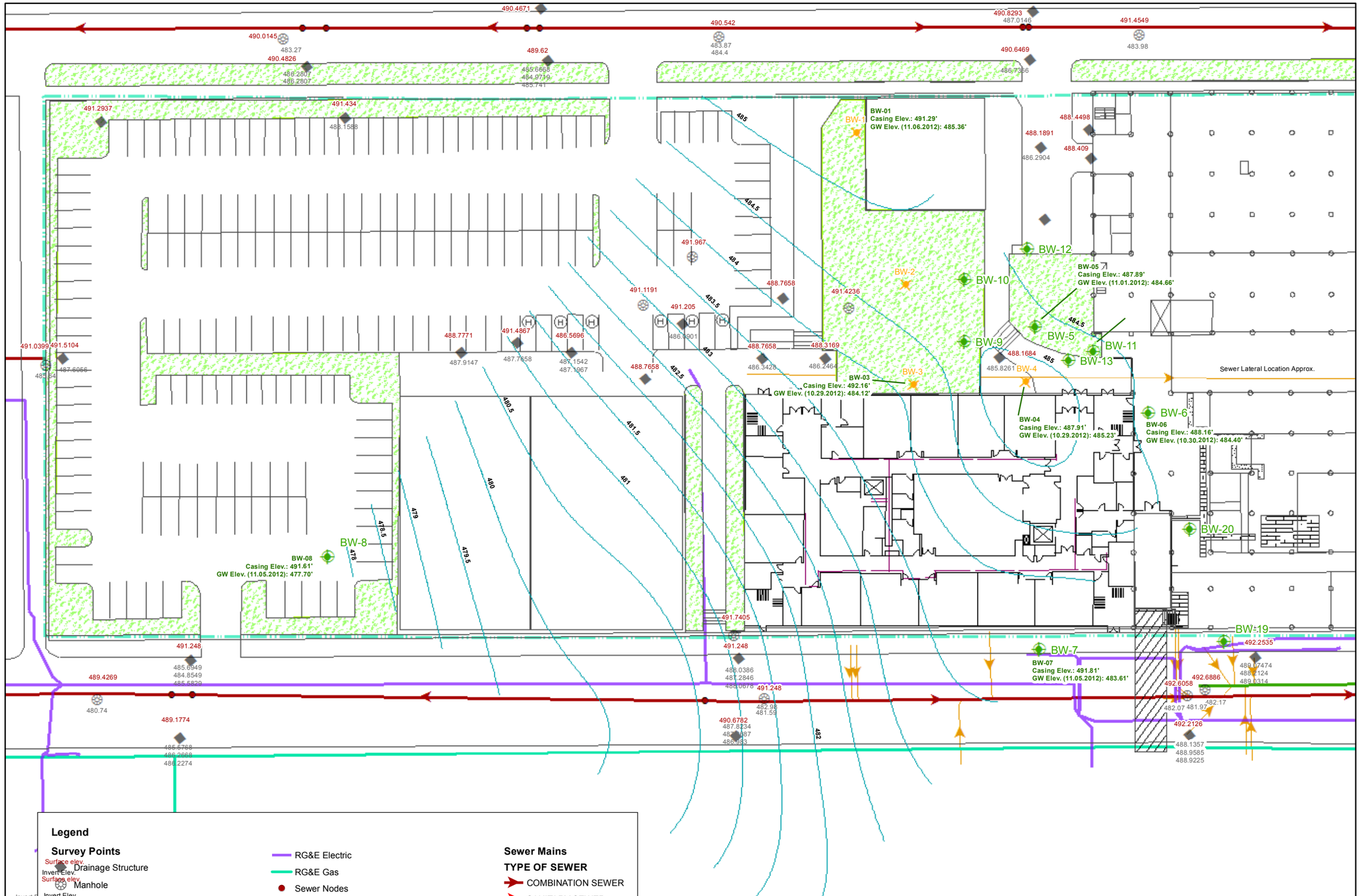

Note:
(1) SITE PLAN DEVELOPED FROM BERO ASSOCIATES ARCHITECTS SITE PLAN FOR 690 SAINT PAUL STREET, ROCHESTER CHARTER SCHOOL SCIENCE AND TECHNOLOGY, DATED APRIL 11, 2000.
(2) ALL LOCATIONS ARE APPROXIMATE. CONTOUR INTERVAL IS 0.5 FEET. ELEVATIONS ARE IN FEET OF MSL, NAVD88.
(3) GROUNDWATER CONTOURS CALCULATED FROM STATIC WATER LEVELS COLLECTED DURING SAMPLING (PRIOR TO PURGING) BETWEEN OCTOBER 29 AND NOVEMBER 6, 2012. THE MODIFIED SHEPARD MODEL WAS UTILIZED TO CALCULATE THE CONTOURS. THE GROUNDWATER ELEVATION OF BW-13 WAS NOT UTILIZED IN THIS MODELING AS THIS WELL IS SCREENED AT A SIGNFICANTLY DEEPER DEPTH INTERVAL THAN THE OTHER WELLS. STATIC WATER LEVELS FROM INTERFACE WELLS BW-09 THROUGH BW-12 WERE NOT UTILIZED BECAUSE THESE MEASUREMENTS WOULD MOST LIKELY REPRESENT OVERBURDEN GROUNDWATER. AS NOTED IN THE RIR, BW-02 WAS NOT ABLE TO BE SAMPLED UNTIL JANUARY 2013 AS PART OF THIS SAMPLING ROUND AND THUS THIS SWL WAS NOT USED IN MODELING.

Path: \\PROJECTS1\ProjectsAM\Genesee Valley Real Estate Co\209280 - 690 St Paul Remedial Invest\Drawings\SMP\Fig 5E - Bedrock GW Oct&Nov 2012.mxd

LABELLA Associates, D.P.C.
300 STATE STREET
ROCHESTER, NY 14614
P: (585) 454-6110
F: (585) 454-3066
www.labellapc.com
COPYRIGHT 2013

BEDROCK GROUNDWATER CONTOURS OCTOBER/NOVEMBER 2012

SITE MANAGEMENT PLAN

BROWNFIELD CLEANUP PROGRAM

690 SAINT PAUL STREET ROCHESTER, NEW YORK

VOLUNTEER: GENESEE VALLEY REAL ESTATE COMPANY

STATE OF NEW YORK
DANIEL P. NOLL
No. 081936
LICENSED PROFESSIONAL ENGINEER

It is a violation of New York Education Law Article 145 Sec.7209, for any person, unless acting under the direction of a licensed architect, professional engineer, or land surveyor, to alter an item in any way. If an item bearing the seal of an architect, engineer, or land surveyor is altered; the altering architect, engineer, or land surveyor shall affix to the item their seal and notation "altered by" followed by their signature and date of such alteration, and a specific description of the alteration.

N E S W

0 25 50 Feet

1 inch = 50 feet

INTENDED TO PRINT 11" X 17"

DATE; 7/31/2017

209280

FIGURE 5E

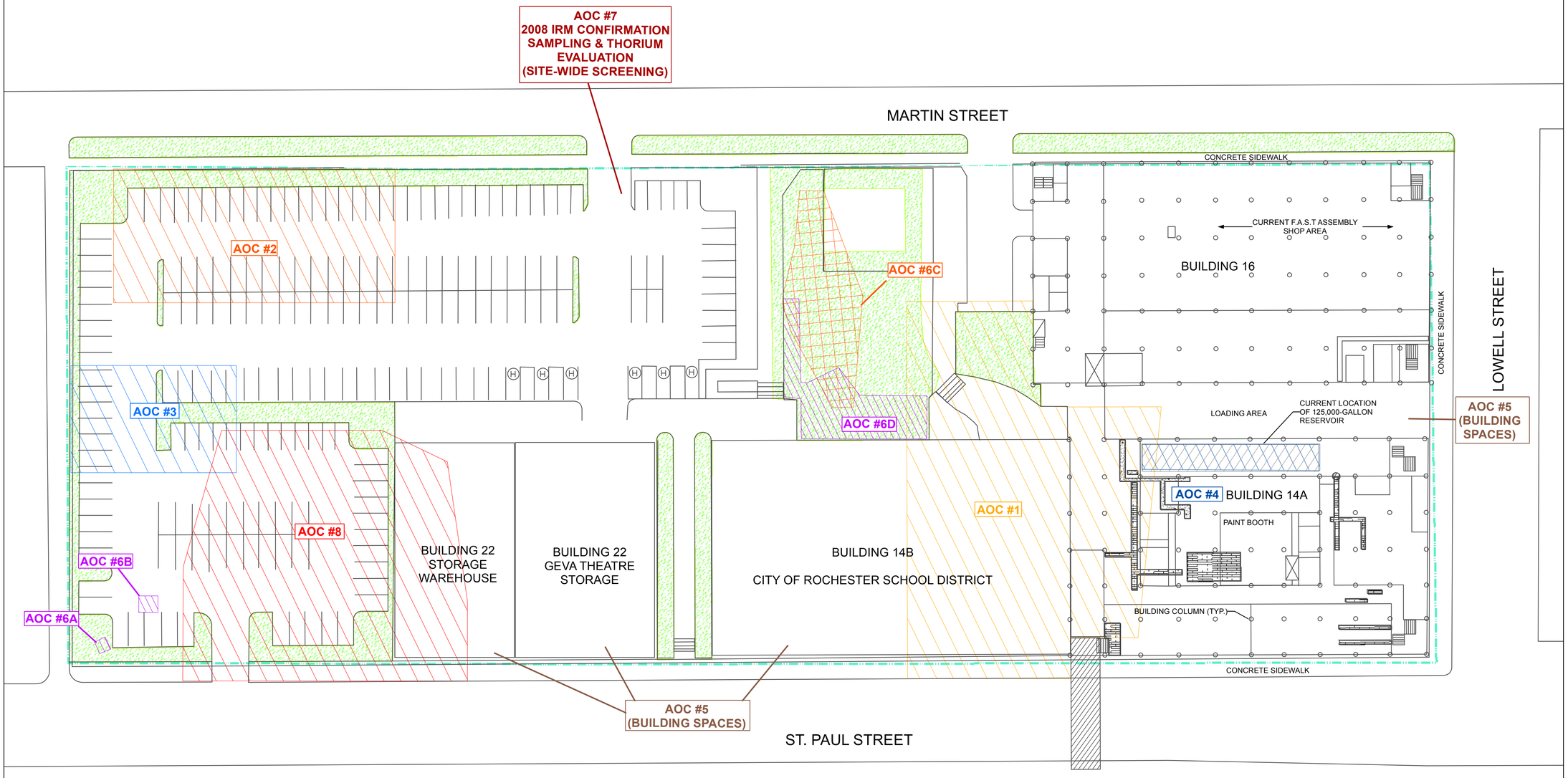

LEGEND

- CONCRETE FILLED FLOOR TRENCH (POSSIBLE FORMER PIPE CHASE)
- OPEN FLOOR TRENCH (POSSIBLE PIPE CHASE)
- GRASS COVERED MEDIAN
- STAIRWAY
- BCP BOUNDARY

Note:
(1) SITE PLAN DEVELOPED FROM BERO ASSOCIATES ARCHITECTS SITE PLAN FOR 690 SAINT PAUL STREET, ROCHESTER CHARTER SCHOOL SCIENCE AND TECHNOLOGY, DATED APRIL 11, 2000. LOCATIONS OF VEGETATED AREAS, CONCRETE, ETC. ARE CONSIDERED APPROXIMATE.

LABELLA Associates, D.P.C.
ENGINEERS | PLANNERS | SCIENTISTS
ROCHESTER, NY 14614
P: (585) 454-6110
F: (585)454-3066
www.labellapc.com
COPYRIGHT 2003

Area of Concern (AOC) Locations

SITE MANAGEMENT PLAN

BROWNFIELD CLEANUP PROGRAM

690 SAINT PAUL STREET ROCHESTER, NEW YORK

VOLUNTEER: GENESEE VALLEY REAL ESTATE COMPANY



It is a violation of New York Education Law Article 145 Sec.7209, for any person, unless acting under the direction of a licensed architect, professional engineer, or land surveyor, to alter an item in any way. If an item bearing the seal of an architect, engineer, or land surveyor is altered; the altering architect, engineer, or land surveyor shall affix to the item their seal and notation "altered by" followed by their signature and date of such alteration, and a specific description of the alteration.



0 30 60 Feet

1 inch = 30 feet

INTENDED TO PRINT ANSI D

DATE; 7/31/2017

209280

FIGURE 6

Path: \\PROJECTS1\ProjectsAM\Genesee Valley Real Estate Co\209280 - 690 St Paul Remedial Invest\Drawings\SMP\Fig 6 - AOC Locs.mxd

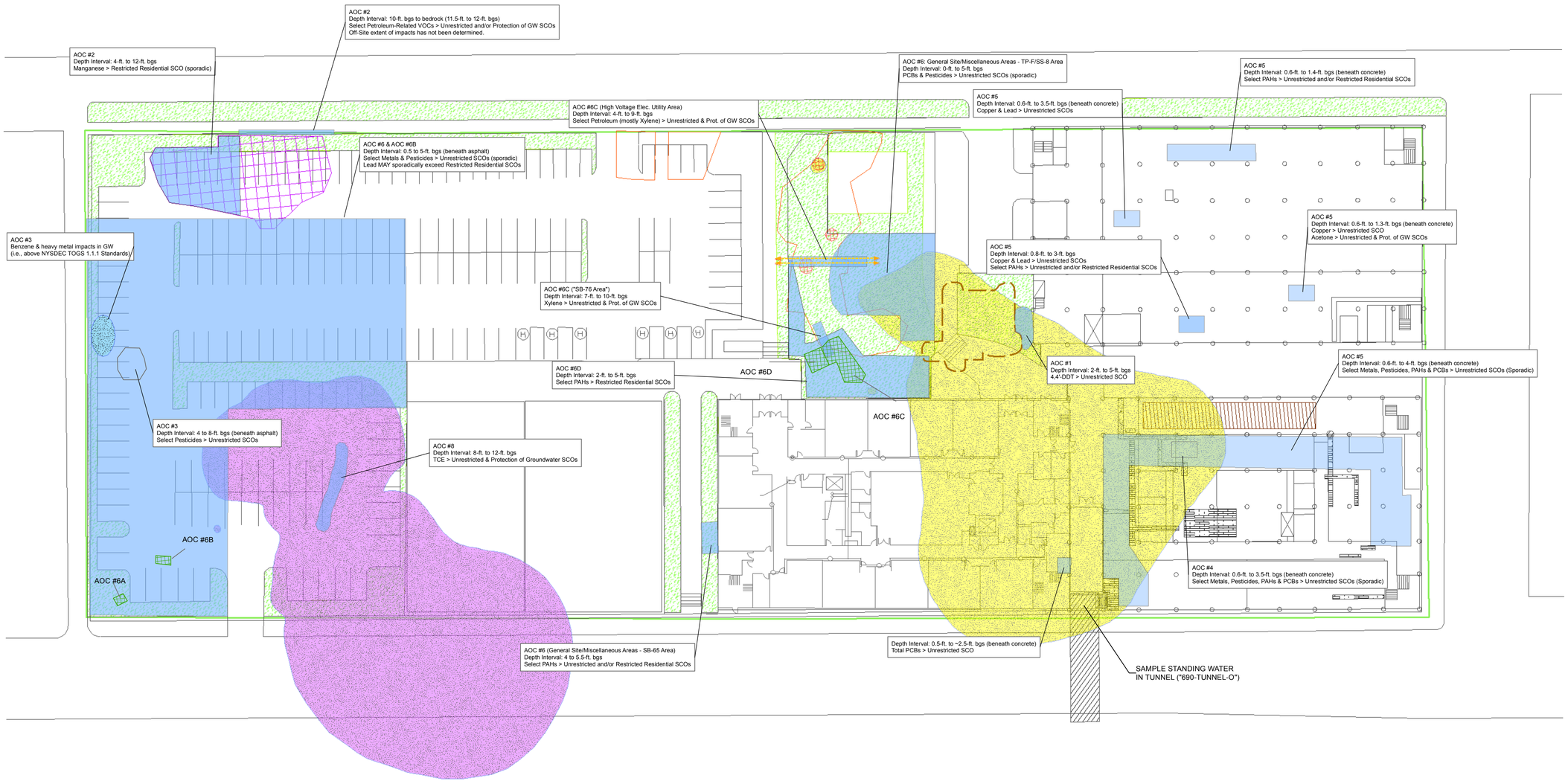

LEGEND

- GENERAL AREA OF HIGH VOLTAGE ELEC. LINES
- AOC#6 2012 EXCAVATION EXTENTS
- APPROXIMATE GROUNDWATER IMPACTS (AOC #3)
- AOC #2 2012 EXCAVATION EXTENT
- APPROXIMATE GROUNDWATER IMPACTS (AOC #8 - 5 PPB AND HIGHER)
- AOC #1 2011 EXCAVATION AREA (APPROXIMATE)
- INFERRED AOC #6C LNAPL LIMITS
- SOIL EXCAVATION - SEPTEMBER 2008 (ACTUAL LIMITS VARY)
- APPROXIMATE GROUNDWATER IMPACTS (AOC #1 - 5 PPB AND HIGHER)
- TUNNEL
- BCP BOUNDARY

Site Plan

- CONCRETE FILLED FLOOR TRENCH (POSSIBLE FORMER PIPE CHASE)
- OPEN FLOOR TRENCH (POSSIBLE PIPE CHASE)
- GRASS COVERED MEDIAN
- STAIRWAY

Notes:
(1) SITE PLAN DEVELOPED FROM BERO ASSOCIATES ARCHITECTS SITE PLAN FOR 690 SAINT PAUL STREET, ROCHESTER CHARTER SCHOOL SCIENCE AND TECHNOLOGY, DATED APRIL 11, 2000.
(2) ALL COC CONCENTRATIONS ARE BELOW PART 375 RESTRICTED RESIDENTIAL SCOS UNLESS OTHERWISE NOTED.
(3) THE EXTENTS OF EXCEEDANCES SHOWN ARE BASED ON AVAILABLE DATA.
(4) SEPTEMBER 2008 IRM EXCAVATION LIMITS ARE APPROXIMATE. THESE LOCATIONS WERE ORIGINALLY DETERMINED USING A TRIMBLE GEOEXPLORER 2008 SERIES GEOGRAPHIC POSITIONING SYSTEM (GPS) PRIOR TO ACCEPTANCE OF THE SITE INTO THE NYSDEC BCP. DISCREPENCIES BETWEEN THE ACTUAL REMEDIAL EXTENT AND THAT SHOWN APPEAR TO BE DUE TO THE CLOSE PROXIMITY OF THE 6- AND 8-STOREY BUILDINGS CAUSING SLIGHT INTERFERENCE BETWEEN THE GPS DEVICE AND SATELLITES.
(5) KIRGING GROUNDWATER MODELING COMPLETED USING GOLDEN SOFTWARE SURFER 8.0 AND ARE PARTIALLY INTERPRETED.

Path: \\PROJECTS1\ProjectsAM\Genesee Valley Real Estate Co\209280 - 690 St Paul Remedial Invest\Drawings\SMP\Fig 7 - Remaining Contamination.mxd

LABELLA Associates, D.P.C.
300 STATE STREET
ROCHESTER, NY 14614
P: (585) 454-6110
F: (585)454-3066
www.labellapc.com
COPYRIGHT 2003

SUMMARY OF REMAINING SOIL AND GROUNDWATER CONTAMINATION

SITE MANAGEMENT PLAN

BROWNFIELD CLEANUP PROGRAM

690 SAINT PAUL STREET ROCHESTER, NEW YORK

VOLUNTEER: GENESEE VALLEY REAL ESTATE COMPANY

STATE OF NEW YORK
DANIEL R. ROLL
No. 081588
LICENSED PROFESSIONAL ENGINEER

It is a violation of New York Education Law Article 145 Sec.7209, for any person, unless acting under the direction of a licensed architect, professional engineer, or land surveyor, to alter an item in any way. If an item bearing the seal of an architect, engineer, or land surveyor is altered; the altering architect, engineer, or land surveyor shall affix to the item their seal and notation "altered by" followed by their signature and date of such alteration, and a specific description of the alteration.

N E W S

0 15 30 60 Feet

1 inch = 30 feet

INTENDED TO PRINT ANSI D

DATE; 7/31/2017

209280

FIGURE 7

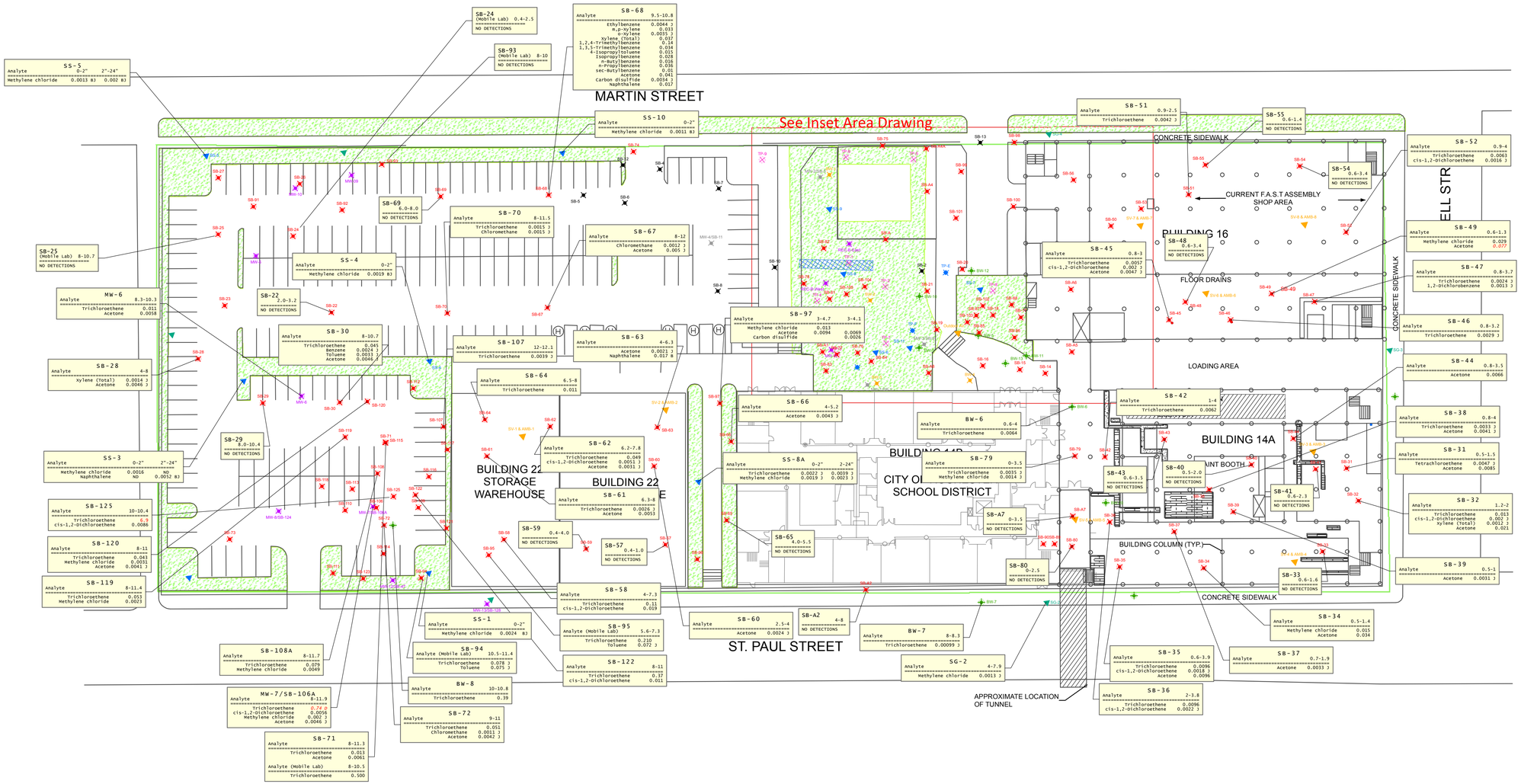
SS-5
Analyte 0-2" 2"-24"
Methylene chloride 0.0013 BJ 0.002 BJ
SB-24
(Mobile Lab) 0.4-2.5
NO DETECTIONS
SB-93
(Mobile Lab) 8-10
NO DETECTIONS
SB-68
Analyte 9.5-10.8
Ethylbenzene 0.0044 J
m,p-Xylene 0.031
o-Xylene 0.0035 J
Xylene (Total) 0.037
1,2,4-Trimethylbenzene 0.14
1,3,5-Trimethylbenzene 0.034
4-Isopropyltoluene 0.015
Isopropylbenzene 0.016
n-Butylbenzene 0.036
n-Propylbenzene 0.036
sec-Butylbenzene 0.01
Acetone 0.041
Carbon disulfide 0.0034 J
Naphthalene 0.017
MARTIN STREET
SS-10
Analyte 0-2"
Methylene chloride 0.0011 BJ
See Inset Area Drawing
SB-51
Analyte 0.9-2.5
Trichloroethene 0.0042 J
SB-55
0.6-1.4
NO DETECTIONS
CONCRETE SIDEWALK
SB-52
Analyte 0.9-4
Trichloroethene 0.0063
cis-1,2-Dichloroethene 0.0016 J
SB-54
0.6-3.4
NO DETECTIONS
CURRENT F.A.S.T ASSEMBLY SHOP AREA
BUILDING 16
SB-48
0.6-3.4
NO DETECTIONS
SB-45
Analyte 0.8-3
Trichloroethene 0.0057
cis-1,2-Dichloroethene 0.002 J
Acetone 0.0047 J
FLOOR DRAINS
SB-49
Analyte 0.6-1.3
Methylene chloride 0.029
Acetone 0.077
SB-47
Analyte 0.8-3.7
Trichloroethene 0.0024 J
1,2-Dichlorobenzene 0.0013 J
CONCRETE SIDEWALK
SB-46
Analyte 0.8-3.2
Trichloroethene 0.0029 J
SB-44
Analyte 0.8-3.5
Acetone 0.0066
LOADING AREA
SB-42
Analyte 1-4
Trichloroethene 0.0062
BUILDING 14A
SB-38
Analyte 0.8-4
Trichloroethene 0.0033 J
Acetone 0.0041 J
SB-31
Analyte 0.5-1.5
Tetrachloroethene 0.0047 J
Acetone 0.0085
SB-32
Analyte 1.2-2
Trichloroethene 0.013
cis-1,2-Dichloroethene 0.002 J
Xylene (Total) 0.0012 J
Acetone 0.021
SB-39
Analyte 0.5-1
Acetone 0.0031 J
SB-43
0.6-1.1
NO DETECTIONS
SB-40
0.5-2.0
NO DETECTIONS
SB-41
0.6-2.3
NO DETECTIONS
BUILDING COLUMN (TYP.)
SB-33
0.6-1.6
NO DETECTIONS
CONCRETE SIDEWALK
SB-34
Analyte 0.5-1.4
Methylene chloride 0.015
Acetone 0.034
SB-35
Analyte 0.6-3.9
Trichloroethene 0.0096
cis-1,2-Dichloroethene 0.0018 J
Acetone 0.0096
SB-37
Analyte 0.7-1.9
Acetone 0.0033 J
SB-36
Analyte 2-3.8
Trichloroethene 0.0096
cis-1,2-Dichloroethene 0.0022 J
SB-25
(Mobile Lab) 8-10.7
NO DETECTIONS
SS-4
Analyte 0-2"
Methylene chloride 0.0019 BJ
MW-6
Analyte 8.3-10.3
Trichloroethene 0.011
Acetone 0.0058
SB-22
2.0-3.2
NO DETECTIONS
SB-30
Analyte 8-10.7
Trichloroethene 0.045
Benzene 0.0024 J
Toluene 0.0027 J
Acetone 0.0046 J
SB-28
Analyte 4-8
Xylene (Total) 0.0014 J
Acetone 0.0046 J
SB-29
8.0-10.4
NO DETECTIONS
SS-3
Analyte 0-2" 2"-24"
Methylene chloride 0.0016 ND
Naphthalene ND 0.0052 BJ
SB-125
Analyte 10-10.4
Trichloroethene 0.5
cis-1,2-Dichloroethene 0.0086
SB-120
Analyte 8-11
Trichloroethene 0.043
Methylene chloride 0.0031
Acetone 0.0041 J
SB-119
Analyte 8-11.4
Trichloroethene 0.053
Methylene chloride 0.0023
SB-107
Analyte 12-12.1
Trichloroethene 0.0039 J
SB-63
Analyte 4-6.3
Acetone 0.0021 J
Naphthalene 0.017 B
SB-64
Analyte 6.5-8
Trichloroethene 0.011
SB-62
Analyte 6.2-7.8
Trichloroethene 0.049
cis-1,2-Dichloroethene 0.0011 J
Acetone 0.0031 J
BUILDING 22 STORAGE WAREHOUSE
BUILDING 22
SB-61
Analyte 6.3-8
Trichloroethene 0.0026 J
Acetone 0.0053
SB-59
0.4-4.0
NO DETECTIONS
SB-57
0.4-1.0
NO DETECTIONS
SB-58
Analyte 4-7.3
Trichloroethene 0.11
cis-1,2-Dichloroethene 0.019
SB-95
Analyte (Mobile Lab) 5.6-7.3
Trichloroethene 0.210
Toluene 0.072 J
SB-122
Analyte 8-11
Trichloroethene 0.37
cis-1,2-Dichloroethene 0.011
SS-1
Analyte 0-2"
Methylene chloride 0.0024 BJ
SB-94
Analyte (Mobile Lab) 10.5-11.4
Trichloroethene 0.078 J
Toluene 0.075 J
SB-108A
Analyte 8-11.7
Trichloroethene 0.079
Methylene chloride 0.0049
MW-7/SB-106A
Analyte 8-11.9
Trichloroethene 0.74 D
cis-1,2-Dichloroethene 0.0056
Methylene chloride 0.002 J
Acetone 0.0046 J
BW-8
Analyte 10-10.8
Trichloroethene 0.39
SB-72
Analyte 9-11
Trichloroethene 0.051
Chloromethane 0.0011 J
Acetone 0.0042 J
SB-71
Analyte 8-11.3
Trichloroethene 0.011
Acetone 0.0061
Analyte (Mobile Lab) 8-10.5
Trichloroethene 0.500
SB-97
Analyte 3-4.7 3-4.1
Methylene chloride 0.013
Acetone 0.0094 0.0069
Carbon disulfide 0.0026
SB-66
Analyte 4-5.2
Acetone 0.0043 J
SS-8A
Analyte 0-2" 2-24"
Trichloroethene 0.0022 J 0.0039 J
Methylene chloride 0.0019 J 0.0023 J
SB-65
4.0-5.5
NO DETECTIONS
SB-60
Analyte 2.5-4
Acetone 0.0024 J
ST. PAUL STREET
SB-A2
4-8
NO DETECTIONS
BW-7
Analyte 8-8.3
Trichloroethene 0.00099 J
SG-2
Analyte 4-7.9
Methylene chloride 0.0013 J
APPROXIMATE LOCATION OF TUNNEL
BW-6
Analyte 0.6-4
Trichloroethene 0.0064
SB-79
Analyte 0-3.5
Trichloroethene 0.0035 J
Methylene chloride 0.0014 J
SB-A7
0-3.5
NO DETECTIONS
SB-80
0-2.5
NO DETECTIONS
CITY OF SCHOOL DISTRICT
ELL STR
SB-A8
SB-A9
SB-A10
SB-A11
SB-A12
SB-A13
SB-A14
SB-A15
SB-A16
SB-A17
SB-A18
SB-A19
SB-A20
SB-A21
SB-A22
SB-A23
SB-A24
SB-A25
SB-A26
SB-A27
SB-A28
SB-A29
SB-A30
SB-A31
SB-A32
SB-A33
SB-A34
SB-A35
SB-A36
SB-A37
SB-A38
SB-A39
SB-A40
SB-A41
SB-A42
SB-A43
SB-A44
SB-A45
SB-A46
SB-A47

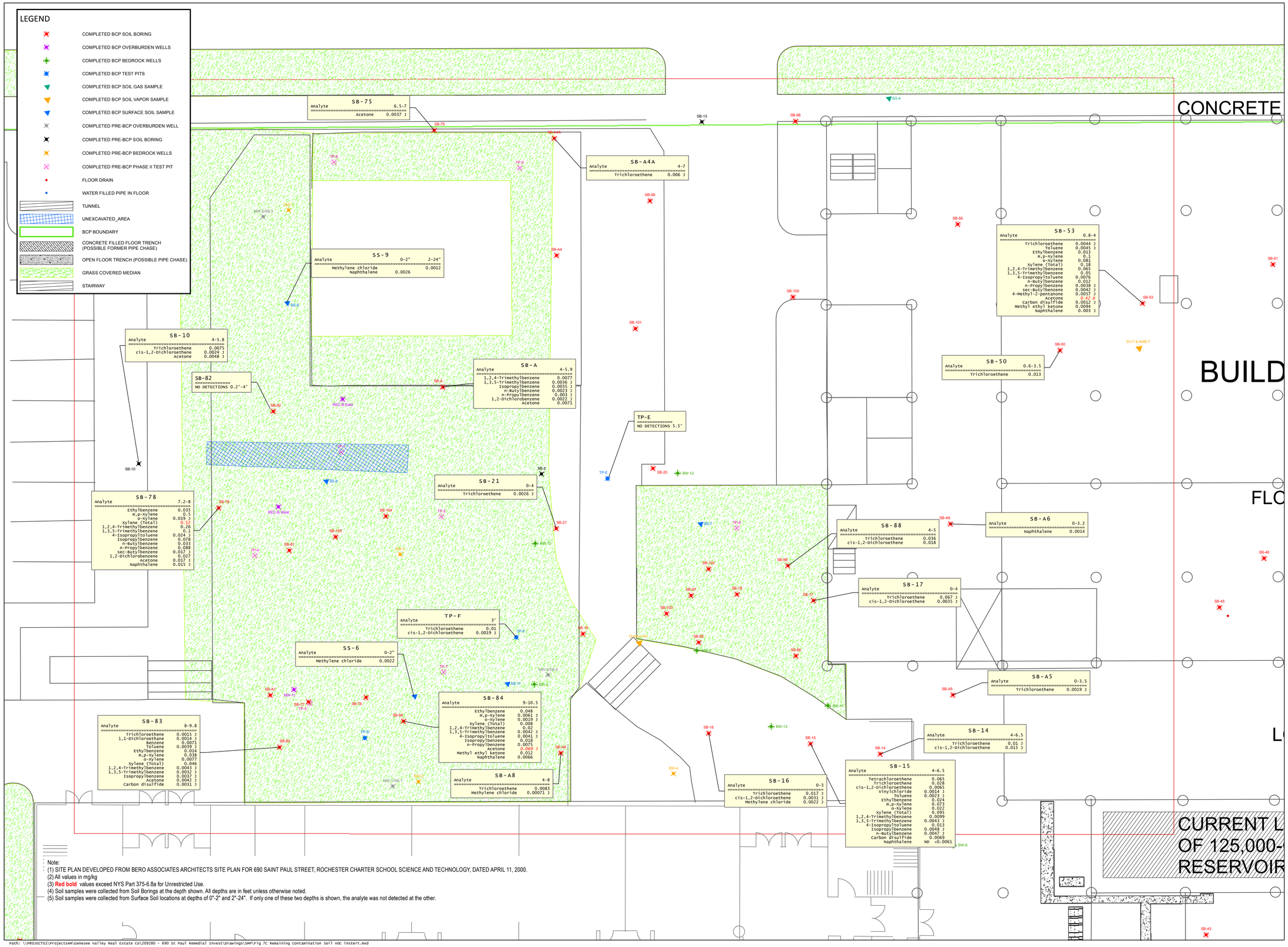
LEGEND
COMPLETED BCP SOIL BORING
COMPLETED BCP OVERBURDEN WELLS
COMPLETED BCP BEDROCK WELLS
COMPLETED BCP TEST PITS
COMPLETED BCP SOIL GAS SAMPLE
COMPLETED BCP SOIL VAPOR SAMPLE
COMPLETED BCP SURFACE SOIL SAMPLE
COMPLETED PRE-BCP OVERBURDEN WELL
COMPLETED PRE-BCP SOIL BORING
COMPLETED PRE-BCP BEDROCK WELLS
COMPLETED PRE-BCP PHASE II TEST PIT
FLOOR DRAIN
WATER FILLED PIPE IN FLOOR
TUNNEL
UNEXCAVATED_AREA
BCP BOUNDARY
CONCRETE FILLED FLOOR TRENCH (POSSIBLE FORMER PIPE CHASE)
OPEN FLOOR TRENCH (POSSIBLE PIPE CHASE)
GRASS COVERED MEDIAN
STAIRWAY
CONCRETE
BUILD
FLO
L
CURRENT L
OF 125,000-
RESERVOIR
SB-75
Analyte 6.5-7
Acetone 0.0037 J
SB-A4A
Analyte 4-7
Trichloroethene 0.006 J
SS-9
Analyte 0-2" 2-24"
Methylene chloride 0.0012
Naphthalene 0.0026
SB-10
Analyte 4-5.8
Trichloroethene 0.0075
cis-1,2-Dichloroethene 0.0024 J
Acetone 0.0048 J
SB-82
NO DETECTIONS 0.2'-4'
SB-A
Analyte 4-5.9
1,2,4-Trimethylbenzene 0.0077
1,3,5-Trimethylbenzene 0.0036 J
Isopropylbenzene 0.0035 J
n-Butylbenzene 0.0023 J
n-Propylbenzene 0.003 J
1,2-Dichlorobenzene 0.0022 J
Acetone 0.0071
TP-E
NO DETECTIONS 5.5'
SB-78
Analyte 7.2-8
Ethylbenzene 0.035
m,p-Xylene 0.5
o-Xylene 0.019 J
Xylene (Total) 0.52
1,2,4-Trimethylbenzene 0.26
1,3,5-Trimethylbenzene 0.1
4-Isopropyltoluene 0.024 J
Isopropylbenzene 0.078
n-Butylbenzene 0.033
n-Propylbenzene 0.088
sec-Butylbenzene 0.017 J
1,2-Dichlorobenzene 0.027
Acetone 0.017 J
Naphthalene 0.015 J
SB-21
Analyte 0-4
Trichloroethene 0.0026 J
TP-F
Analyte 3'
Trichloroethene 0.01
cis-1,2-Dichloroethene 0.0019 J
SS-6
Analyte 0-2"
Methylene chloride 0.0022
SB-84
Analyte 9-10.5
Ethylbenzene 0.048
m,p-Xylene 0.0061 J
o-Xylene 0.0019 J
Xylene (Total) 0.008
1,2,4-Trimethylbenzene 0.02
1,3,5-Trimethylbenzene 0.0042 J
4-Isopropyltoluene 0.0041 J
Isopropylbenzene 0.018
n-Propylbenzene 0.0075
Acetone 0.069 J
Methyl ethyl ketone 0.012
Naphthalene 0.0066
SB-A8
Analyte 4-8
Trichloroethene 0.0083
Methylene chloride 0.00071 J
SB-83
Analyte 8-9.8
Trichloroethene 0.0015 J
1,1-Dichloroethene 0.0014 J
Benzene 0.0071
Toluene 0.0039 J
Ethylbenzene 0.014
m,p-Xylene 0.038
o-Xylene 0.0077
Xylene (Total) 0.046
1,2,4-Trimethylbenzene 0.0043 J
1,3,5-Trimethylbenzene 0.0032 J
Isopropylbenzene 0.0037 J
Acetone 0.0042 J
Carbon disulfide 0.0031 J
SB-88
Analyte 4-5
Trichloroethene 0.036
cis-1,2-Dichloroethene 0.018
SB-A6
Analyte 0-3.2
Naphthalene 0.0014
SB-17
Analyte 0-4
Trichloroethene 0.067 J
cis-1,2-Dichloroethene 0.0035 J
SB-A5
Analyte 0-3.5
Trichloroethene 0.0019 J
SB-53
Analyte 0.8-4
Trichloroethene 0.0044 J
Toluene 0.0045 J
Ethylbenzene 0.013
m,p-Xylene 0.1
o-Xylene 0.081
Xylene (Total) 0.18
1,2,4-Trimethylbenzene 0.065
1,3,5-Trimethylbenzene 0.05
4-Isopropyltoluene 0.0076
n-Butylbenzene 0.012
n-Propylbenzene 0.0038 J
sec-Butylbenzene 0.0042 J
4-Methyl-2-pentanone 0.0057 J
Acetone 0.42 J
Carbon disulfide 0.0012 J
Methyl ethyl ketone 0.0094
Naphthalene 0.003 J
SB-50
Analyte 0.6-3.5
Trichloroethene 0.013
SB-14
Analyte 4-6.5
Trichloroethene 0.01 J
cis-1,2-Dichloroethene 0.015 J
SB-15
Analyte 4-6.5
Tetrachloroethene 0.065
Trichloroethene 0.028
cis-1,2-Dichloroethene 0.0065
Vinylchloride 0.0014 J
Toluene 0.0023 J
Ethylbenzene 0.024
m,p-Xylene 0.073
o-Xylene 0.022
Xylene (Total) 0.095
1,2,4-Trimethylbenzene 0.0099
1,3,5-Trimethylbenzene 0.0043 J
4-Isopropyltoluene 0.013
Isopropylbenzene 0.0048 J
n-Butylbenzene 0.0047 J
Carbon disulfide 0.0069
Naphthalene ND <0.0061
SB-16
Analyte 0-3
Trichloroethene 0.017 J
cis-1,2-Dichloroethene 0.0031 J
Methylene chloride 0.0022 J
SB-13
SB-68
SG-4
SB-99
SB-A4
SB-56
SB-51
SB-100
SB-53
SB-101
SB-50
SV-7 & AMB-7
SB-A
SB-2
SB-9
SB-21
BW-10
SB-78
BEG B-West
SB-104
TP-3
SB-105
SB-81
TP-4
SW-1
SB-1
SB-A1
MW-1
SB-77
TP-1
SB-76
SB-84
TP-D
SB-83
SB-82
SB-A7
SB-A6
SB-102
SB-48
SB-17
SB-45
SB-10
SB-85
SB-A5
SB-16
SB-15
SB-14
BW-13
BW-4
SB-43
BW-6
SB-20
BW-12
TP-E
BW-11
SB-A2
SB-A3
SB-A4
SB-A5
SB-A6
SB-A7
SB-A8
SB-1
SB-2
SB-3
SB-4
SB-5
SB-6
SB-7
SB-8
SB-9
SB-10
SB-11
SB-12
SB-13
SB-14
SB-15
SB-16
SB-17
SB-18
SB-19
SB-20
SB-21
SB-22
SB-23
SB-24
SB-25
SB-26
SB-27
SB-28
SB-29
SB-30
SB-31
SB-32
SB-33
SB-34
SB-35
SB-36
SB-37
SB-38
SB-39
SB-40

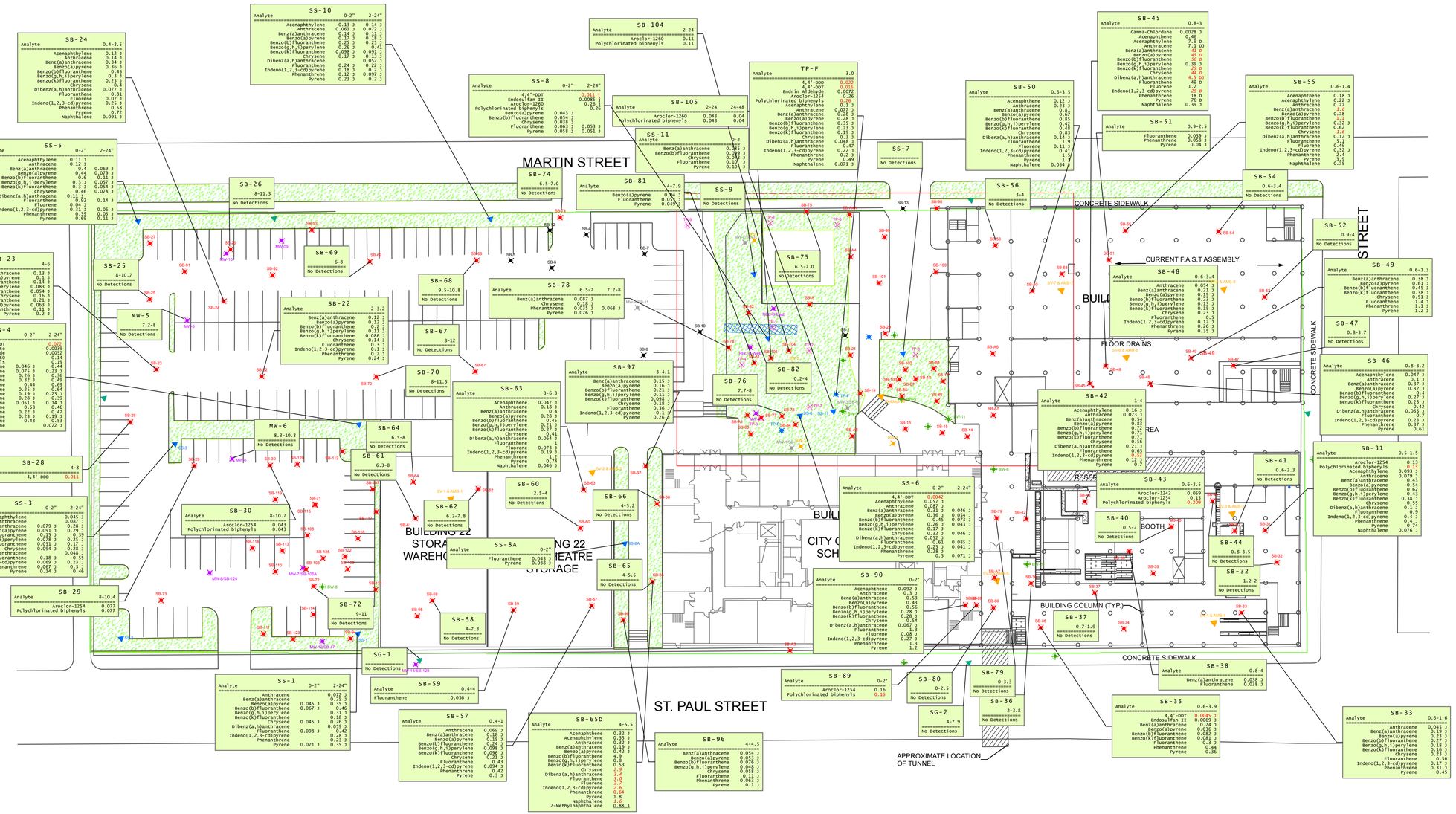

LEGEND

- COMPLETED BCP SOIL BORING
- COMPLETED BCP OVERBURDEN WELLS
- COMPLETED BCP BEDROCK WELLS
- COMPLETED BCP TEST PITS
- COMPLETED BCP SOIL GAS SAMPLE
- COMPLETED BCP SOIL VAPOR SAMPLE
- COMPLETED BCP SURFACE SOIL SAMPLE
- COMPLETED PRE-BCP OVERBURDEN WELL
- COMPLETED PRE-BCP SOIL BORING
- COMPLETED PRE-BCP BEDROCK WELLS
- COMPLETED PRE-BCP PHASE II TEST PIT
- FLOOR DRAIN
- WATER FILLED PIPE IN FLOOR
- TUNNEL
- UNEXCAVATED AREA
- BCP BOUNDARY
- CONCRETE FILLED FLOOR TRENCH (POSSIBLE FORMER PIPE CHASE)
- OPEN FLOOR TRENCH (POSSIBLE PIPE CHASE)
- GRASS COVERED MEDIAN
- STAIRWAY

Note:
(1) SITE PLAN DEVELOPED FROM BERO ASSOCIATES ARCHITECTS SITE PLAN FOR 690 SAINT PAUL STREET, ROCHESTER CHARTER SCHOOL SCIENCE AND TECHNOLOGY, DATED APRIL 11, 2000.
(2) All values in mg/kg.
(3) **Red bold** values exceed NYS Part 376-6.8a for Unrestricted Use.
(4) *Italic* values exceed NYS Part 376-6.8a for Protection of Groundwater.
(5) Underlined values exceed NYS CP-51 SSCO for Residential Use.
(6) Soil samples were collected from Soil Borings at the depth shown. All depths in feet unless otherwise noted.
(7) Soil samples were collected from Surface Soil locations at depths of 0"-2" and 2'-24". If only one of these two depths is shown, the analyte was not detected at the other.
(8) Not all compounds detected above laboratory MDLS. Unless otherwise noted, displayed compounds detected above laboratory MDLS but not above comparison criteria include: Bis(2-ethyl)phtalate, Dibenzofuran, 2-Methylnaphthalene, Di-n-butyl-phthalate and 4-Methyl phenol.

Path: \\PROJECTS1\Projects\AM\Genesee Valley Real Estate Co\209280 - 690 St Paul Remedial Invest\Drawings\SMP\Fig 7D Remaining Contamination SoilSVOAsPestPCB.mxd

LABELLA Associates, D.P.C.
300 STATE STREET
ROCHESTER, NY 14614
P: (585) 454-6110
F: (585)454-3066
www.labellapc.com
COPYRIGHT©2003

DETECTED SELECT SEMI-VOLATILE ORGANIC COMPOUNDS, PESTICIDES, AND POLYCHLORINATED BIPHENYLS IN SOIL SAMPLES

SITE MANAGEMENT PLAN

BROWNFIELD CLEANUP PROGRAM

690 SAINT PAUL STREET ROCHESTER, NEW YORK

VOLUNTEER: GENESEE VALLEY REAL ESTATE COMPANY



It is a violation of New York Education Law Article 145 Sec.7209, for any person, unless acting under the direction of a licensed architect, professional engineer, or land surveyor, to alter an item in any way. If an item bearing the seal of an architect, engineer, or land surveyor is altered; the altering architect, engineer, or land surveyor shall affix to the item their seal and notation "altered by" followed by their signature and date of such alteration, and a specific description of the alteration.

N E W S

0 35 Feet

1 inch = 35 feet

INTENDED TO PRINT ANSI D

DATE; 7/31/2017

209280

FIGURE 7D

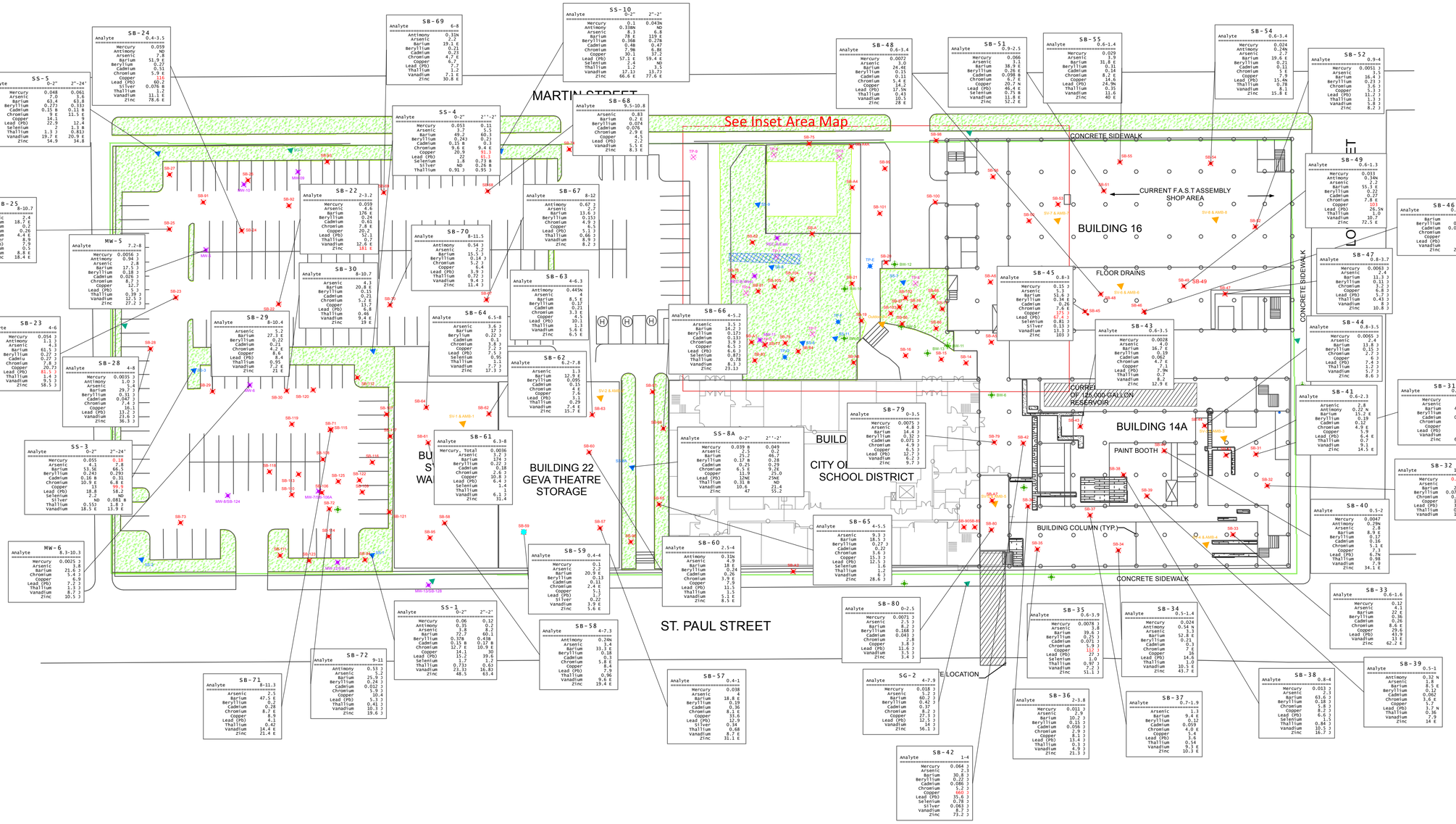
MARTIN STREET
See Inset Area Map
CONCRETE SIDEWALK
BUILDING 16
CURRENT F.A.S.T ASSEMBLY SHOP AREA
FLOOR DRAINS
CONCRETE SIDEWALK
CURRENT 125,000 GALLON RESERVOIR
BUILDING 14A
PAINT BOOTH
BUILDING COLUMN (TYP.)
CONCRETE SIDEWALK
BUILDING 22 GEVA THEATRE STORAGE
CITY OF SCHOOL DISTRICT
ST. PAUL STREET
E LOCATION
SB-24 Analyte 0.4-3.5 Mercury 0.059 Antimony ND Arsenic 7.8 Barium 51.9 E Beryllium 0.27 Cadmium 0.51 Chromium 5.9 E Copper 60.2 Lead (Pb) 0.076 B Silver ND Thallium 1.2 Vanadium 11.1 E Zinc 78.6 E
SS-5 Analyte 0-2" 2"-24' Mercury 0.048 0.061 Arsenic 7.0 1.6 Barium 63.4 61.8 Beryllium 0.27) 0.333 Cadmium 0.15 B 0.11 B Chromium 9 E 11.5 E Copper 14.1 4 Lead (Pb) 22.4 12.4 Selenium 2 1.3 N Thallium 1.3 J 0.813 Vanadium 19.7 E 20.9 E Zinc 54.9 34.8
SB-25 Analyte 8-10.7 Arsenic 2.4 Barium 18.7 E Beryllium 0.2 Cadmium 0.26 Chromium 4.4 E Copper 6 Lead (Pb) 7.9 Thallium 0.5 Vanadium 8.8 E Zinc 18.4 E
MW-5 Analyte 7.2-8 Mercury 0.0056 J Antimony 0.94 J Arsenic 2.8 Barium 17.5 J Beryllium 0.138 J Cadmium 0.076 J Chromium 8.7 J Copper 11.7 J Lead (Pb) 7.7 J Thallium 0.39 J Vanadium 12.5 J Zinc 27.2 J
SB-23 Analyte 4-6 Mercury 0.054 J Antimony 0.44 J Arsenic 4.3 Barium 61.5 J Beryllium 0.27 J Cadmiu 0.277 J Chromium 7.8 J Copper 20.7 J Lead (Pb) 81.5 J Thallium 0.43 J Vanadium 9.5 J Zinc 58.5 J
SB-28 Analyte 4-8 Mercury 0.0035 J Antimony 1.3 J Arsenic 5.4 Barium 29.7 J Beryllium 0.31 J Cadmium 0.047 J Chromium 7.4 J Copper 16.1 J Lead (Pb) 11.2 J Vanadium 23.6 J Zinc 96.3 J
SS-3 Analyte 0-2" 2"-24' Mercury 0.055 0.18 Arsenic 4.1 7.8 Barium 37.5 66.5 Beryllium 0.36 0.31 Cadmium 0.16 B 0.31 Chromium 10.9 E 6.8 E Copper 13 99.9 Lead (Pb) 18.8 58.2 Selenium 2.2 ND Silver ND 0.081 B Thallium 0.553 1.8 J Vanadium 18.5 E 13.9 E
MW-6 Analyte 8.3-10.3 Mercury 0.0025 J Arsenic 3.4 Barium 21.6 J Beryllium 0.4 J Cadmium 0.4 J Copper 6.9 Lead (Pb) 7.2 J Thallium 1.3 J Vanadium 8.7 J Zinc 10.5 J
SB-69 Analyte 6-8 Antimony 0.31N Arsenic 2.2 Barium 19.1 E Beryllium 0.21 Cadmium 0.23 Chromium 4.2 Copper 6.7 Lead (Pb) 7.7 Thallium 1.2 Vanadium 7.1 E Zinc 30.8 E
SS-4 Analyte 0-2" 2"-2' Mercury 0.053 0.11 Arsenic 5.7 6.5 Barium 49.2 60.3 Beryllium 0.243 0.23 Cadmium 0.12 J 0.1 J Chromium 9.6 E 9.4 E Copper 20.9 91.3 Lead (Pb) 22 61.1 Selenium 1.8 0.73 B Silver ND 0.26 B Thallium 0.91 J 0.95 J
SB-22 Analyte 2-3.2 Mercury 0.059 Arsenic 4.6 Barium 176 E Beryllium 0.24 Cadmium 0.61 Chromium 7.8 E Copper 20.2 Lead (Pb) 8.7 J Thallium 0.7 Vanadium 12.6 E Zinc 181 E
SB-30 Analyte 8-10.7 Arsenic 4.3 Beryllium 0.15 Cadmium 0.07 Chromium 5.7 Copper 13.7 Lead (Pb) 6.8 Thallium 0.46 Vanadium 9.4 E Zinc 19 E
SB-29 Analyte 8-10.4 Arsenic 27.3 E Barium 17 J Beryllium 0.22 Cadmium 0.21 Chromium 4.2 E Copper 8.6 Lead (Pb) 8.4 Thallium 0.95 Vanadium 7.1 E Zinc 21 E
SB-61 Analyte 6.3-8 Mercury, Total 0.0036 Arsenic 3.2 J Barium 274 J Beryllium 0.22 J Cadmium 0.28 J Chromium 7.6 J Copper 10.8 J Lead (Pb) 6.4 J Selenium 1.4 Thallium 1 Vanadium 6.1 J Zinc 31.4
SB-67 Analyte 8-12 Antimony 0.67 J Arsenic 7.7 Barium 13.6 J Beryllium 0.153 J Chromium 4.9 J Copper 6.5 Lead (Pb) 5.1 J Thallium 0.66 J Vanadium 8.3 J Zinc 8.2 J
SB-70 Analyte 8-11.5 Antimony 0.54 J Arsenic 2.2 Barium 15.5 J Beryllium 0.14 J Chromium 5.2 J Copper 6.4 Lead (Pb) 3.9 J Thallium 0.72 J Vanadium 9.4 J Zinc 11.4 J
SB-63 Analyte 4-6.3 Antimony 0.445N Arsenic 4 Barium 8.5 E Beryllium 0.17 Cadmium 0.21 Chromium 3.3 E Copper 5.8 Lead (Pb) 10.2 J Thallium 0.3 J Vanadium 5.8 E Zinc 6.5 E
SB-64 Analyte 6.5-8 Arsenic 3.6 J Barium 17 J Beryllium 0.22 J Cadmium 0.1 J Chromium 3.8 J Copper 7.2 J Lead (Pb) 7.5 J Selenium 0.95 Thallium 0.7 J Vanadium 7.7 J Zinc 17.3 J
SB-62 Analyte 6.2-7.8 Arsenic 1.3 Barium 12.9 E Beryllium 0.095 J Cadmium 0.15 Chromium 4 E Copper 7.6 Lead (Pb) 5.4 Thallium 0.28 J Vanadium 7.4 E Zinc 15.7 E
SB-66 Analyte 4-5.2 Arsenic 3.5 J Barium 14.2 J Beryllium 0.171 Cadmium 0.133 Chromium 5.9 J Copper 6.6 J Lead (Pb) 6.2 J Selenium 0.873 Thallium 0.78 Vanadium 8.3 J Zinc 23.13
SS-10 Analyte 0-2" 2"-2' Mercury 0.1 0.043N Antimony 0.338N ND Arsenic 7.2 4.8 Barium 78 E 119 E Beryllium 0.168 0.276 Cadmium 0.48 0.47 Chromium 7.9E 6.8E Copper 30.1 37.7 Lead (Pb) 57.1 E 59.4 E Selenium 2.2 ND Thallium 1 J ND Vanadium 17.13 13.73 Zinc 66.6 E 77.6 E
SB-68 Analyte 9.5-10.8 Arsenic 0.83 Barium 0.27 E Beryllium 0.0054 Cadmium 0.076 J Chromium 2.9 E Copper 4.5 Lead (Pb) 2.2 Thallium 5.5 E Zinc 8.3 E
SB-48 Analyte 0.6-3.4 Mercury 0.0072 Arsenic 1.9 Barium 70.1 Beryllium 0.26 E Cadmium 0.098 B Chromium 6.7 E Copper 20.7 N Lead (Pb) 46.4 E Selenium 0.63 Thallium 11.8 E Vanadium 10.5 Zinc 52.2 E
SB-51 Analyte 0.9-2.5 Mercury 0.066 Arsenic 3.9 Barium 38.9 E Beryllium 0.26 E Cadmium 0.098 B Chromium 6.7 E Copper 20.7 N Lead (Pb) 46.4 E Selenium 0.63 Vanadium 11.8 E Zinc 52.2 E
SB-55 Analyte 0.6-1.4 Mercury 0.029 Arsenic 3.9 Barium 31.6 E Beryllium 0.31 Cadmium 0.14 Chromium 8.2 E Copper 14.6 Lead (Pb) 24.9N Thallium 0.35 Vanadium 11.6 Zinc 40 E
SB-54 Analyte 0.6-3.4 Mercury 0.024 Antimony 0.24N Arsenic 2.7 Barium 19.6 E Beryllium 0.11 Cadmium 0.11 Chromium 5 E Copper 7.9 Lead (Pb) 15.4N Thallium 0.78 Vanadium 8.1 Zinc 15.8 E
SB-52 Analyte 0.9-4 Mercury 0.0051 J Arsenic 3.3 Barium 16.4 J Beryllium 0.23 J Chromium 3.6 J Copper 5.3 J Lead (Pb) 11.2 J Thallium 1.3 J Vanadium 9.8 J Zinc 8.2 J
SB-49 Analyte 0.6-1.3 Mercury 0.033 Antimony 0.34N Arsenic 2.2 Barium 55.3 E Beryllium 0.22 Cadmium 0.27 Chromium 7.8 E Copper 103 Lead (Pb) 26.5N Thallium 1.0 Vanadium 10.7 Zinc 72.5 E
SB-46 Analyte 0.8-3.2 Arsenic 8.4 J Beryllium 0.075 J Chromium 4 J Copper 4.8 J Lead (Pb) 9.2 J Vanadium 9.1 J Zinc 22.2 J
SB-47 Analyte 0.8-3.7 Mercury 0.0063 J Arsenic 2.4 Barium 11.3 J Beryllium 0.11 J Cadmium 0.22 J Lead (Pb) 5.7 J Thallium 0.43 J Vanadium 8 J Zinc 10.8 J
SB-44 Analyte 0.8-3.5 Mercury 0.0065 J Arsenic 2.4 Barium 13.8 J Beryllium 0.15 J Chromium 2.7 J Copper 4.3 J Lead (Pb) 7.4 J Thallium 0.37 J Vanadium 5.7 J Zinc 8.6 J
SB-45 Analyte 0.8-3 Mercury 0.15 J Arsenic 3.2 Barium 53.6 J Beryllium 0.34 E Cadmium 0.26 Chromium 7.6 E Copper 175 J Lead (Pb) 67.2 J Selenium 0.81 J Thallium 0.44 J Vanadium 11.3 J Zinc 103 J
SB-43 Analyte 0.6-3.5 Mercury 0.0028 Arsenic 4.0 Barium 16.7 E Beryllium 0.19 Cadmium 0.062 Chromium 4.2 Copper 7.1 Lead (Pb) 7.7N Thallium 0.7 Vanadium 8.2 Zinc 12.9 E
SB-41 Analyte 0.6-2.3 Arsenic 2.8 Antimony 0.22 N Barium 15.2 E Beryllium 0.19 Cadmium 0.12 Chromium 4 E Copper 5.9 Lead (Pb) 6.4 E Thallium 0.27 Vanadium 9.1 Zinc 14.5 E
SB-31 Analyte 0.5-1.5 Mercury 0.053 Arsenic 3.0 Barium 49.2 E Beryllium 0.23 Cadmium 0.32 N Chromium 9.4 E Copper 10.2 Lead (Pb) 15.9 Vanadium 11 E Zinc 62.5 E
SB-32 Analyte 1.2-2 Mercury 0.29 J Arsenic 2.4 Beryllium 0.075 J Chromium 0.58 J Copper 1.2 J Lead (Pb) 3.7 J Vanadium 1.7 J
SB-40 Analyte 0.5-2 Mercury 0.0047 Antimony 0.29N Arsenic 2.8 Barium 8.9 E Beryllium 0.16 Cadmium 0.16 Chromium 5.3 E Copper 6.7N Lead (Pb) 0.98 Vanadium 7.9 Zinc 34.1 E
SB-33 Analyte 0.6-1.6 Mercury 0.12 Arsenic 4.1 Barium 22 E Beryllium 0.26 Cadmium 0.26 Chromium 8.6 E Copper 29.6 Lead (Pb) 43.9 Vanadium 13 E Zinc 62.2 E
SB-39 Analyte 0.5-1 Antimony 0.32 N Arsenic 3.8 Barium 8.5 E Beryllium 0.12 Cadmium 0.062 Chromium 3.6 E Copper 5.7 Lead (Pb) 5.7 N Thallium 0.56 Vanadium 7.9 Zinc 14 E
SB-38 Analyte 0.8-4 Mercury 0.013 J Arsenic 3.2 Barium 63.6 J Beryllium 0.18 J Chromium 5.8 J Copper 8.2 J Lead (Pb) 6.6 J Selenium 1.5 Thallium 0.84 J Vanadium 10.5 J Zinc 16.7 J
SB-37 Analyte 0.7-1.9 Arsenic 1.1 Barium 9.4 E Beryllium 0.12 Cadmium 0.059 Chromium 4.0 E Copper 5.4 Lead (Pb) 7.2 Thallium 0.54 Vanadium 9.3 E Zinc 10.3 E
SB-36 Analyte 2-3.8 Mercury 0.011 J Arsenic 2.9 Barium 10.2 J Beryllium 0.12 J Cadmium 0.056 J Chromium 2.9 J Copper 8.1 J Lead (Pb) 13.4 J Thallium 0.3 J Vanadium 4.9 J Zinc 21.9 J
SB-35 Analyte 0.6-3.9 Mercury 0.0078 J Arsenic 3.8 Barium 39.6 J Beryllium 0.21 J Cadmium 0.073 J Chromium 5.9 J Copper 112 J Lead (Pb) 27 J Selenium 1.0 Thallium 0.97 J Vanadium 7.2 J Zinc 51.1 J
SB-34 Analyte 0.5-1.4 Mercury 0.024 Antimony 0.34 N Arsenic 3.8 Barium 52.8 E Beryllium 0.21 Cadmium 0.3 Chromium 7 E Copper 16 Lead (Pb) 14.6 Thallium 1.0 Vanadium 10.5 E Zinc 43.7 E
SB-42 Analyte 1-4 Mercury 0.064 J Arsenic 2.3 Barium 30.8 J Beryllium 0.22 J Cadmium 0.086 J Chromium 6.2 J Copper 560 J Lead (Pb) 35.6 J Selenium 0.78 J Silver 0.061 J Vanadium 8.7 J Zinc 73.2 J
SG-2 Analyte 4-7.5 Mercury 0.018 J Arsenic 6.2 J Barium 60.2 J Beryllium 0.42 J Cadmium 0.37 Chromium 8.2 J Copper 27.3 J Lead (Pb) 12.5 J Vanadium 14 J Zinc 56.1 J
SB-80 Analyte 0-2.5 Mercury 0.0071 J Arsenic 2.5 J Barium 39.3 J Beryllium 0.168 J Cadmium 0.043 J Chromium 2.6 Copper 1.8 J Lead (Pb) 11.6 J Vanadium 3.5 J Zinc 3.4 J
SB-80 Analyte 0-2.5 Mercury 0.0071 J Arsenic 2.5 J Barium 39.3 J Beryllium 0.168 J Cadmium 0.043 J Chromium 2.6 Copper 1.8 J Lead (Pb) 11.6 J Vanadium 3.5 J Zinc 3.4 J
SB-65 Analyte 4-5.5 Arsenic 9.3 J Barium 18.5 J Beryllium 0.27 J Cadmium 0.22 Chromium 3.6 J Copper 15.3 J Lead (Pb) 12.5 J Selenium 1.9 Thallium 1.2 Vanadium 7.2 Zinc 28.6 J
SB-79 Analyte 0-3.5 Mercury 0.0075 J Arsenic 3.4 J Barium 14.4 J Beryllium 0.32 J Cadmium 0.071 J Chromium 4.9 J Copper 6.5 J Lead (Pb) 12.7 J Vanadium 6.2 J Zinc 9.7 J
SS-8A Analyte 0-2" 2"-2' Mercury 0.039 B 0.049 Arsenic 2.3 0.2 Barium 25.2 46.7 Beryllium 0.17 B 0.28 Cadmium 0.25 0.29 Chromium 6.1 9.1 Copper 11 9.8 Lead (Pb) 12NE 25NE Thallium 0.31 B ND Vanadium 10.6 21.4 Zinc 47 55.2
SB-60 Analyte 2.5-4 Antimony 0.31N Arsenic 4.9 Barium 38.4 Beryllium 0.24 Cadmium 0.26 Chromium 3.9 E Copper 7.9 Lead (Pb) 11.5 Thallium 1.5 Vanadium 5.3 E Zinc 8.5 E
SB-59 Analyte 0.4-4 Mercury 0.1 Arsenic 2.2 Barium 20.9 E Beryllium 0.13 Cadmium 0.11 Chromium 2.4 E Copper 5.1 Lead (Pb) 5.2 Silver 0.22 Vanadium 3.9 E Zinc 5.6 E
SB-58 Analyte 4-7.3 Antimony 0.24N Arsenic 3.4 Barium 33.3 E Beryllium 0.18 Cadmium 0.2 Chromium 5.8 E Copper 7.9 Lead (Pb) 7.9 Thallium 0.96 Vanadium 9.6 E Zinc 19.4 E
SS-1 Analyte 0-2" 2"-2' Mercury 0.06 0.12 Antimony 0.35 0.2 Arsenic 1.8 8.2 Barium 72.7 60.1 Beryllium 0.378 0.438 Cadmium 0.15 E 0.17 B Chromium 12.7 E 10.9 E Copper 14.1 30 Lead (Pb) 15.2 39.7 Selenium 1.2 1.2 Thallium 0.733 0.63 Vanadium 23.33 16.83 Zinc 48.5 63.4
SB-72 Analyte 9-11 Antimony 0.53 J Arsenic 5.2 Barium 25.5 J Beryllium 0.24 J Cadmium 0.012 J Chromium 5.3 J Copper 10.4 Lead (Pb) 5.3 J Thallium 0.41 J Vanadium 10.3 J Zinc 19.6 J
SB-71 Analyte 8-11.3 Arsenic 2.5 Barium 47.5 E Beryllium 0.2 Chromium 8.2 E Copper 8.9 Lead (Pb) 4.1 Thallium 0.42 Vanadium 14.4 E Zinc 21.4 E
SB-57 Analyte 4-5.1 Mercury 0.038 Arsenic 4 Barium 18.8 E Beryllium 0.19 Cadmium 0.14 Chromium 8.1 E Copper 33.6 Lead (Pb) 12.9 Silver 0.34 Thallium 0.68 Vanadium 8.7 E Zinc 31.1 E
MW-5 Analyte 7.2-8 Mercury 0.0056 J Antimony 0.94 J Arsenic 2.8 Barium 17.5 J Beryllium 0.138 J Cadmium 0.076 J Chromium 8.7 J Copper 11.7 J Lead (Pb) 7.7 J Thallium 0.39 J Vanadium 12.5 J Zinc 27.2 J
SB-70 Analyte 8-11.5 Antimony 0.54 J Arsenic 2.2 Barium 15.5 J Beryllium 0.14 J Chromium 5.2 J Copper 6.4 Lead (Pb) 3.9 J Thallium 0.72 J Vanadium 9.4 J Zinc 11.4 J
SB-63 Analyte 4-6.3 Antimony 0.445N Arsenic 4 Barium 8.5 E Beryllium 0.17 Cadmium 0.21 Chromium 3.3 E Copper 5.8 Lead (Pb) 10.2 J Thallium 0.3 J Vanadium 5.8 E Zinc 6.5 E
SB-64 Analyte 6.5-8 Arsenic 3.6 J Barium 17 J Beryllium 0.22 J Cadmium 0.1 J Chromium 3.8 J Copper 7.2 J Lead (Pb) 7.5 J Selenium 0.95 Thallium 0.7 J Vanadium 7.7 J Zinc 17.3 J
SB-62 Analyte 6.2-7.8 Arsenic 1.3 Barium 12.9 E Beryllium 0.095 J Cadmium 0.15 Chromium 4 E Copper 7.6 Lead (Pb) 5.4 Thallium 0.28 J Vanadium 7.4 E Zinc 15.7 E
SB-66 Analyte 4-5.2 Arsenic 3.5 J Barium 14.2 J Beryllium 0.171 Cadmium 0.133 Chromium 5.9 J Copper 6.6 J Lead (Pb) 6.2 J Selenium 0.873 Thallium 0.78 Vanadium 8.3 J Zinc 23.13
SB-45 Analyte 0.8-3 Mercury 0.15 J Arsenic 3.2 Barium 53.6 J Beryllium 0.34 E Cadmium 0.26 Chromium 7.6 E Copper 175 J Lead (Pb) 67.2 J Selenium 0.81 J Thallium 0.44 J Vanadium 11.3 J Zinc 103 J
SB-43 Analyte 0.6-3.5 Mercury 0.0028 Arsenic 4.0 Barium 16.7 E Beryllium 0.19 Cadmium 0.062 Chromium 4.2 Copper 7.1 Lead (Pb) 7.7N Thallium 0.7 Vanadium 8.2 Zinc 12.9 E
SB-41 Analyte 0.6-2.3 Arsenic 2.8 Antimony 0.22 N Barium 15.2 E Beryllium 0.19 Cadmium 0.12 Chromium 4 E Copper 5.9 Lead (Pb) 6.4 E Thallium 0.27 Vanadium 9.1 Zinc 14.5 E
SB-31 Analyte 0.5-1.5 Mercury 0.053 Arsenic 3.0 Barium 49.2 E Beryllium 0.23 Cadmium 0.32 N Chromium 9.4 E Copper 10.2 Lead (Pb) 15.9 Vanadium 11 E Zinc 62.5 E
SB-40 Analyte 0.5-2 Mercury 0.0047 Antimony 0.29N Arsenic 2.8 Barium 8.9 E Beryllium 0.16 Cadmium 0.16 Chromium 5.3 E Copper 6.7N Lead (Pb) 0.98 Vanadium 7.9 Zinc 34.1 E
SB-32 Analyte 1.2-2 Mercury 0.29 J Arsenic 2.4 Beryllium 0.075 J Chromium 0.58 J Copper 1.2 J Lead (Pb) 3.7 J Vanadium 1.7 J
SB-33 Analyte 0.6-1.6 Mercury 0.12 Arsenic 4.1 Barium 22 E Beryllium 0.26 Cadmium 0.26 Chromium 8.6 E Copper 29.6 Lead (Pb) 43.9 Vanadium 13 E Zinc 62.2 E
SB-39 Analyte 0.5-1 Antimony 0.32 N Arsenic 3.8 Barium 8.5 E Beryllium 0.12 Cadmium 0.062 Chromium 3.6 E Copper 5.7 Lead (Pb) 5.7 N Thallium 0.56 Vanadium 7.9 Zinc 14 E
SB-42 Analyte 1-4 Mercury 0.064 J Arsenic 2.3 Barium 30.8 J Beryllium 0.22 J Cadmium 0.086 J Chromium 6.2 J Copper 560 J Lead (Pb) 35.6 J Selenium 0.78 J Silver 0.061 J Vanadium 8.7 J Zinc 73.2 J
SB-38 Analyte 0.8-4 Mercury 0.013 J Arsenic 3.2 Barium 63.6 J Beryllium 0.18 J Chromium 5.8 J Copper 8.2 J Lead (Pb) 6.6 J Selenium 1.5 Thallium 0.84 J Vanadium 10.5 J Zinc 16.7 J
SB-37 Analyte 0.7-1.9 Arsenic 1.1 Barium 9.4 E Beryllium 0.12 Cadmium 0.059 Chromium 4.0 E Copper 5.4 Lead (Pb) 7.2 Thallium 0.54 Vanadium 9.3 E Zinc 10.3 E
SB-36 Analyte 2-3.8 Mercury 0.011 J Arsenic 2.9 Barium 10.2 J Beryllium 0.12 J Cadmium 0.056 J Chromium 2.9 J Copper 8.1 J Lead (Pb) 13.4 J Thallium 0.3 J Vanadium 4.9 J Zinc 21.9 J
SB-35 Analyte 0.6-3.9 Mercury 0.0078 J Arsenic 3.8 Barium 39.6 J Beryllium 0.21 J Cadmium 0.073 J Chromium 5.9 J Copper 112 J Lead (Pb) 27 J Selenium 1.0 Thallium 0.97 J Vanadium 7.2 J Zinc 51.1 J
SB-34 Analyte 0.5-1.4 Mercury 0.024 Antimony 0.34 N Arsenic 3.8 Barium 52.8 E Beryllium 0.21 Cadmium 0.3 Chromium 7 E Copper 16 Lead (Pb) 14.6 Thallium 1.0 Vanadium 10.5 E Zinc 43.7 E
SB-49 Analyte 0.6-1.3 Mercury 0.033 Antimony 0.34N Arsenic 2.2 Barium 55.3 E Beryllium 0.22 Cadmium 0.27 Chromium 7.8 E Copper 103 Lead (Pb) 26.5N Thallium 1.0 Vanadium 10.7 Zinc 72.5 E
SB-46 Analyte 0.8-3.2 Arsenic 8.4 J Beryllium 0.075 J Chromium 4 J Copper 4.8 J Lead (Pb) 9.2 J Vanadium 9.1 J Zinc 22.2 J
SB-47 Analyte 0.8-3.7 Mercury 0.0063 J Arsenic 2.4 Barium 11.3 J Beryllium 0.11 J Cadmium 0.22 J Lead (Pb) 5.7 J Thallium 0.43 J Vanadium 8 J Zinc 10.8 J
SB-44 Analyte 0.8-3.5 Mercury 0.0065 J Arsenic 2.4 Barium 13.8 J Beryllium 0.15 J Chromium 2.7 J Copper 4.3 J Lead (Pb) 7.4 J Thallium 0.37 J Vanadium 5.7 J Zinc 8.6 J
SB-41 Analyte 0.6-2.3 Arsenic 2.8 Antimony 0.22 N Barium 15.2 E Beryllium 0.19 Cadmium 0.12 Chromium 4 E Copper 5.9 Lead (Pb) 6.4 E Thallium 0.27 Vanadium 9.1 Zinc 14.5 E
SB-31 Analyte 0.5-1.5 Mercury 0.053 Arsenic 3.0 Barium 49.2 E Beryllium 0.23 Cadmium 0.32 N Chromium 9.4 E Copper 10.2 Lead (Pb) 15.9 Vanadium 11 E Zinc 62.5 E
SB-32 Analyte 1.2-2 Mercury 0.29 J Arsenic 2.4 Beryllium 0.075 J Chromium 0.58 J Copper 1.2 J Lead (Pb) 3.7 J Vanadium 1.7 J
SB-33 Analyte 0.6-1.6 Mercury 0.12 Arsenic 4.1 Barium 22 E Beryllium 0.26 Cadmium 0.26 Chromium 8.6 E Copper 29.6 Lead (Pb) 43.9 Vanadium 13 E Zinc 62.2 E
SB-39 Analyte 0.5-1 Antimony 0.32 N Arsenic 3.8 Barium 8.5 E Beryllium 0.12 Cadmium 0.062 Chromium 3.6 E Copper 5.7 Lead (Pb) 5.7 N Thallium 0.56 Vanadium 7.9 Zinc 14 E
SB-38 Analyte 0.8-4 Mercury 0.013 J Arsenic 3.2 Barium 63.6 J Beryllium 0.18 J Chromium 5.8 J Copper 8.2 J Lead (Pb) 6.6 J Selenium 1.5 Thallium 0.84 J Vanadium 10.5 J Zinc 16.7 J
SB-37 Analyte 0.7-1.9 Arsenic 1.1 Barium 9.4 E Beryllium 0.12 Cadmium 0.059 Chromium 4.0 E Copper 5.4 Lead (Pb) 7.2 Thallium 0.54 Vanadium 9.3 E Zinc 10.3 E
SB-36 Analyte 2-3.8 Mercury 0.011 J Arsenic 2.9 Barium 10.2 J Beryllium 0.12 J Cadmium 0.056 J Chromium 2.9 J Copper 8.1 J Lead (Pb) 13.4 J Thallium 0.3 J Vanadium 4.9 J Zinc 21.9 J
SB-35 Analyte 0.6-3.9 Mercury 0.0078 J Arsenic 3.8 Barium 39.6 J Beryllium 0.21 J Cadmium 0.073 J Chromium 5.9 J Copper 112 J Lead (Pb) 27 J Selenium 1.0 Thallium 0.97 J Vanadium 7.2 J Zinc 51.1 J
SB-34 Analyte 0.5-1.4 Mercury 0.024 Antimony 0.34 N Arsenic 3.8 Barium 52.8 E Beryllium 0.21 Cadmium 0.3 Chromium 7 E Copper 16 Lead (Pb) 14.6 Thallium 1.0 Vanadium 10.5 E Zinc 43.7 E
SB-49 Analyte 0.6-1.3 Mercury 0.033 Antimony 0.34N Arsenic 2.2 Barium 55.3 E Beryllium 0.22 Cadmium 0.27 Chromium 7.8 E Copper 103 Lead (Pb) 26.5N Thallium 1.0 Vanadium 10.7 Zinc 72.5 E
SB-46 Analyte 0.8-3.2 Arsenic 8.4 J Beryllium 0.075 J Chromium 4 J Copper 4.8 J Lead (Pb) 9.2 J Vanadium 9.1 J Zinc 22.2 J
SB-47 Analyte 0.8-3.7 Mercury 0.0063 J Arsenic 2.4 Barium 11.3 J Beryllium 0.11 J Cadmium 0.22 J Lead (Pb) 5.7 J Thallium 0.43 J Vanadium 8 J Zinc 10.8 J
SB-44 Analyte 0.8-3.5 Mercury 0.0065 J Arsenic 2.4 Barium 13.8 J Beryllium 0.15 J Chromium 2.7 J Copper 4.3 J Lead (Pb) 7.4 J Thallium 0.37 J Vanadium 5.7 J Zinc 8.6 J
SB-45 Analyte 0.8-3 Mercury 0.15 J Arsenic 3.2 Barium 53.6 J Beryllium 0.34 E Cadmium 0.26 Chromium 7.6 E Copper 175 J Lead (Pb) 67.2 J Selenium 0.81 J Thallium 0.44 J Vanadium 11.3 J Zinc 103 J
SB-43 Analyte 0.6-3.5 Mercury 0.0028 Arsenic 4.0 Barium 16.7 E Beryllium 0.19 Cadmium 0.062 Chromium 4.2 Copper 7.1 Lead (Pb) 7.7N Thallium 0.7 Vanadium 8.2 Zinc 12.9 E
SB-41 Analyte 0.6-2.3 Arsenic 2.8 Antimony 0.22 N Barium 15.2 E Beryllium 0.19 Cadmium 0.12 Chromium 4 E Copper 5.9 Lead (Pb) 6.4 E Thallium 0.27 Vanadium 9.1 Zinc 14.5 E
SB-31 Analyte 0.5-1.5 Mercury 0.053 Arsenic 3.0 Barium 49.2 E Beryllium 0.23 Cadmium 0.32 N Chromium 9.4 E Copper 10.2 Lead (Pb) 15.9 Vanadium 11 E Zinc 62.5 E
SB-40 Analyte 0.5-2 Mercury 0.0047 Antimony 0.29N Arsenic 2.8 Barium 8.9 E Beryllium 0.16 Cadmium 0.16 Chromium 5.3 E Copper 6.7N Lead (Pb) 0.98 Vanadium 7.9 Zinc 34.1 E
SB-32 Analyte 1.2-2 Mercury 0.29 J Arsenic 2.4 Beryllium 0.075 J Chromium 0.58 J Copper 1.2 J Lead (Pb) 3.7 J Vanadium 1.7 J
SB-33 Analyte 0.6-1.6 Mercury 0.12 Arsenic 4.1 Barium 22 E Beryllium 0.26 Cadmium 0.26 Chromium 8.6 E Copper 29.6 Lead (Pb) 43.9 Vanadium 13 E Zinc 62.2 E
SB-39 Analyte 0.5-1 Antimony 0.32 N Arsenic 3.8 Barium 8.5 E Beryllium 0.12 Cadmium 0.062 Chromium 3.6 E Copper 5.7 Lead (Pb) 5.7 N Thallium 0.56 Vanadium 7.9 Zinc 14 E
SB-38 Analyte 0.8-4 Mercury 0.013 J Arsenic 3.2 Barium 63.6 J Beryllium 0.18 J Chromium 5.8 J Copper 8.2 J Lead (Pb) 6.6 J Selenium 1.5 Thallium 0.84 J Vanadium 10.5 J Zinc 16.7 J
SB-37 Analyte 0.7-1.9 Arsenic 1.1 Barium 9.4 E Beryllium 0.12 Cadmium 0.059 Chromium 4.0 E Copper 5.4 Lead (Pb) 7.2 Thallium 0.54 Vanadium 9.3 E Zinc 10.3 E
SB-36 Analyte 2-3.8 Mercury 0.011 J Arsenic 2.9 Barium 10.2 J Beryllium 0.12 J Cadmium 0.056 J Chromium 2.9 J Copper 8.1 J Lead (Pb) 13.4 J Thallium 0.3 J Vanadium 4.9 J Zinc 21.9 J
SB-35 Analyte 0.6-3.9 Mercury 0.0078 J Arsenic 3.8 Barium 39.6 J Beryllium 0.21 J Cadmium 0.073 J Chromium 5.9 J Copper 112 J Lead (Pb) 27 J Selenium 1.0 Thallium 0.97 J Vanadium 7.2 J Zinc 51.1 J
SB-34 Analyte 0.5-1.4 Mercury 0.024 Antimony 0.34 N Arsenic 3.8 Barium 52.8 E Beryllium 0.21 Cadmium 0.3 Chromium 7 E Copper 16 Lead (Pb) 14.6 Thallium 1.0 Vanadium 10.5 E Zinc 43.7 E
SB-49 Analyte 0.6-1.3 Mercury 0.033 Antimony 0.34N Arsenic 2.2 Barium 55.3 E Beryllium 0.22 Cadmium 0.27 Chromium 7.8 E Copper 103 Lead (Pb) 26.5N Thallium 1.0 Vanadium 10.7 Zinc 72.5 E
SB-46 Analyte 0.8-3.2 Arsenic 8.4 J Beryllium 0.075 J Chromium 4 J Copper 4.8 J Lead (Pb) 9.2 J Vanadium 9.1 J Zinc 22.2 J
SB-47 Analyte 0.8-3.7 Mercury 0.0063 J Arsenic 2.4 Barium 11.3 J Beryllium 0.11 J Cadmium 0.22 J Lead (Pb) 5.7 J Thallium 0.43 J Vanadium 8 J Zinc 10.8 J
SB-44 Analyte 0.8-3.5 Mercury 0.0065 J Arsenic 2.4 Barium 13.8 J Beryllium 0.15 J Chromium 2.7 J Copper 4.3 J Lead (Pb) 7.4 J Thallium 0.37 J Vanadium 5.7 J Zinc 8.6 J
SB-41 Analyte 0.6-2.3 Arsenic 2.8 Antimony 0.22 N Barium 15.2 E Beryllium 0.19 Cadmium 0.12 Chromium 4 E Copper 5.9 Lead (Pb) 6.4 E Thallium 0.27 Vanadium 9.1 Zinc 14.5 E
SB-31 Analyte 0.5-1.5 Mercury 0.053 Arsenic 3.0 Barium 49.2 E Beryllium 0.23 Cadmium 0.32 N Chromium 9.4 E Copper 10.2 Lead (Pb) 15.9 Vanadium 11 E Zinc 62.5 E
SB-40 Analyte 0.5-2 Mercury 0.0047 Antimony 0.29N Arsenic 2.8 Barium 8.9 E Beryllium 0.16 Cadmium 0.16 Chromium 5.3 E Copper 6.7N Lead (Pb) 0.98 Vanadium 7.9 Zinc 34.1 E
SB-32 Analyte 1.2-2 Mercury 0.29 J Arsenic 2.4 Beryllium 0.075 J Chromium 0.58 J Copper 1.2 J Lead (Pb) 3.7 J Vanadium 1.7 J
SB-33 Analyte 0.6-1.6 Mercury 0.12 Arsenic 4.1 Barium 22 E Beryllium 0.26 Cadmium 0.26 Chromium 8.6 E Copper 29.6 Lead (Pb) 43.9 Vanadium 13 E Zinc 62.2 E
SB-39 Analyte 0.5-1 Antimony 0.32 N Arsenic 3.8 Barium 8.5 E Beryllium 0.12 Cadmium 0.062 Chromium 3.6 E Copper 5.7 Lead (Pb) 5.7 N Thallium 0.56 Vanadium 7.9 Zinc 14 E
SB-38 Analyte 0.8-4 Mercury 0.013 J Arsenic 3.2 Barium 63.6 J Beryllium 0.18 J Chromium 5.8 J Copper 8.2 J Lead (Pb) 6.6 J Selenium 1.5 Thallium 0.84 J Vanadium 10.5 J Zinc 16.7 J
SB-37 Analyte 0.7-1.9 Arsenic 1.1 Barium 9.4 E Beryllium 0.12 Cadmium 0.059 Chromium 4.0 E Copper 5.4 Lead (Pb) 7.2 Thallium 0.54 Vanadium 9.3 E Zinc 10.3 E
SB-36 Analyte 2-3.8 Mercury 0.011 J Arsenic 2.9 Barium 10.2 J Beryllium 0.12 J Cadmium 0.056 J Chromium 2.9 J Copper 8.1 J Lead (Pb) 13.4 J Thallium 0.3 J Vanadium 4.9 J Zinc 21.9 J
SB-35 Analyte 0.6-3.9 Mercury 0.0078 J Arsenic 3.8 Barium 39.6 J Beryllium 0.21 J Cadmium 0.073 J Chromium 5.9 J Copper 112 J Lead (Pb) 27 J Selenium 1.0 Thallium 0.97 J Vanadium 7.2 J Zinc 51.1 J
SB-34 Analyte 0.5-1.4 Mercury 0.024 Antimony 0.34 N Arsenic 3.8 Barium 52.8 E Beryllium 0.21 Cadmium 0.3 Chromium 7 E Copper 16 Lead (Pb) 14.6 Thallium 1.0 Vanad

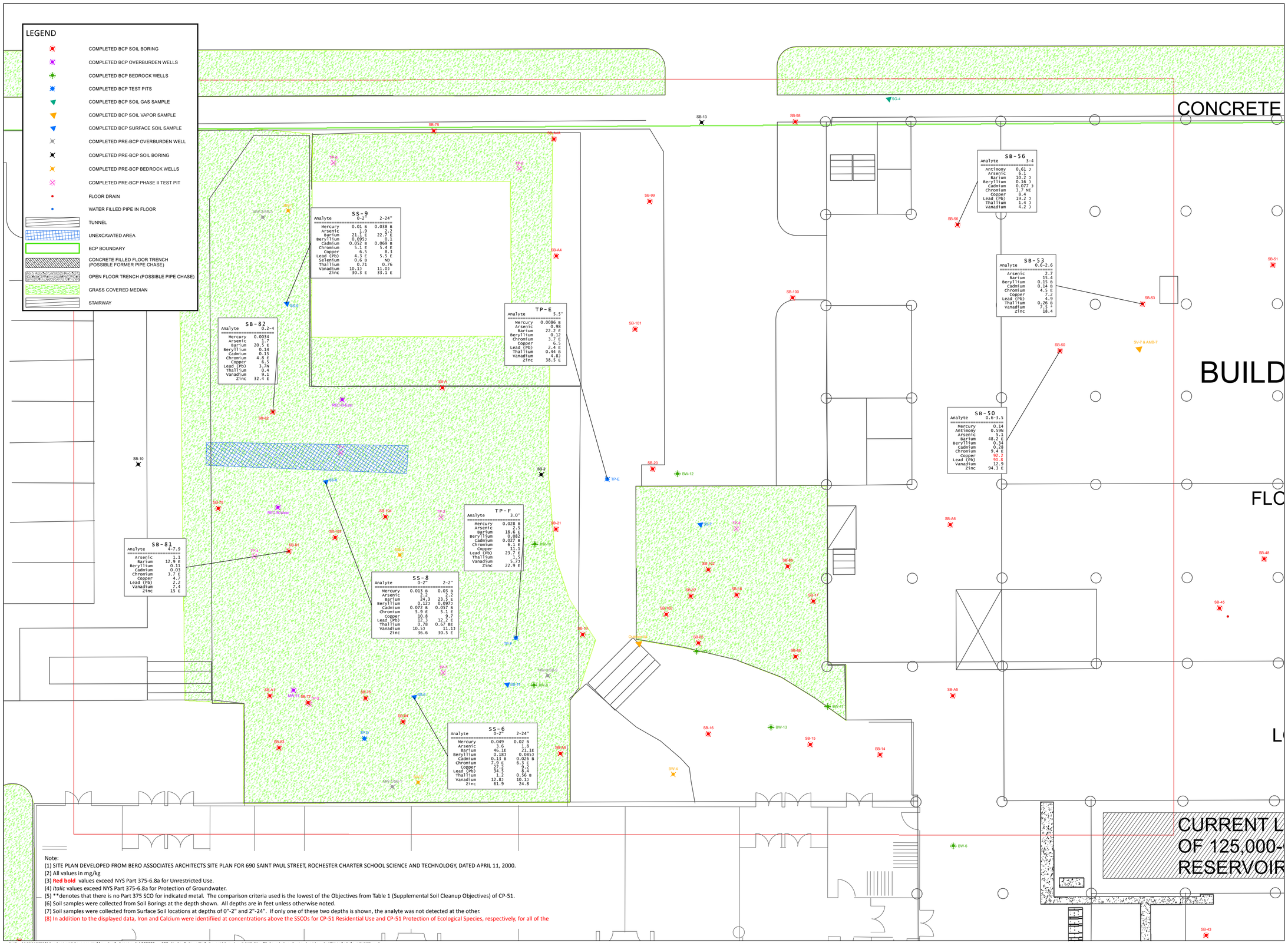
LEGEND
COMPLETED BCP SOIL BORING
COMPLETED BCP OVERBURDEN WELLS
COMPLETED BCP BEDROCK WELLS
COMPLETED BCP TEST PITS
COMPLETED BCP SOIL GAS SAMPLE
COMPLETED BCP SOIL VAPOR SAMPLE
COMPLETED BCP SURFACE SOIL SAMPLE
COMPLETED PRE-BCP OVERBURDEN WELL
COMPLETED PRE-BCP SOIL BORING
COMPLETED PRE-BCP BEDROCK WELLS
COMPLETED PRE-BCP PHASE II TEST PIT
FLOOR DRAIN
WATER FILLED PIPE IN FLOOR
TUNNEL
UNEXCAVATED AREA
BCP BOUNDARY
CONCRETE FILLED FLOOR TRENCH (POSSIBLE FORMER PIPE CHASE)
OPEN FLOOR TRENCH (POSSIBLE PIPE CHASE)
GRASS COVERED MEDIAN
STAIRWAY
CONCRETE
BUILD
FLO
L
CURRENT L
OF 125,000-
RESERVOIR
SS-9
Analyte 0-2" 2-24"
Mercury 0.01 B 0.038 B
Arsenic 1.9 2.2
Barium 21.1 E 22.7 E
Beryllium 0.095J 0.1
Cadmium 0.052 B 0.069 B
Chromium 5.1 E 5.4 E
Copper 6.5 8.3
Lead (Pb) 4.3 E 5.5 E
Selenium 0.6 B ND
Thallium 0.71 0.76
Vanadium 10.13 11.03
Zinc 30.3 E 33.1 E
SB-82
Analyte 0.2-4
Mercury 0.0034
Arsenic 1.7
Barium 20.5 E
Beryllium 0.14
Cadmium 0.15
Chromium 4.8 E
Copper 6.5
Lead (Pb) 3.7H
Thallium 0.4
Vanadium 9.1
Zinc 32.4 E
TP-E
Analyte 5.5'
Mercury 0.0086 B
Arsenic 0.98
Barium 22.2 E
Beryllium 0.12
Chromium 3.7 E
Copper 6.5
Lead (Pb) 2.4 E
Thallium 0.44 B
Vanadium 4.8J
Zinc 38.5 E
TP-F
Analyte 3.0'
Mercury 0.028 B
Arsenic 2.5
Barium 18.6 E
Beryllium 0.082
Cadmium 0.027 B
Chromium 6.1 E
Copper 11.1
Lead (Pb) 23.7 E
Thallium 1.5
Vanadium 5.7J
Zinc 22.9 E
SB-81
Analyte 4-7.9
Arsenic 1.1
Barium 12.9 E
Beryllium 0.11
Cadmium 0.03
Chromium 3.7 E
Copper 4.7
Lead (Pb) 2.2
Vanadium 7.4
Zinc 15 E
SS-8
Analyte 0-2" 2-2"
Mercury 0.013 B 0.03 B
Arsenic 2.2 2.2
Barium 24.3 23.5 E
Beryllium 0.12J 0.097J
Cadmium 0.072 B 0.057 B
Chromium 5.9 E 5.1 E
Copper 10.8 9.7
Lead (Pb) 3.3 12.7 E
Thallium 0.78 0.67 BE
Vanadium 10.53 11.13
Zinc 36.6 30.5 E
SS-6
Analyte 0-2" 2-24"
Mercury 0.049 0.02 B
Arsenic 3.6 1.8
Barium 46.1E 21.1E
Beryllium 0.18J 0.085J
Cadmium 0.13 B 0.026 B
Chromium 7.9 E 6.3 E
Copper 27.2 9.2
Lead (Pb) 34.5 8.4
Thallium 1.2 0.56 B
Vanadium 12.8J 10.1J
Zinc 61.9 24.8
SB-56
Analyte 3-4
Antimony 0.61 J
Arsenic 6.1
Barium 10.2 J
Beryllium 0.16 J
Cadmium 0.077 J
Chromium 3.7 NE
Copper 8.4
Lead (Pb) 19.2 J
Thallium 1.4 J
Vanadium 4.2 J
SB-53
Analyte 0.6-2.6
Arsenic 2.7
Barium 15.4
Beryllium 0.15 B
Cadmium 0.14 B
Chromium 4.5 E
Copper 7.2
Lead (Pb) 4.9
Thallium 0.26 B
Vanadium 7.5 *
Zinc 18.4
SB-50
Analyte 0.6-3.5
Mercury 0.14
Antimony 0.59N
Arsenic 5.1
Barium 48.2 E
Beryllium 0.34
Cadmium 0.28
Chromium 9.4 E
Copper 92.2
Lead (Pb) 90.8
Vanadium 12.9
Zinc 94.3 E
SB-75
SB-74A
SB-13
SB-98
SB-99
SB-A4
SB-100
SB-101
SB-A
SB-20
SB-2
SB-21
SB-10
SB-73
SB-104
SB-103
SB-1
SB-41
SB-77
SB-76
SB-A1
SB-104
SB-83
SB-84
SB-99
SB-16
SB-15
SB-14
SB-A6
SB-48
SB-102
SB-45
SB-97
SB-18
SB-17
SB-102
SB-95
SB-96
SB-A5
SB-43
SB-61
SB-53
SB-50
SB-A3
SB-A2
SB-A7
SB-A8
SB-A9
SB-A10
SB-A11
SB-A12
SB-A13
SB-A14
SB-A15
SB-A16
SB-A17
SB-A18
SB-A19
SB-A20
SB-A21
SB-A22
SB-A23
SB-A24
SB-A25
SB-A26
SB-A27
SB-A28
SB-A29
SB-A30
SB-A31
SB-A32
SB-A33
SB-A34
SB-A35
SB-A36
SB-A37
SB-A38
SB-A39
SB-A40
SB-A41
SB-A42
SB-A43
SB-A44
SB-A45
SB-A46

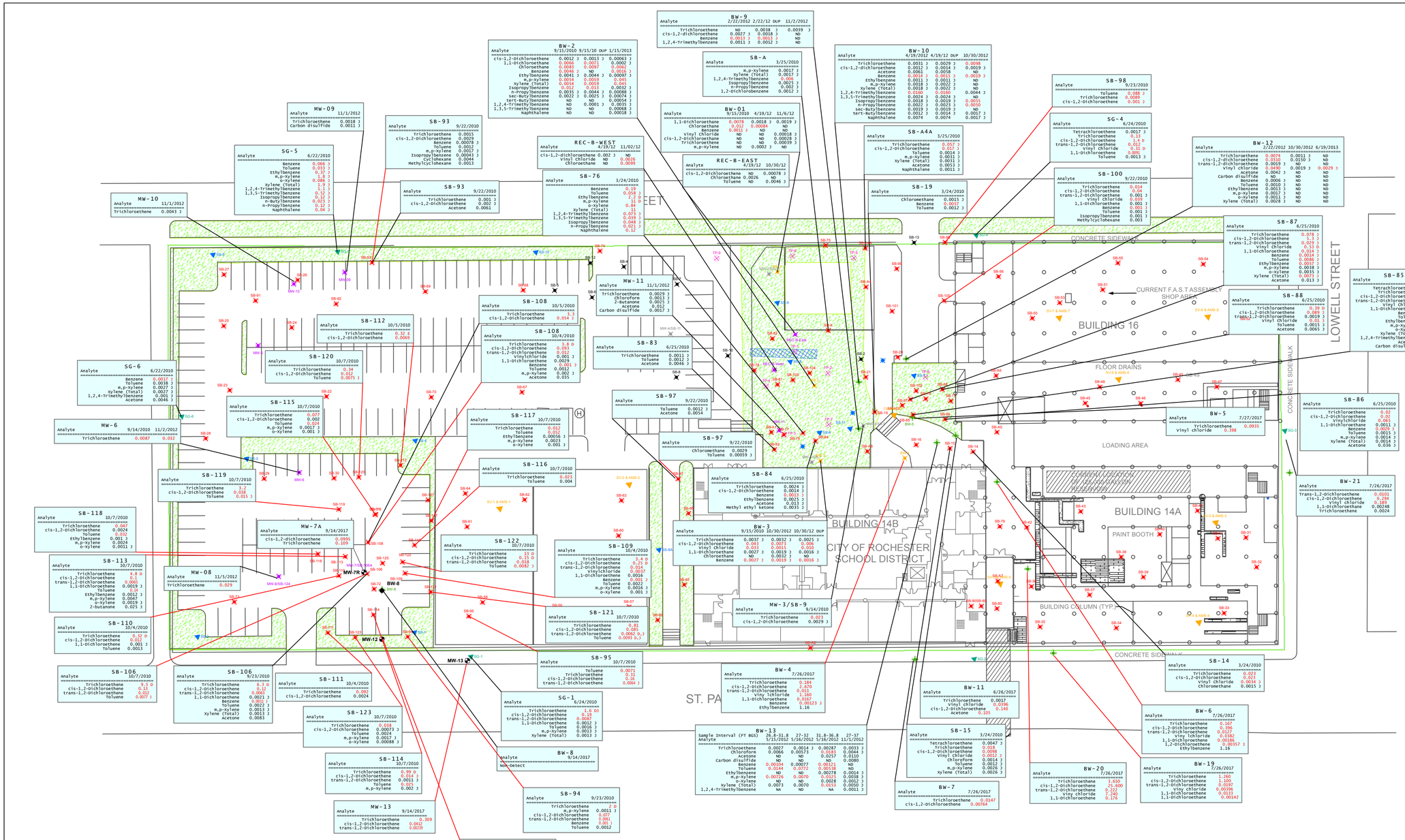
MW-10
Analyte 11/1/2012
Trichloroethene 0.0043 J
MW-09
Analyte 11/1/2012
Trichloroethene 0.0018 J
Carbon disulfide 0.0011 J
SG-5
Analyte 6/22/2010
Benzene 0.066 J
Toluene 0.033 J
Ethylbenzene 0.37 J
m,p-Xylene 0.086 J
o-Xylene 0.039 J
Xylene (Total) 1.9 J
1,2,4-Trimethylbenzene 1.1 J
1,3,5-Trimethylbenzene 0.52 J
Isopropylbenzene 0.12 J
n-Butylbenzene 0.023 J
n-Propylbenzene 0.12 J
Naphthalene 0.04 J
SB-93
Analyte 9/22/2010
Trichloroethene 0.0015 J
cis-1,2-Dichloroethene 0.025
Benzene 0.00078 J
Toluene 0.0012 J
m,p-Xylene 0.0017 J
Isopropylbenzene 0.00043 J
Cyclohexane 0.0044
Methylcyclohexane 0.0013
SB-93
Analyte 9/22/2010
Trichloroethene 0.001 J
cis-1,2-Dichloroethene 0.002 J
Acetone 0.0061
REC-B-WEST
Analyte 4/19/12 11/02/12
cis-1,2-dichloroethene 0.002 J ND
Vinyl Chloride ND 0.0026
Chloroethane ND 0.0099
SB-76
Analyte 3/24/2010
Benzene 0.19
Toluene 0.058 J
Ethylbenzene 2.2 D
m,p-Xylene 11 D
o-Xylene 0.84
Xylene (Total) 12
1,2,4-Trimethylbenzene 0.073 J
1,3,5-Trimethylbenzene 0.039 J
Isopropylbenzene 0.046 J
n-Propylbenzene 0.021 J
Naphthalene 0.12
BW-2
Analyte 9/15/2010 9/15/10 DUP 1/15/2013
cis-1,2-Dichloroethene 0.0012 J 0.0013 J 0.00063 J
1,1-Dichloroethene 0.0066 0.0071 0.0002 J
Chloroform 0.0046 J 0.007 0.0016 J
Benzene 0.0046 J ND 0.0016 J
Ethylbenzene 0.0041 J 0.0044 J 0.00097 J
m,p-Xylene 0.0054 0.0059 0.045
Xylene (Total) 0.0054 0.0059 0.045
Isopropylbenzene 0.012 0.013 0.0032 J
n-Propylbenzene 0.0035 J 0.0044 J 0.00088 J
sec-Butylbenzene 0.0022 J 0.0025 J 0.00074 J
tert-Butylbenzene ND ND 0.00015 J
1,2,4-Trimethylbenzene ND ND 0.0016 J
1,3,5-Trimethylbenzene ND ND 0.0008 J
Naphthalene ND ND 0.00018 J
BW-9
Analyte 2/22/2012 2/22/12 DUP 11/2/2012
Trichloroethene ND 0.0038 J 0.0039 J
cis-1,2-dichloroethene 0.0027 J 0.0018 J ND
Benzene 0.0011 J 0.0012 J ND
1,2,4-Trimethylbenzene 0.0011 J 0.0012 J ND
SB-A
Analyte 3/25/2010
m,p-Xylene 0.0017 J
Xylene (Total) 0.0017 J
1,2,4-Trimethylbenzene 0.0011 J
Isopropylbenzene 0.0025 J
n-Propylbenzene 0.0022 J
1,2-Dichlorobenzene 0.0012 J
BW-01
Analyte 9/15/2010 4/19/12 11/6/12
1,1-Dichloroethene 0.0078 0.0018 J 0.0019 J
Chloroform ND 0.00084 ND
Benzene 0.0011 J ND ND
Vinyl Chloride ND ND 0.00018 J
cis-1,2-dichloroethene ND ND 0.00028 J
Trichloroethene ND ND 0.00039 J
REC-B-EAST
Analyte 4/19/12 10/30/12
cis-1,2-dichloroethene ND 0.00078 J
Chloroethane 0.0026 ND
Toluene ND 0.0046 J
BW-10
Analyte 4/19/2012 4/19/12 DUP 10/30/2012
Trichloroethene 0.0031 J 0.0029 J 0.0098
cis-1,2-dichloroethene 0.0012 J 0.0014 J 0.0019 J
Acetone 0.0061 0.0058 J
Benzene 0.0023 J 0.0024 J 0.0089 J
Ethylbenzene 0.0011 J 0.0011 J ND
m,p-Xylene 0.0018 J 0.0022 J ND
Xylene (Total) 0.0018 J 0.0022 J ND
1,2,4-Trimethylbenzene 0.0160 0.0160 0.0044 J
1,3,5-Trimethylbenzene 0.0024 J 0.0024 J ND
Isopropylbenzene 0.0018 J 0.0019 J 0.0051
n-Propylbenzene 0.0023 J 0.0024 J 0.0030
sec-Butylbenzene 0.0019 J 0.0019 J ND
tert-Butylbenzene 0.0012 J 0.0014 J 0.0017 J
Naphthalene 0.0074 0.0074 0.0017 J
SB-A4A
Analyte 3/25/2010
Trichloroethene 0.007 J
cis-1,2-Dichloroethene 0.0012 J
m,p-Xylene 0.0031 J
Xylene (Total) 0.0031 J
Acetone 0.0053 J
Naphthalene 0.0011 J
SB-19
Analyte 3/24/2010
Chloromethane 0.0015 J
Benzene 0.0011 J
Toluene 0.0012 J
SB-98
Analyte 9/23/2010
Toluene 0.088 J
Trichloroethene 0.0089 J
cis-1,2-Dichloroethene 0.001 J
SG-4
Analyte 6/24/2010
Tetrachloroethene 0.0017 J
Benzene 0.13
cis-1,2-Dichloroethene 1.4 D
trans-1,2-Dichloroethene 0.012 J
Vinyl Chloride 0.31 D
1,1-Dichloroethene 0.021 J
Toluene 0.0013 J
SB-100
Analyte 9/22/2010
Trichloroethene 0.014
cis-1,2-Dichloroethene 0.71
trans-1,2-Dichloroethene 0.001 J
Vinyl Chloride 0.098
1,1-Dichloroethene 0.001 J
Benzene 0.001 J
Toluene 0.001 J
Isopropylbenzene 0.001 J
Methylcyclohexane 0.001 J
BW-12
Analyte 2/22/2012 10/30/2012 6/19/2013
Trichloroethene 0.0074 0.0011 J ND
cis-1,2-dichloroethene 0.0310 0.0150 ND
trans-1,2-dichloroethene 0.0019 J ND ND
Vinyl chloride 0.0490 0.0019 J 0.0029 J
Acetone 0.0042 J ND ND
Carbon disulfide ND ND ND
Benzene 0.0006 J ND ND
Toluene 0.0010 J ND ND
Ethylbenzene 0.0011 J ND ND
m,p-Xylene 0.0017 J ND ND
o-Xylene 0.0011 J ND ND
Xylene (Total) 0.0028 J ND ND
SB-87
Analyte 6/25/2010
Trichloroethene 0.078 J
cis-1,2-Dichloroethene 0.21
trans-1,2-Dichloroethene 0.029 J
Vinyl Chloride 0.33 D
1,1-Dichloroethene 0.014 J
Benzene 0.0014 J
Toluene 0.0086 J
Ethylbenzene 0.0053 J
m,p-Xylene 0.0036 J
o-Xylene 0.0015 J
Xylene (Total) 0.0051 J
Acetone 0.013 J
SB-88
Analyte 6/25/2010
Trichloroethene 0.39 D
cis-1,2-Dichloroethene 0.089 J
trans-1,2-Dichloroethene 0.0019 J
Vinyl Chloride 0.01 J
Toluene 0.0015 J
Acetone 0.0065 J
SB-85
Analyte 6/25/2010
Tetrachloroethene 0.033 J
Trichloroethene 6.4 D
cis-1,2-Dichloroethene 0.13 J
trans-1,2-Dichloroethene 0.011 J
Vinyl Chloride 0.018 J
1,1-Dichloroethene 0.018 J
Benzene 0.0019 J
Toluene 0.0057 J
Ethylbenzene 0.007 J
m,p-Xylene 0.0096 J
o-Xylene 0.0051 J
Xylene (Total) 0.0147 J
1,2,4-Trimethylbenzene 0.0011 J
Acetone 0.0049 J
Carbon disulfide 0.0078 J
SB-86
Analyte 6/25/2010
Trichloroethene 0.02
Toluene 0.02
Vinyl Chloride 0.061
Benzene 0.0013 J
Ethylbenzene 0.0015 J
m,p-Xylene 0.0014 J
Xylene (Total) 0.0014 J
Acetone 0.036 J
BW-21
Analyte 7/26/2017
Trans-1,2-Dichloroethene 0.0101
cis-1,2-Dichloroethene 0.294
Vinyl chloride 0.188
1,1-Dichloroethene 0.00248
Trichloroethene 0.0024
BW-5
Analyte 7/27/2017
Trichloroethene 0.398
Vinyl chloride 0.0935
MW-11
Analyte 11/1/2012
Trichloroethene 0.0029 J
Chloroform 0.0013 J
2-Butanone 0.0025 J
Acetone 0.012
Carbon disulfide 0.0017 J
SB-83
Analyte 6/25/2010
Trichloroethene 0.0011 J
Toluene 0.0012 J
Acetone 0.0046 J
SB-97
Analyte 9/22/2010
Toluene 0.0012 J
Acetone 0.0014
SB-97
Analyte 9/22/2010
Chloromethane 0.0029
Toluene 0.00059 J
SB-108
Analyte 10/5/2010
Trichloroethene 0.3
cis-1,2-Dichloroethene 0.054 J
SB-108
Analyte 10/4/2010
Trichloroethene 3.8 D
cis-1,2-Dichloroethene 0.091 D
trans-1,2-Dichloroethene 0.012
Vinylchloride 0.001 J
1,1-Dichloroethene 0.0029
Benzene 0.001 J
Toluene 0.0012
m,p-Xylene 0.002 J
Acetone 0.035
SB-112
Analyte 10/5/2010
Trichloroethene 0.32 E
cis-1,2-Dichloroethene 0.0069
SB-120
Analyte 10/7/2010
Trichloroethene 0.34
cis-1,2-Dichloroethene 0.052
Toluene 0.0075 J
SB-115
Analyte 10/7/2010
Trichloroethene 0.27
cis-1,2-Dichloroethene 0.002
Toluene 0.024
m,p-Xylene 0.0017 J
o-Xylene 0.001 J
SB-117
Analyte 10/7/2010
Trichloroethene 0.012
Toluene 0.052
Ethylbenzene 0.00056 J
m,p-Xylene 0.0023
o-Xylene 0.001 J
SB-116
Analyte 10/7/2010
Trichloroethene 0.023
Toluene 0.004
SB-84
Analyte 6/25/2010
Trichloroethene 0.0024 J
cis-1,2-Dichloroethene 0.0014 J
Benzene 0.0013 J
Ethylbenzene 0.0025 J
Acetone 0.011 J
Methyl ethyl ketone 0.0035 J
BW-3
Analyte 9/15/2010 10/30/2012 10/30/12 DUP
Trichloroethene 0.0037 J 0.0032 J 0.0025 J
cis-1,2-Dichloroethene 0.041 0.0073 0.006
Vinyl Chloride 0.011 0.0015 0.001
1,1-Dichloroethene 0.0027 J 0.0019 J 0.0016 J
Chloroethane ND 0.0032 J ND
Benzene 0.0027 J 0.00019 J 0.0016 J
SB-122
Analyte 10/7/2010
Trichloroethene 13 D
cis-1,2-Dichloroethene 0.13 D
trans-1,2-Dichloroethene 0.0082 J
SB-109
Analyte 10/4/2010
Trichloroethene 3.4 D
cis-1,2-Dichloroethene 0.25 D
trans-1,2-Dichloroethene 0.0037
Vinylchloride 0.0016
1,1-Dichloroethene 0.001 J
Benzene 0.0022
Toluene 0.0016 J
m,p-Xylene 0.001 J
o-Xylene
SB-121
Analyte 10/7/2010
Trichloroethene 0.81
cis-1,2-Dichloroethene 0.088
trans-1,2-Dichloroethene 0.0062 0.J
Toluene 0.0093 0.J
MW-3/SB-9
Analyte 9/14/2010
Trichloroethene 0.023
cis-1,2-Dichloroethene 0.0029 J
SB-95
Analyte 10/7/2010
Toluene 0.0071
Trichloroethene 0.31
cis-1,2-Dichloroethene 0.16
trans-1,2-Dichloroethene 0.0044 J
Bw-4
Analyte 7/26/2017
Trichloroethene 0.184
cis-1,2-Dichloroethene 2.670
trans-1,2-Dichloroethene 0.0670
Vinyl Ichloride 1.160
1,1-Dichloroethene 0.0167
Benzene 0.00123 J
Ethylbenzene 1.16
BW-11
Analyte 6/26/2017
Trichloroethene 0.0017
Vinyl chloride 0.0396
cis-1,2-Dichloroethene 0.140
Acetone 0.105
SB-14
Analyte 3/24/2010
Trichloroethene 0.023
cis-1,2-Dichloroethene 0.023
Vinyl Chloride 0.0034 J
Chloromethane 0.0015 J
SG-1
Analyte 6/24/2010
Trichloroethene 1.6 D
cis-1,2-Dichloroethene 0.18 D
trans-1,2-Dichloroethene 0.0087
1,1-Dichloroethene 0.0012 J
Toluene 0.0016 J
m,p-Xylene 0.0013 J
Xylene (Total) 0.0013 J
BW-8
Analyte 9/14/2017
Non-Detect
SB-94
Analyte 9/23/2010
Trichloroethene 2 D
m,p-Xylene 0.0011 J
cis-1,2-Dichloroethene 0.0092
Toluene 0.001 J
Benzene 0.0012
MW-12
Analyte 9/14/2017
Trichloroethene 0.0115
cis-1,2-Dichloroethene 0.0128
BW-13
Sample Interval (FT BGS) 26.8-31.8 / 32-32 / 33.8-36.8 / 37-37
Analyte 5/15/2012 5/16/2012 5/16/2012 11/1/2012
Trichloroethene 0.0027 0.0014 J 0.00287 0.0033 J
Chloroform 0.0066 0.0057 J 0.0181 0.0044 J
Acetone ND ND 0.0257 0.0110
Carbon disulfide ND ND ND 0.0080
Benzene 0.00104 0.00077 0.00121 ND
Toluene 0.0144 0.0772 0.00538 ND
Ethylbenzene ND ND 0.00278 0.0014 J
m,p-Xylene 0.0026 0.0079 0.0028 0.0012 J
o-Xylene ND ND 0.0028 0.0012 J
Xylene (Total) 0.0073 0.0070 0.0113 0.0050 J
1,2,4-Trimethylbenzene NA ND NA 0.0011 J
SB-15
Analyte 3/24/2010
Trichloroethene 0.0047 J
Trichloroethene 0.018
cis-1,2-Dichloroethene 0.0098
Vinyl Chloride 0.0012 J
Chloroform 0.0014 J
Toluene 0.0012 J
m,p-Xylene 0.0026 J
Xylene (Total) 0.0026 J
BW-7
Analyte 7/26/2017
Trichloroethene 0.0147
cis-1,2-Dichloroethene 0.00784
BW-20
Analyte 7/26/2017
Trichloroethene 0.0168
cis-1,2-Dichloroethene 25.600
trans-1,2-Dichloroethene 0.222
Vinyl chloride 7.240
1,1-Dichloroethene 0.176
BW-6
Analyte 7/26/2017
Trichloroethene 0.162
cis-1,2-Dichloroethene 0.396
trans-1,2-Dichloroethene 0.0127
Vinyl Ichloride 0.0182
1,1-Dichloroethene 0.00186
1,2-Dichloroethene 0.00357 J
Ethylbenzene 1.16
BW-19
Analyte 7/26/2017
Trichloroethene 1.290
cis-1,2-Dichloroethene 3.100
trans-1,2-Dichloroethene 0.0197
Vinyl chloride 0.00396
1,1-Dichloroethene 0.0131
1,1-Dichloroethene 0.00142
SB-118
Analyte 10/7/2010
Trichloroethene 0.047
cis-1,2-Dichloroethene 0.0024
Toluene 0.012
Ethylbenzene 0.0013 J
m,p-Xylene 0.0024
o-Xylene 0.0011 J
SB-113
Analyte 10/7/2010
Trichloroethene 4.8 D
cis-1,2-Dichloroethene 0.1
trans-1,2-Dichloroethene 0.005
1,1-Dichloroethene 0.0018 J
Toluene 0.019
Ethylbenzene 0.0012 J
m,p-Xylene 0.0047
o-Xylene 0.0019 J
2-Butanone 0.025 J
SB-110
Analyte 10/4/2010
Trichloroethene 0.32 D
cis-1,2-Dichloroethene 0.012
1,1-Dichloroethene 0.001 J
Toluene 0.0013
SB-106
Analyte 10/7/2010
Trichloroethene 0.13
cis-1,2-Dichloroethene 0.0067
trans-1,2-Dichloroethene 0.012
Toluene 0.0077 J
SB-106
Analyte 9/23/2010
Trichloroethene 0.292
cis-1,2-Dichloroethene 0.0021 J
1,1-Dichloroethene 0.0021 J
Benzene 0.0011 J
Toluene 0.0013 J
m,p-Xylene 0.0013 J
Xylene (Total) 0.0013 J
Acetone 0.0083
SB-111
Analyte 10/4/2010
Trichloroethene 0.092
cis-1,2-Dichloroethene 0.0024
SB-123
Analyte 10/7/2010
Trichloroethene 0.018
cis-1,2-Dichloroethene 0.0023 J
m,p-Xylene 0.0027 J
o-Xylene 0.00088 J
SB-114
Analyte 10/7/2010
Trichloroethene 0.0047
cis-1,2-Dichloroethene 0.0042 J
trans-1,2-Dichloroethene 0.0011 J
Toluene 0.021
m,p-Xylene 0.002 J
MW-13
Analyte 9/14/2017
Trichloroethene 0.0109
cis-1,2-Dichloroethene 0.0412
trans-1,2-Dichloroethene 0.0039
MW-7A
Analyte 9/14/2017
cis-1,2-dichloroethene 0.0999
Trichloroethene 0.109
MW-08
Analyte 11/5/2012
Trichloroethene 0.029
SB-97
Analyte 9/22/2010
Trichloroethene 0.001 J
cis-1,2-Dichloroethene 0.002 J
Acetone 0.0061
SB-76
Analyte 3/24/2010
Benzene 0.19
Toluene 0.058 J
Ethylbenzene 2.2 D
m,p-Xylene 11 D
o-Xylene 0.84
Xylene (Total) 12
1,2,4-Trimethylbenzene 0.073 J
1,3,5-Trimethylbenzene 0.039 J
Isopropylbenzene 0.046 J
n-Propylbenzene 0.021 J
Naphthalene 0.12
CONCRETE SIDEWALK
CURRENT F.A.S.T ASSEMBLY SHOP AREA
BUILDING 16
FLOOR DRAINS
LOADING AREA
CONCRETE SIDEWALK
LOWELL STREET
CURRENT CONTOUR RESTORATION AREA
BUILDING 14A
PAINT BOOTH
BUILDING 14B
CITY OF ROCHESTER SCHOOL DISTRICT
BUILDING COLUMN (TYP.)
CONCRETE SIDEWALK
ST. PA
SV-1 & AMB-1
SV-2 & AMB-2
SV-3 & AMB-3
SV-4 & AMB-4
SV-5 & AMB-5
SV-6 & AMB-6
SV-7 & AMB-7
SV-8 & AMB-8
MW-4/SB-11
MW-5/SB-12A
MW-6/SB-12B
MW-7R
MW-7A/SB-12C
MW-8/SB-12A
MW-9/SB-12D
MW-10
MW-11
MW-12
MW-13
SG-1
SG-2
SG-3
SG-4
SG-5
SG-6
SB-1
SB-2
SB-3
SB-4
SB-5
SB-6
SB-7
SB-8
SB-9
SB-10
SB-11
SB-12
SB-13
SB-14
SB-15
SB-16
SB-17
SB-18
SB-19
SB-20
SB-21
SB-22
SB-23
SB-24
SB-25
SB-26
SB-27
SB-28
SB-29
SB-30
SB-31
SB-32
SB-33
SB-34
SB-35
SB-36
SB-37
SB-38
SB-39
SB-40

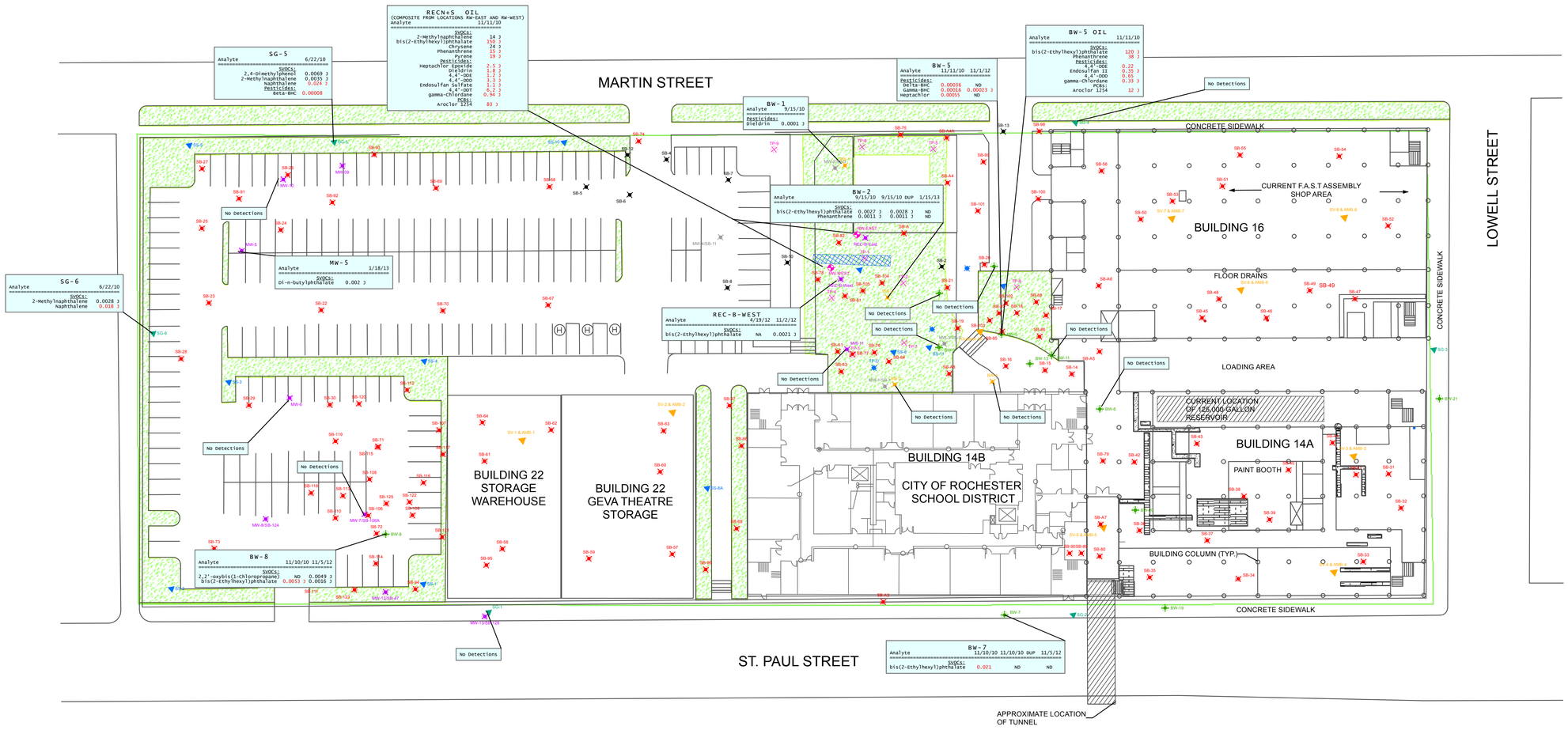

LEGEND

- COMPLETED BCP SEDIMENT SAMPLE
- COMPLETED BCP SOIL BORING
- COMPLETED BCP OVERBURDEN WELLS
- COMPLETED BCP BEDROCK WELLS
- COMPLETED BCP TEST PITS
- COMPLETED BCP SOIL GAS SAMPLE
- COMPLETED BCP SOIL VAPOR SAMPLE
- COMPLETED BCP SURFACE SOIL SAMPLE
- COMPLETED PRE-BCP OVERBURDEN WELL
- COMPLETED PRE-BCP SOIL BORING
- COMPLETED PRE-BCP BEDROCK WELLS
- COMPLETED PRE-BCP PHASE II TEST PIT
- FLOOR DRAIN
- WATER FILLED PIPE IN FLOOR
- TUNNEL
- UNEXCAVATED AREA
- BCP BOUNDARY
- CONCRETE FILLED FLOOR TRENCH (POSSIBLE FORMER PIPE CHASE)
- OPEN FLOOR TRENCH (POSSIBLE PIPE CHASE)
- GRASS COVERED MEDIAN
- STAIRWAY

Note:
(1) SITE PLAN DEVELOPED FROM BERO ASSOCIATES ARCHITECTS SITE PLAN FOR 690 SAINT PAUL STREET, ROCHESTER CHARTER SCHOOL SCIENCE AND TECHNOLOGY, DATED APRIL 11, 2000.
(2) All values reported in mg/L.
(3) **Red bold** values exceed NYSDEC TOGS 1.1.1.

Path: \\PROJECTS1\ProjectsAM\Genesee Valley Real Estate Co\209280 - 690 St Paul Remedial Invest\Drawings\SMP\Fig 7H WaterSVOAsETC.mxd

LABELLA Associates, D.P.C.
300 STATE STREET
ROCHESTER, NY 14614
P: (585) 454-6110
F: (585) 454-3066
www.labellapc.com
COPYRIGHT 2003

DETECTED SEMI-VOLATILE ORGANIC COMPOUNDS, PESTICIDES, AND POLYCHLORINATED BIPHENYLS IN WATER SAMPLES

SITE MANAGEMENT PLAN

BROWNFIELD CLEANUP PROGRAM

690 SAINT PAUL STREET ROCHESTER, NEW YORK

VOLUNTEER: GENESEE VALLEY REAL ESTATE COMPANY

STATE OF NEW YORK
DANIEL P. WOLL
No. 091599
LICENSED PROFESSIONAL ENGINEER

It is a violation of New York Education Law Article 145 Sec.7209, for any person, unless acting under the direction of a licensed architect, professional engineer, or land surveyor, to alter an item in any way. If an item bearing the seal of an architect, engineer, or land surveyor is altered; the altering architect, engineer, or land surveyor shall affix to the item their seal and notation "altered by" followed by their signature and date of such alteration, and a specific description of the alteration.

N E W S

0 35 Feet

1 inch = 35 feet

INTENDED TO PRINT ANSI D

DATE; 7/31/2017

209280

FIGURE 7H

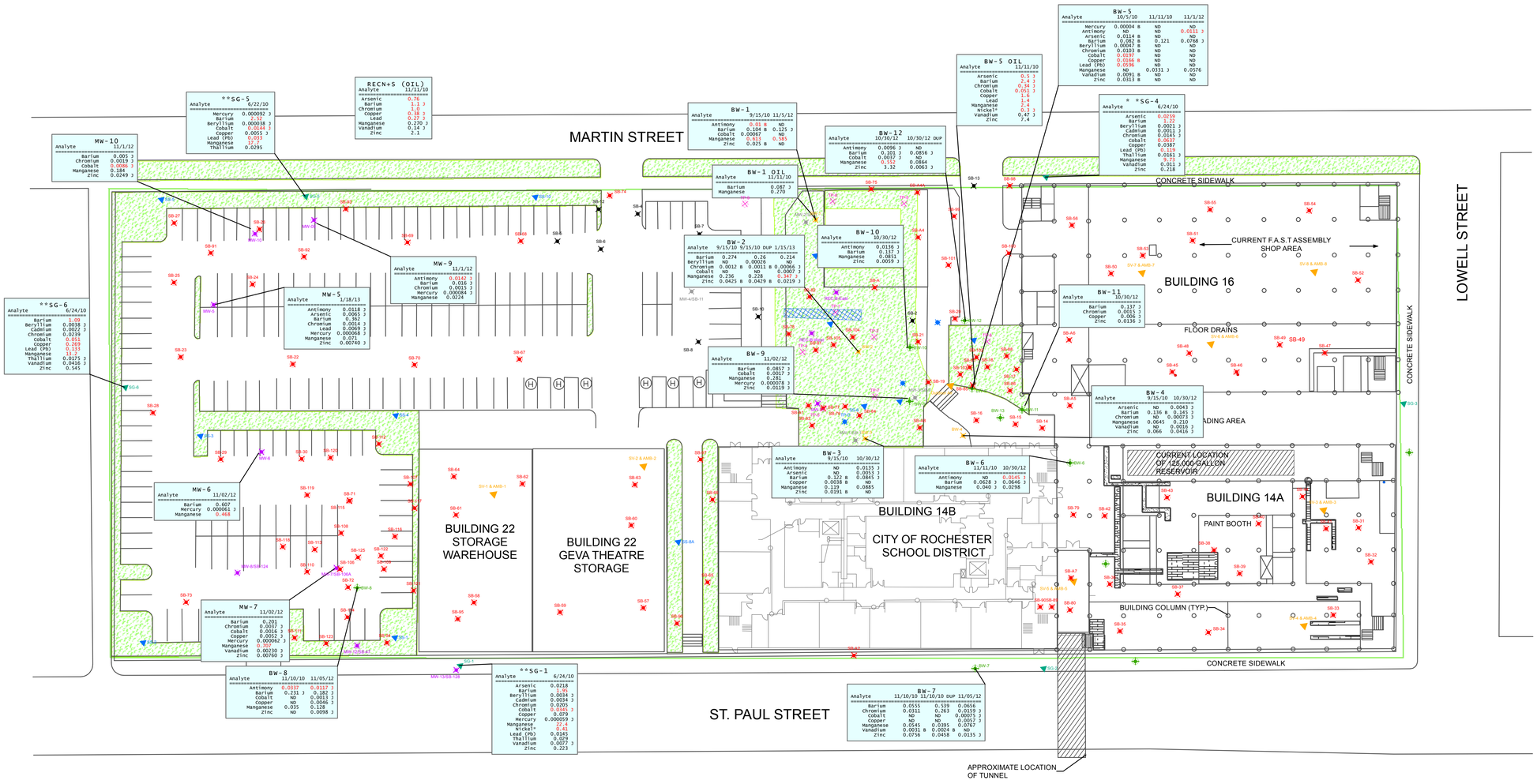

LEGEND

- COMPLETED BCP SOIL BORING
- COMPLETED BCP OVERBURDEN WELLS
- COMPLETED BCP BEDROCK WELLS
- COMPLETED BCP TEST PITS
- COMPLETED BCP SOIL GAS SAMPLE
- COMPLETED BCP SOIL VAPOR SAMPLE
- COMPLETED BCP SURFACE SOIL SAMPLE
- COMPLETED PRE-BCP OVERBURDEN WELL
- COMPLETED PRE-BCP SOIL BORING
- COMPLETED PRE-BCP BEDROCK WELLS
- COMPLETED PRE-BCP PHASE II TEST PIT
- FLOOR DRAIN
- WATER FILLED PIPE IN FLOOR
- TUNNEL
- UNEXCAVATED AREA
- BCP BOUNDARY
- CONCRETE FILLED FLOOR TRENCH (POSSIBLE FORMER PIPE CHASE)
- OPEN FLOOR TRENCH (POSSIBLE PIPE CHASE)
- GRASS COVERED MEDIAN
- STAIRWAY

Note:
(1) SITE PLAN DEVELOPED FROM BERO ASSOCIATES ARCHITECTS SITE PLAN FOR 690 SAINT PAUL STREET, ROCHESTER CHARTER SCHOOL SCIENCE AND TECHNOLOGY, DATED APRIL 11, 2000.
(2) All values reported in mg/L.
(3) **Red bold** values exceed NYSDEC TOGS 1.1.1.
4) Metals shown in callouts include Antimony, Arsenic, Barium, Beryllium, Cadmium, Chromium, Cobalt, Copper, Lead, Mercury, Manganese, Selenium, Silver, Thallium, Vanadium, and Zinc. Metals that were identified at concentrations above Part 703 or TOGS 1.1.1 Groundwater Standards/Guidance Values but are not displayed in the above callouts include aluminum, calcium, iron, magnesium, potassium and sodium. Data for these metals are summarized in Tables 4C and 7C and in Table A to the right. It should be noted that Groundwater Standards/Guidance Values are not currently available for calcium and potassium.
5) * Indicates that the listed parameter is not included in the Select Metals list, but was listed for this sample because the result exceeded NYSDEC TOGS 1.1.1.
6) **Indicates sample collected via SP-15 method, not low flow sampling.

TABLE A

COMPOUND	EXCEEDS STANDARD/GUIDANCE VALUE IN BELOW SAMPLES										
Aluminum	BW-01 Oil (11/11/10)	REC-N+S Oil (11/11/10)	BW-02 & Dup (09/15/10)	BW-02 (1/15/13)	BW-05 (Oil) (11/11/10)	BW-04 (10/30/12)	MW-06 (11/02/12)	MW-07 (11/02/12)	MW-10 (11/01/12)	MW-08 (11/05/12)	MW-05 (1/18/13)
Magnesium	BW-01 (9/15/10)	BW-08 (11/10/10)	MW-06 (11/02/12)	MW-07 (11/02/12)	MW-09 (11/01/12)						
COMPOUND	EXCEEDS STANDARD/GUIDANCE VALUE IN *ALL BUT* BELOW SAMPLES										
Iron	BW-01 (9/15/10)	BW-01 (11/5/12)	BW-06 (11/11/10)	BW-11 (10/30/12)	MW-06 (11/02/12)	MW-09 (11/01/12)					
Sodium	BW-01 (11/5/12)	BW-05 (Oil) (11/11/10)									

LABELLA Associates, D.P.C.
300 STATE STREET
ROCHESTER, NY 14614
P: (585) 454-6110
F: (585)454-3066
www.labellapc.com
COPYRIGHT 2023

DETECTED METALS IN WATER SAMPLES

SITE MANAGEMENT PLAN

BROWNFIELD CLEANUP PROGRAM

690 SAINT PAUL STREET ROCHESTER, NEW YORK

VOLUNTEER: GENESEE VALLEY REAL ESTATE COMPANY

STATE OF NEW YORK
DANIEL P. ROLL
No. 091668
LICENSED PROFESSIONAL ENGINEER

It is a violation of New York Education Law Article 145 Sec.7209, for any person, unless acting under the direction of a licensed architect, professional engineer, or land surveyor, to alter an item in any way. If an item bearing the seal of an architect, engineer, or land surveyor is altered; the altering architect, engineer, or land surveyor shall affix to the item their seal and notation "altered by" followed by their signature and date of such alteration, and a specific description of the alteration.

N E S W

0 35 Feet
1 inch = 35 feet

INTENDED TO PRINT ANSI D

DATE; 7/31/2017

209280

FIGURE 7I

Path: \\PROJECTS1\ProjectsAM\Genesee Valley Real Estate Co\209280 - 690 St Paul Remedial Invest\Drawings\SMP\Fig 7I Remaining Contamination WAterMetalsSelect.mxd

REFER TO FIGURE 10 FOR SOIL COVER SYSTEM ENGINEERING CONTROL FOR ENTIRE SITE

REFER TO FIGURE 8B FOR LNAPL RECOVERY SYSTEM

MARTIN STREET

LOWELL STREET

ST. PAUL STREET

CONCRETE SIDEWALK

CURRENT F.A.S.T ASSEMBLY SHOP AREA

BUILDING 16

CONCRETE SIDEWALK

LOADING AREA

CURRENT LOCATION OF 125,000-GALLON RESERVOIR

BUILDING 14A

PAINT BOOTH

BUILDING 14B

CITY OF ROCHESTER SCHOOL DISTRICT

BUILDING COLUMN (TYP.)

CONCRETE SIDEWALK

TRENCH 1

TRENCH 2

TRENCH 3

TRENCH 4

TRENCH 5

BUILDING 22 STORAGE WAREHOUSE

BUILDING 22 GEVA THEATRE STORAGE

AOC #8 REMEDIAL TRENCH EXCAVATION AND INJECTION PIPING INSTALLATION

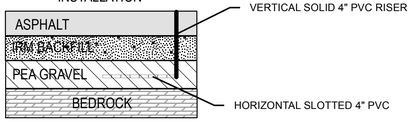

AOC #1 REMEDIAL TRENCH EXCAVATION AND INJECTION PIPING INSTALLATION

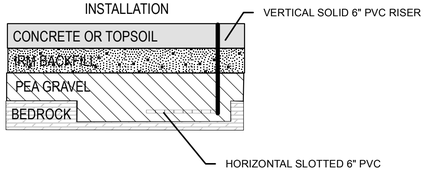

LEGEND

- 6" Riser Pipe - Installed to Grade with Flush Mount
- 4" VERTICAL RISER PIPE - INSTALLED TO GRADE
- 6" Slotted PVC Pipe
- AOC 8 Remedial Trench
- SSDS AOC 1
- Primary Excavation (about 2.0-feet into rock)
- Test Pit (about 2.5-feet into rock)
- Secondary Excavation (about 3.0-feet into rock)
- Secondary Excavation (about 4.9-feet into rock)
- Approximate GWE&T Area
- SSDS AOC 1 Area
- Groundwater Pump and Treat System
- CONCRETE FILLED FLOOR TRENCH (POSSIBLE FORMER PIPE CHASE)
- OPEN FLOOR TRENCH (POSSIBLE PIPE CHASE)
- GRASS COVERED MEDIAN
- STAIRWAY
- BCP BOUNDARY

Note:
(1) SITE PLAN DEVELOPED FROM BERO ASSOCIATES ARCHITECTS SITE PLAN FOR 690 SAINT PAUL STREET, ROCHESTER CHARTER SCHOOL SCIENCE AND TECHNOLOGY, DATED APRIL 11, 2000. LOCATIONS OF VEGETATED AREAS, CONCRETE, ETC. ARE CONSIDERED APPROXIMATE.

Path: \\PROJECTS1\ProjectsAM\Genesee Valley Real Estate Co\209280 - 690 St Paul Remedial Invest\Drawings\SMP\Fig 8A - EC Locations.mxd

LABELLA Associates, D.P.C.
ENGINEERS | PLANNERS | SCIENTISTS
ROCHESTER, NY 14614
P: (585) 454-6110
F: (585)454-3066
www.labellapc.com
COPYRIGHT 2003

Engineering Control (EC) Locations

SITE MANAGEMENT PLAN

BROWNFIELD CLEANUP PROGRAM

690 SAINT PAUL STREET ROCHESTER, NEW YORK

VOLUNTEER: GENESEE VALLEY REAL ESTATE COMPANY

STATE OF NEW YORK
DANIEL P. HOLL
No. 091656
LICENSED PROFESSIONAL ENGINEER

It is a violation of New York Education Law Article 145 Sec.7209, for any person, unless acting under the direction of a licensed architect, professional engineer, or land surveyor, to alter an item in any way. If an item bearing the seal of an architect, engineer, or land surveyor is altered; the altering architect, engineer, or land surveyor shall affix to the item their seal and notation "altered by" followed by their signature and date of such alteration, and a specific description of the alteration.

0 30 60 Feet

1 inch = 30 feet

INTENDED TO PRINT ANSI D

DATE; 7/31/2017

209280

FIGURE 8A

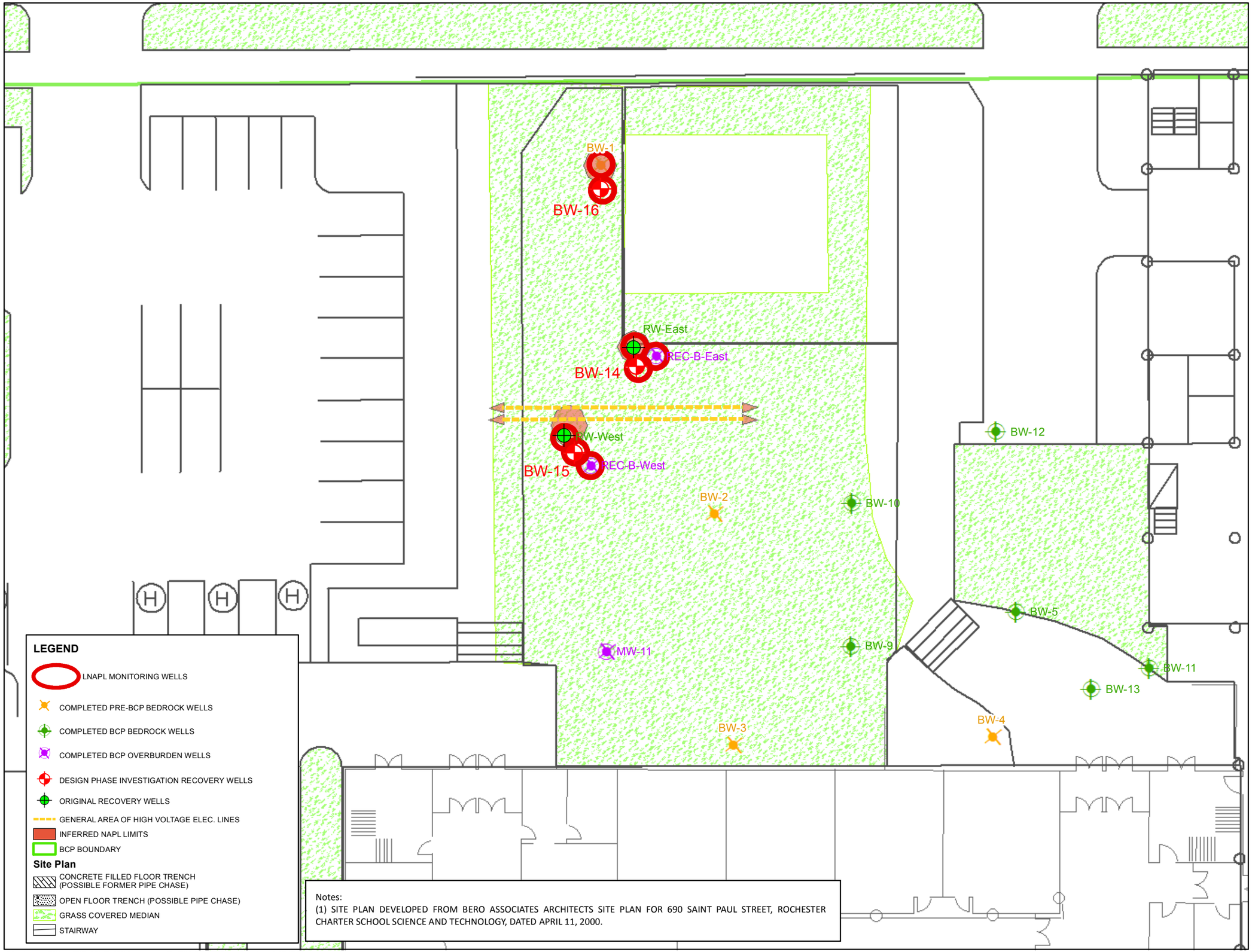

LEGEND

- LNAPL MONITORING WELLS
- COMPLETED PRE-BCP BEDROCK WELLS
- COMPLETED BCP BEDROCK WELLS
- COMPLETED BCP OVERBURDEN WELLS
- DESIGN PHASE INVESTIGATION RECOVERY WELLS
- ORIGINAL RECOVERY WELLS
- GENERAL AREA OF HIGH VOLTAGE ELEC. LINES
- INFERRED NAPL LIMITS
- BCP BOUNDARY

Site Plan

- CONCRETE FILLED FLOOR TRENCH (POSSIBLE FORMER PIPE CHASE)
- OPEN FLOOR TRENCH (POSSIBLE PIPE CHASE)
- GRASS COVERED MEDIAN
- STAIRWAY

Notes:
(1) SITE PLAN DEVELOPED FROM BERO ASSOCIATES ARCHITECTS SITE PLAN FOR 690 SAINT PAUL STREET, ROCHESTER CHARTER SCHOOL SCIENCE AND TECHNOLOGY, DATED APRIL 11, 2000.

Path: \\PROJECTS1\Projects\AM\Genesee Valley Real Estate Co\209280 - 690 St Paul Remedial Invest\Drawings\SMP\Fig 8B - LNAPL Well locations.mxd

LABELLA Associates, D.P.C.
300 STATE STREET
ROCHESTER, NY 14614
P: (585)454-6110
F: (585)454-3066
www.labellapc.com
COPYRIGHT 2003

ENGINEERING CONTROLS
AOC #6

SITE MANAGEMENT PLAN

BROWNFIELD CLEANUP PROGRAM

690 SAINT PAUL STREET
ROCHESTER, NEW YORK

VOLUNTEER:
GENESEE VALLEY
REAL ESTATE COMPANY

STATE OF NEW YORK
DANIEL P. NOLL
No. 081696
LICENSED PROFESSIONAL ENGINEER

It is a violation of New York Education Law Article 145 Sec.7209, for any person, unless acting under the direction of a licensed architect, professional engineer, or land surveyor, to alter an item in any way. If an item bearing the seal of an architect, engineer, or land surveyor is altered; the altering architect, engineer, or land surveyor shall affix to the item their seal and notation "altered by" followed by their signature and date of such alteration, and a specific description of the alteration.

N E W S

0 5 10 20 Feet

1 inch = 20 feet

Intended to print in 11" x 17" size.

209280

FIGURE 8B

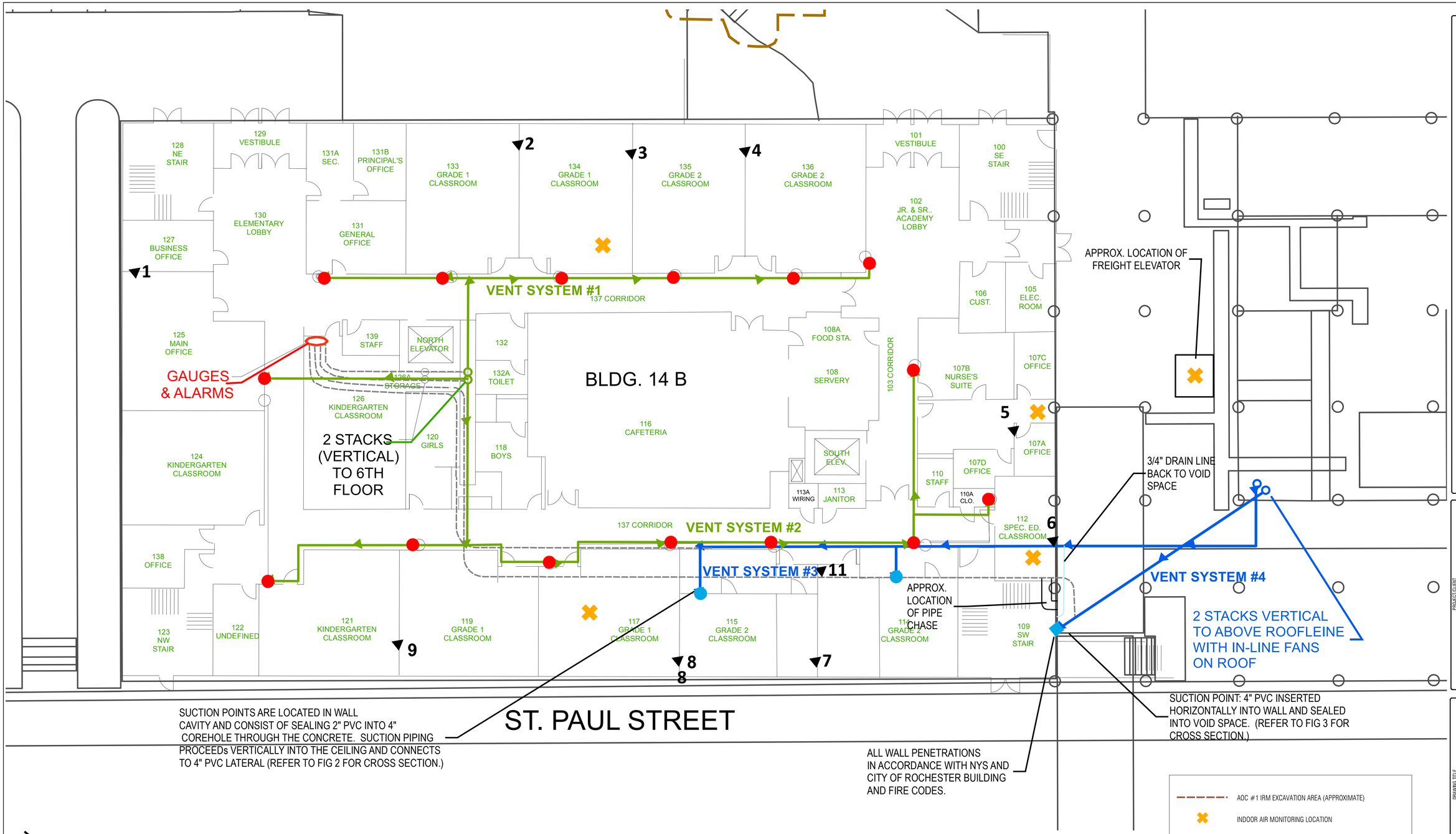

N

0 2.25 4.5 9 13.5 18
APPROXIMATE SCALE (FEET)

10 5 0 10 Feet
I INCH = APPROXIMATELY 10 FET

NOTES:
(1) FLOOR PLAN BASED ON BERO ASSOCIATES ARCHITECTS FIRST FLOOR PLAN FOR 690 SAINT PAUL STREET, ROCHESTER CHARTER SCHOOL SCIENCE AND TECHNOLOGY, DATED APRIL 11, 2000. ACTUAL LAYOUT MAY VARY FROM THAT SHOWN.
(2) EXISTING SUB-SLAB DEPRESSURIZATION SYSTEM INFRASTRUCTURE INSTALLED BY OWNER WITHOUT OVERSIGHT BY ENGINEER. INFORMATION ON INACCESSIBLE/UNOBSERVALBLE PIPING LOCATIONS SUPPLIED BY OWNER. THE ENGINEER DOES NOT ATTEST TO THE ACCURACY OF THIS INFORMATION.

- AOC #1 IRM EXCAVATION AREA (APPROXIMATE)
- INDOOR AIR MONITORING LOCATION
- EXISTING SUCTION POINT - 4" CORE HOLE WITH 2" PVC PIPING (LOCATED WITHIN WALL CAVITIES)
- EXISTING SSDS PIPING - 3" PVC WITH FLOW DIRECTION
- 2012 SUCTION POINT - 4" CORE HOLE WITH 2" PVC PIPING
- 2012 SUCTION POINT - 4" PVC PIPING SEALED INTO WALL
- 2012 SSDS PIPING - 4" PVC WITH FLOW DIRECTION
- SUB-SURFACE PRESSURE MONITORING POINT
- 1/4" POLYETHYLENE TUBING FROM MANOMETERS TO SYSTEM PIPING CONNECTIONS IN 1ST FLOOR CEILING

STATE OF NEW YORK
DANIEL R. ROLL
No. 031578
LICENSED PROFESSIONAL ENGINEER

It is a violation of New York Education Law Article 145 Sec.7209, for any person, unless acting under the direction of a licensed architect, professional engineer, or land surveyor, to alter an item in any way. If an item bearing the seal of an architect, engineer, or land surveyor is altered; the altering architect, engineer, or land surveyor shall affix to the item their seal and notation "altered by" followed by their signature and date of such alteration, and a specific description of the alteration.

LABELLA Associates, D.P.C.
ROCHESTER, NY 14614
P: (585) 454-6110
F: (585) 454-3066
www.labellapc.com
COPYRIGHT 2003

PROJECT/CLIENT
690 SAINT PAUL STREET
BCP SITE #C828159
690 SAINT PAUL STREET
ROCHESTER, NEW YORK
INTENDED TO PRINT ANSI D

DRAWING TITLE
SUB-SLAB VAPOR MITIGATION SYSTEM AND AIR MONITORING LOCATIONS

DESIGNED BY: DPN
DRAWN BY: RCN
REVIEWED BY: DPN
ISSUED FOR: FINAL
DATE: 10/31/2017

PROJECT/DRAWING NUMBER
209280

FIGURE 9

Path: \\PROJECTS1\ProjectsAM\Genesee Valley Real Estate Co\209280 - 690 St Paul Remedial Invest\Drawings\SMP\Fig 9 - SSDS Bldg 14B use.mxd

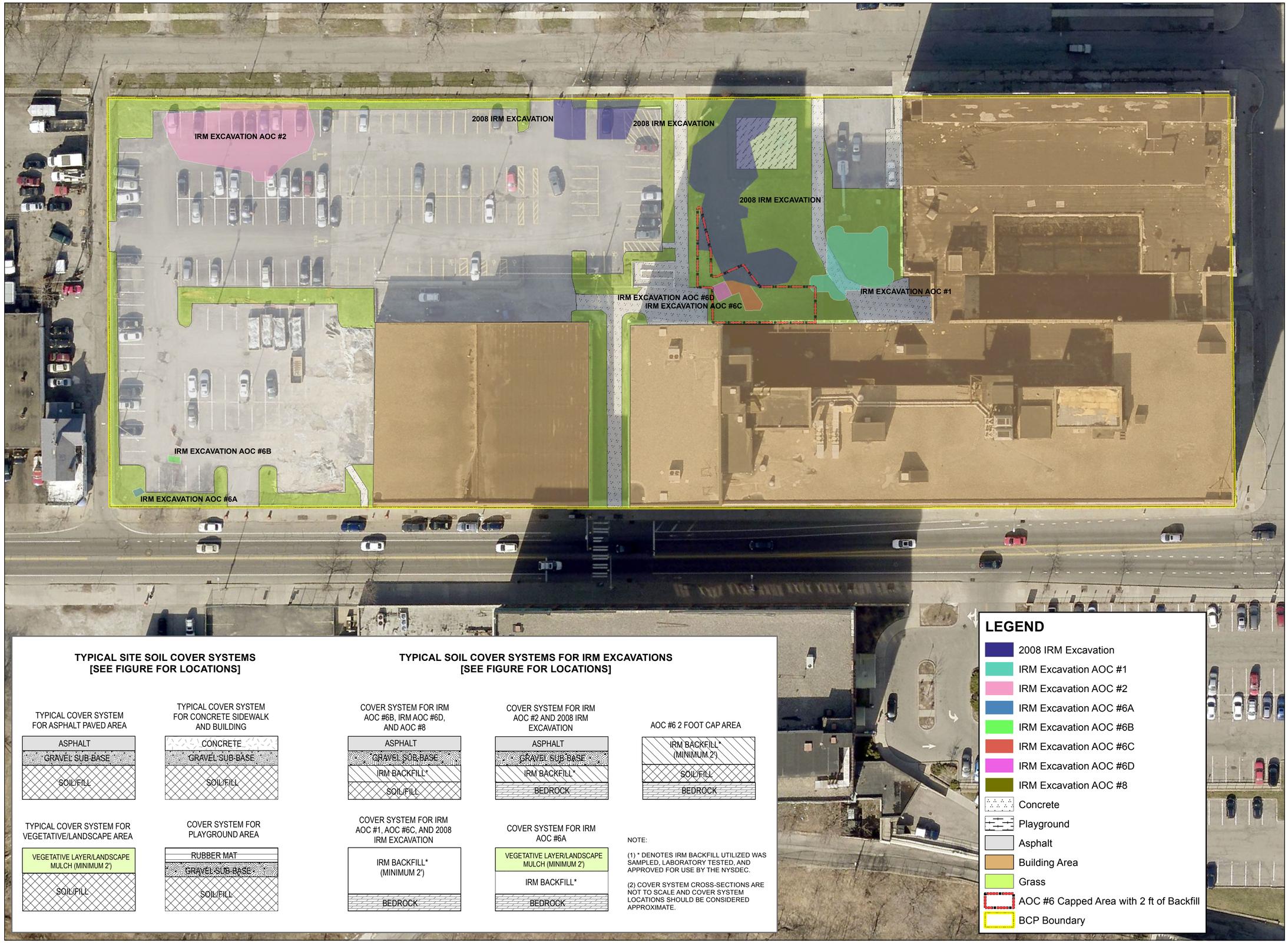

TYPICAL SITE SOIL COVER SYSTEMS [SEE FIGURE FOR LOCATIONS]

TYPICAL COVER SYSTEM FOR ASPHALT PAVED AREA

ASPHALT
GRAVEL SUB-BASE
SOIL/FILL

TYPICAL COVER SYSTEM FOR CONCRETE SIDEWALK AND BUILDING

CONCRETE
GRAVEL SUB-BASE
SOIL/FILL

TYPICAL COVER SYSTEM FOR VEGETATIVE/LANDSCAPE AREA

VEGETATIVE LAYER/LANDSCAPE MULCH (MINIMUM 2')
SOIL/FILL

COVER SYSTEM FOR PLAYGROUND AREA

RUBBER MAT
GRAVEL SUB-BASE
SOIL/FILL

TYPICAL SOIL COVER SYSTEMS FOR IRM EXCAVATIONS [SEE FIGURE FOR LOCATIONS]

COVER SYSTEM FOR IRM AOC #6B, IRM AOC #6D, AND AOC #8

ASPHALT
GRAVEL SUB-BASE
IRM BACKFILL*
SOIL/FILL

COVER SYSTEM FOR IRM AOC #2 AND 2008 IRM EXCAVATION

ASPHALT
GRAVEL SUB-BASE
IRM BACKFILL*
BEDROCK

AOC #6 2 FOOT CAP AREA

IRM BACKFILL* (MINIMUM 2')
SOIL/FILL
BEDROCK

COVER SYSTEM FOR IRM AOC #1, AOC #6C, AND 2008 IRM EXCAVATION

IRM BACKFILL* (MINIMUM 2')
BEDROCK

COVER SYSTEM FOR IRM AOC #6A

VEGETATIVE LAYER/LANDSCAPE MULCH (MINIMUM 2')
IRM BACKFILL*
BEDROCK

NOTE:

(1) * DENOTES IRM BACKFILL UTILIZED WAS SAMPLED, LABORATORY TESTED, AND APPROVED FOR USE BY THE NYSDEC.

(2) COVER SYSTEM CROSS-SECTIONS ARE NOT TO SCALE AND COVER SYSTEM LOCATIONS SHOULD BE CONSIDERED APPROXIMATE.

LEGEND

- 2008 IRM Excavation
- IRM Excavation AOC #1
- IRM Excavation AOC #2
- IRM Excavation AOC #6A
- IRM Excavation AOC #6B
- IRM Excavation AOC #6C
- IRM Excavation AOC #6D
- IRM Excavation AOC #8
- Concrete
- Playground
- Asphalt
- Building Area
- Grass
- AOC #6 Capped Area with 2 ft of Backfill
- BCP Boundary

LABELLA Associates, D.P.C.
300 STATE STREET
ROCHESTER, NY 14614
P: (585) 454-6110
F: (585) 454-3066
www.labellapc.com
COPYRIGHT 2003

ENGINEERING CONTROLS SOIL COVER SYSTEM

SOIL MANAGEMENT PLAN

BROWNFIELD CLEANUP PROGRAM

690 SAINT PAUL STREET ROCHESTER, NEW YORK

VOLUNTEER: GENESEE VALLEY REAL ESTATE COMPANY

STATE OF NEW YORK
DANIEL P. HOLL
No. 081566
LICENSED PROFESSIONAL ENGINEER

It is a violation of New York Education Law Article 145 Sec.7209, for any person, unless acting under the direction of a licensed architect, professional engineer, or land surveyor, to alter an item in any way. If an item bearing the seal of an architect, engineer, or land surveyor is altered, the altering architect, engineer, or land surveyor shall affix to the item their seal and notation "altered by" followed by their signature and date of such alteration, and a specific description of the alteration.

N E W S

0 30 60

1 inch = 30 feet

INTENDED TO BE PRINTED ANSI D

DATE: 7/31/2017

209280

FIGURE 10

Path: \\PROJECTS1\Projects\AM\Genesee Valley Real Estate Co\209280 - 690 St Paul Remedial Invest\Drawings\SMP\Fig 10 - EC Soil Cover System.mxd

BUILDING 16

LOADING AREA

TW-7

Depth	Media	TCE	DCE	Vinyl Chloride
479.74'	Soil	50.9	<1.89	<1.89
474.44'	Soil	0.0175	<0.00859	<0.00859

TW-4

Depth	Media	TCE	DCE	Vinyl Chloride
481.52'-480.52'	Soil	0.432	0.335	0.029

TW-11

Depth	Media	TCE	DCE	Vinyl Chloride
479.26'	Soil	136	3.93	<1.750

TW-12

Depth	Media	TCE	DCE	Vinyl Chloride
483.38'	Soil	7.4	0.51	<0.019
483.28'-482.58'	Rock	6.5	0.68	<0.022
478.98'	Soil	43	1.2	<0.19
478.98'-478.68'	Rock	34	1.9	<0.072
475.08'-474.73'	Rock	0.059	0.95	0.047

EW-2

Depth	Media	TCE	DCE	Vinyl Chloride
479.09'-478.64'	Rock	100	2.4	<0.28
478.74'-478.59'	Soil	130	3.5	<0.35
474.19'-473.84'	Rock	<0.039	0.078	<0.017
469.19'-468.79'	Rock	<0.039	<0.038	<0.017

EW-1A

Depth	Media	TCE	DCE	Vinyl Chloride
479.37'	Soil	54	<0.19	<0.085
479.27'-478.67'	Rock	61	1.1	<0.17
478.57'	Soil	31	<0.49	<0.071
474.27'-473.92'	Rock	<0.039	<0.038	<0.017
470.07'	Soil	0.12	0.015	<0.0003

BW-20

Depth	Media	TCE	DCE	Vinyl Chloride
480.96'	Soil	1.58	0.0782	<0.00522
479.06'	Soil	7.61	0.145	0.00544

EW-3

Depth	Media	TCE	DCE	Vinyl Chloride
479.18'	Soil	12	1.2	<0.038
479.13'-478.83'	Rock	6.8	2.2	0.053
474.18'-473.88'	Rock	<0.039	<0.038	<0.017
470.08'-469.68'	Soil	0.0017	0.0016	<0.00032

TW-7, TW-6, TW-5, TW-4, TW-3A, TW-2, TW-1, TW-11, TW-9A, TW-12, BW-6, TW-10, TW-8, EW-2, EW-1A, BW-20, EW-3, BW-19

PROPOSED SEWER DISCHARGE LOCATION (SANITARY SEWER)

LEGEND

VOC Impacts to Groundwater (From RI Report)

- 9,500-9,752 PPB
- 9,000-9,500 PPB
- 8,000-9,000 PPB (PARTIALLY INTERPRETED)
- 5,000-8,000 PPB
- 2,500-5,000 PPB (PARTIALLY INTERPRETED)
- 1,500-2,500 PPB (PARTIALLY INTERPRETED)
- 25-1,500 PPB (PARTIALLY INTERPRETED)
- 5-25 PPB (PARTIALLY INTERPRETED)
- TREATMENT WELLS
- EXTRACTION WELLS
- BEDROCK WELL
- PROPOSED EFFLUENT PIPING
- PROPOSED EXTRACTION PIPING
- AOC #1 IRM EXCAVATION AREA (APPROX.)
- BCP BOUNDARY

NOTE:

(1) SITE PLAN DEVELOPED FROM BERO ASSOCIATES ARCHITECTS SITE PLAN FOR 690 SAINT PAUL STREET, ROCHESTER CHARTER OF SCHOOL SCIENCE AND TECHNOLOGY, DATED APRIL 11, 2000.
(2) SOIL AND BEDROCK DATA DISPLAYED IN PARTS PER MILLION (PPM). DATA FROM AUGUST 2015. SOIL SAMPLES ANALYZED VIA USEPA METHOD 8260. ROCK CORE SAMPLES INCLUDING CRUSHING ROCK SAMPLE AND EXTRACTION WITH METHANOL VIA USEPA METHOD 5035 AND ANALYSIS BY USEPA METHOD 8260 AFTER TWO WEEKS OF EXTRACTION/PRESERVATION.
(3) UNDERLINED VALUES INDICATE EXCEEDANCE OF NYSDEC PART 375-6 UNRESTRICTED USE SOIL CLEANUP OBJECTIVES.
(4) RED VALUES INDICATE EXCEEDANCE OF NYSDEC PART 375-6 RESTRICTED RESIDENTIAL USE.
(5) < VALUES INDICATE THE ANALYTE WAS NOT DETECTED ABOVE LABORATORY METHOD DETECTION LIMITS.
(6) GROUNDWATER VOC IMPACTS ARE FROM REMEDIAL INVESTIGATION REPORT. KRIGING MODELING COMPLETED USING GOLDEN SOFTWARE SURFER V8. DASHED LINES INDICATE PARTIALLY INTERPRETED CONTOURS DUE TO MODEL DATA LIMITATIONS.
(7) LABELLA SAMPLE LOCATIONS MEASURED VIA A LICENSED SURVEY.
(8) SELECT CHLORINATED VOCS SAMPLE RESULTS ARE DISPLAYED.

Path: \\PROJECTS1\ProjectsAM\Genesee Valley Real Estate Co\209280 - 690 St Paul Remedial Invest\Drawings\SMP\Fig 11A - AOC #1 Soil and Rock Callouts.mxd

LABELLA Associates, D.P.C.
300 STATE STREET
ROCHESTER, NY 14614
P: (585) 454-6110
F: (585)454-3066
www.labellapc.com
COPYRIGHT 2003

SUMMARY OF SOIL AND BEDROCK SAMPLES WITHIN AOC 1

SOIL MANAGEMENT PLAN

BROWNFIELD CLEANUP PROGRAM

690 SAINT PAUL STREET ROCHESTER, NEW YORK

VOLUNTEER: GENESEE VALLEY REAL ESTATE COMPANY

STATE OF NEW YORK DANIEL P. HOLL No. 091516 LICENSED PROFESSIONAL ENGINEER

It is a violation of New York Education Law Article 145 Sec.7209, for any person, unless acting under the direction of a licensed architect, professional engineer, or land surveyor, to alter an item in any way. If an item bearing the seal of an architect, engineer, or land surveyor is altered; the altering architect, engineer, or land surveyor shall affix to the item their seal and notation "altered by" followed by their signature and date of such alteration, and a specific description of the alteration.

N E W S

0 15 30

1 inch = 15 feet

INTENDED TO BE PRINTED ANSI D

DATE: 7/31/2017

209280

FIGURE 11A

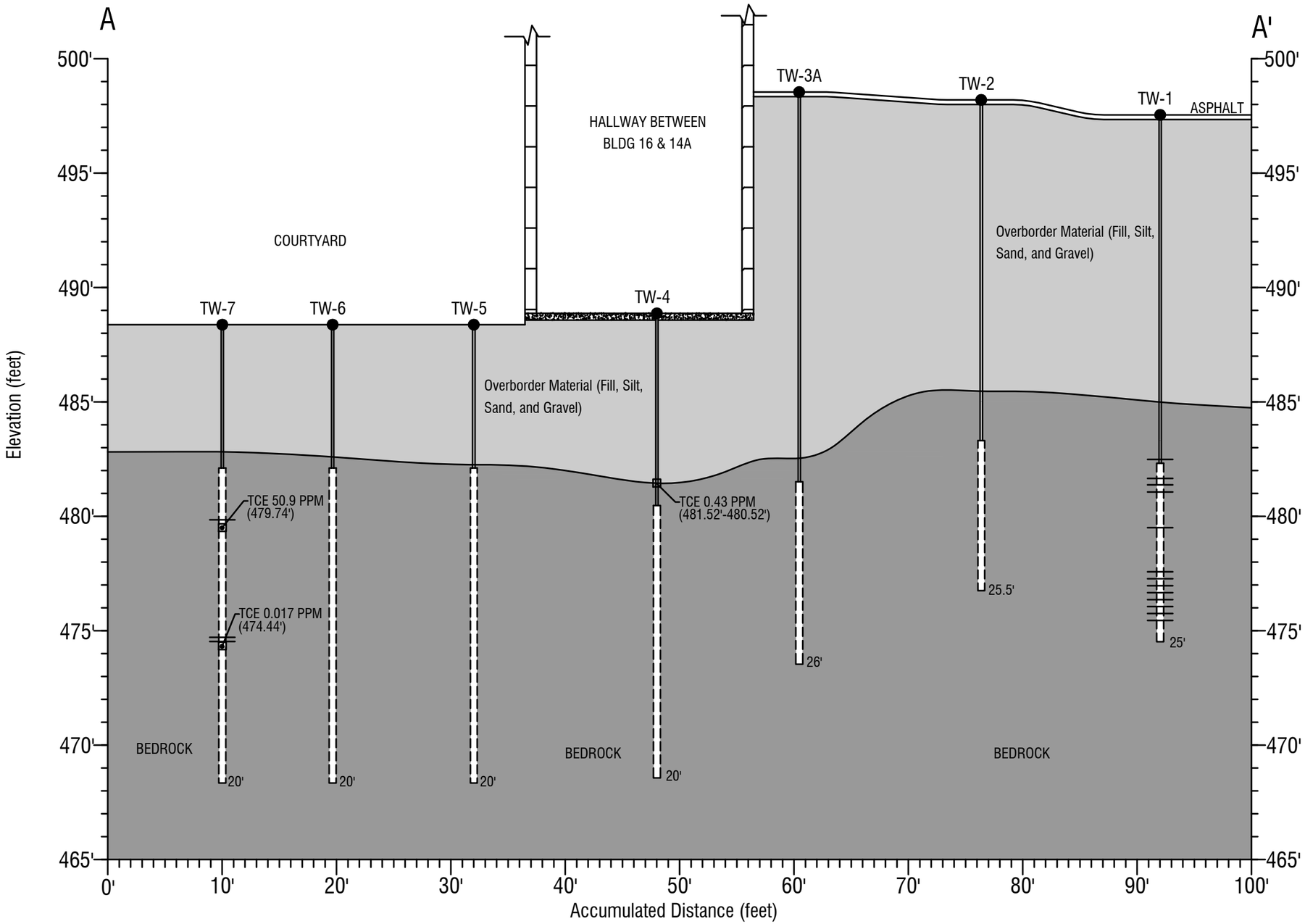

NOTE:

1. Formations based on boring log notes.
2. Subsurface formations inferred between data points, below the terminal depth of borings and beyond the first and last point.
3. Refer to Figure 1 for overview of cross-section and surrounding features.
4. Trichlorothene (TCE) results from soil Sampling by USEPA method 8260. Refer to laboratory reports or data summery tables for complete list of testing data.
5. Rock core sampling included crushing rock sample and extraction with methanol via USEPA method 5035 and analysis via USEPA method 8260 after two weeks of preservation/extraction.

LEGEND

Steel Casing	Soil Boring Location	Soil Sample Location w/ TCE Concentration & Elevation
Open Bedrock Hole (8" Dia.)	30.0' Depth to Boring Bottom	Bedrock Sample Location w/ TCE Concentration & Elevation
Bedrock	Fill Material	
Concrete	Significant Bedrock Fracture	BCP Boundary

LABELLA Associates, D.P.C.
300 STATE STREET
ROCHESTER, NY 14614
P: (585) 454-6110
F: (585) 454-3066
www.labellapc.com

COPYRIGHT © 2004

STATE OF NEW YORK
DANIEL P. NOLL
No. 061696
LICENSED PROFESSIONAL ENGINEER

It is a violation of New York Education Law Article 145 Sec.7209, for any person, unless acting under the direction of a licensed architect, professional engineer, or land surveyor, to alter an item in any way. If an item bearing the seal of an architect, engineer, or land surveyor is altered; the altering architect, engineer, or land surveyor shall affix to the item their seal and notation "altered by" followed by their signature and date of such alteration, and a specific description of the alteration.

PROJECT/CLIENT
REMEDIAL DESIGN EORK PLAN AOC #1
AMENDMENT JANUARY 2016

BROWNFIELD CLEANUP PROGRAM
690 SAINT PAUL STREET
ROCHESTER, NEW YORK

DRAWING TITLE
CONCEPTUAL SITE MODEL: AOC #1
GEOLOGIC CROSS SECTION
A-A'

ISSUED FOR: FINAL
DATE: December 2015
DESIGNED BY: JMG
DRAWN BY: DRP
REVIEWED BY: DN

PROJECT/DRAWING NUMBER
209280

FIGURE 11B

Intended To Be Printed On 11"X17"

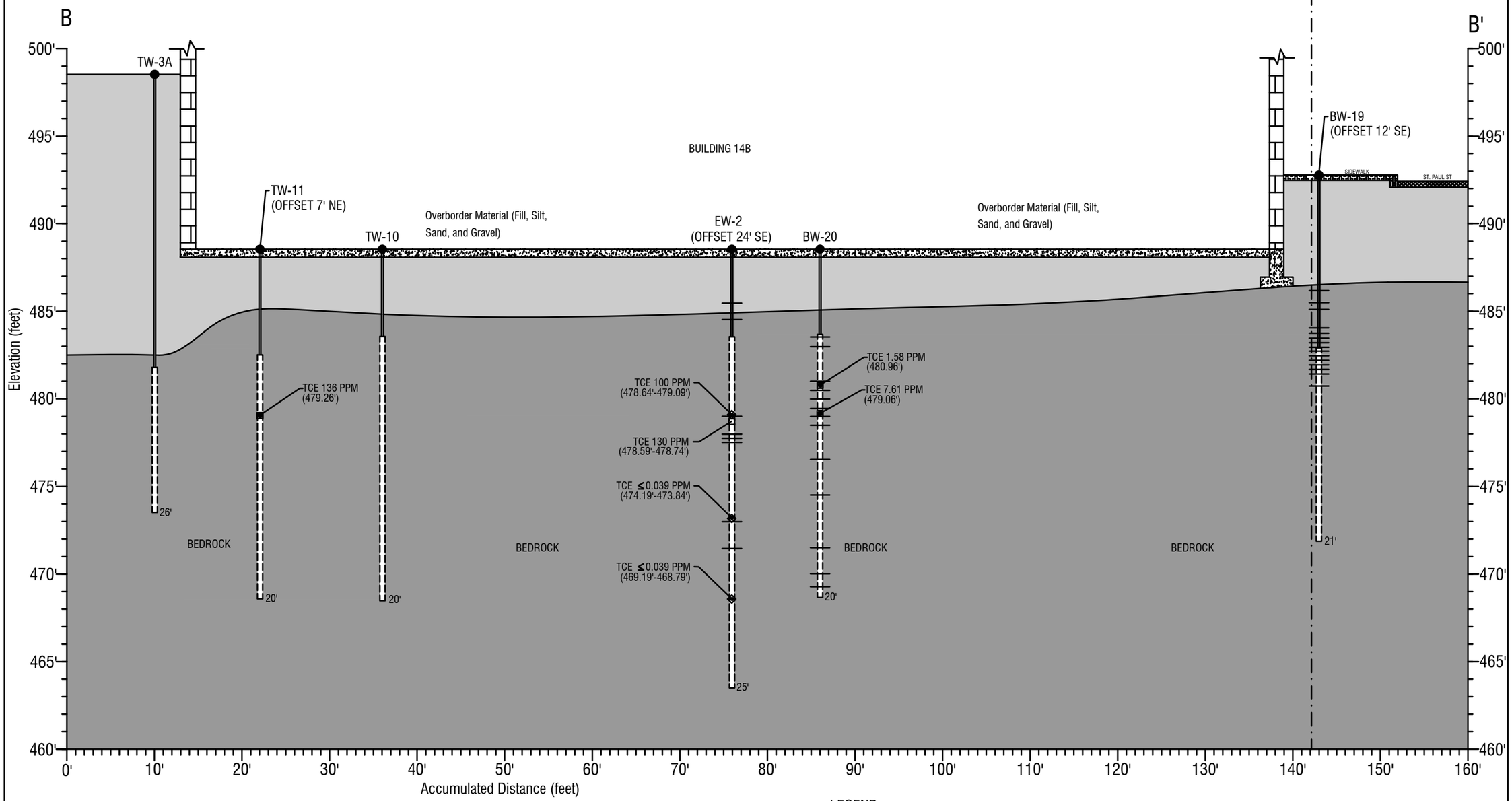

NOTE:

1. Formations based on boring log notes.
2. Subsurface formations inferred between data points, below the terminal depth of borings and beyond the first and last point.
3. Refer to Figure 1 for overview of cross-section and surrounding features.
4. Trichlorothene (TCE) results from soil Sampling by USEPA method 8260. Refer to laboratory reports or data summery tables for complete list of testing data.
5. Rock core sampling included crushing rock sample and extraction with methanol via USEPA method 5035 and analysis via USEPA method 8260 after two weeks of preservation/extraction.

LEGEND

- Steel Casing
- Open Bedrock Hole (8" Dia.)
- Bedrock
- Concrete
- Soil Boring Location
- 30.0' Depth to Boring Bottom
- Fill Material
- Significant Bedrock Fracture
- Soil Sample Location w/ TCE Concentration & Elevation
- Bedrock Sample Location w/ TCE Concentration & Elevation
- BCP Boundary

LABELLA Associates, D.P.C.
300 STATE STREET
ROCHESTER, NY 14614
P: (585) 454-6110
F: (585) 454-3066
www.labellapc.com

copyright © 2004

STATE OF NEW YORK
DANIEL P. NOLL
No. 081666
LICENSED PROFESSIONAL ENGINEER

It is a violation of New York Education Law Article 145 Sec.7209, for any person, unless acting under the direction of a licensed architect, professional engineer, or land surveyor, to alter an item in any way. If an item bearing the seal of an architect, engineer, or land surveyor is altered; the altering architect, engineer, or land surveyor shall affix to the item their seal and notation "altered by" followed by their signature and date of such alteration, and a specific description of the alteration.

PROJECT/CLIENT
REMEDIAL DESIGN EORK PLAN AOC #1
AMENDMENT JANUARY 2016
BROWNFIELD CLEANUP PROGRAM
690 SAINT PAUL STREET
ROCHESTER, NEW YORK

DRAWING TITLE
CONCEPTUAL SITE MODEL: AOC #1
GEOLOGIC CROSS SECTION
B-B'

ISSUED FOR: FINAL
DATE: December 2015
DESIGNED BY: JMG
DRAWN BY: DRP
REVIEWED BY: DN
PROJECTS \Projects\AA\Brownfield Kelly Plaza\Base Co\209280- 690 St Paul Brownfield Drawings.dwg

PROJECT/DRAWING NUMBER
209280
FIGURE 11C

Intended To Be Printed On 11"X17"

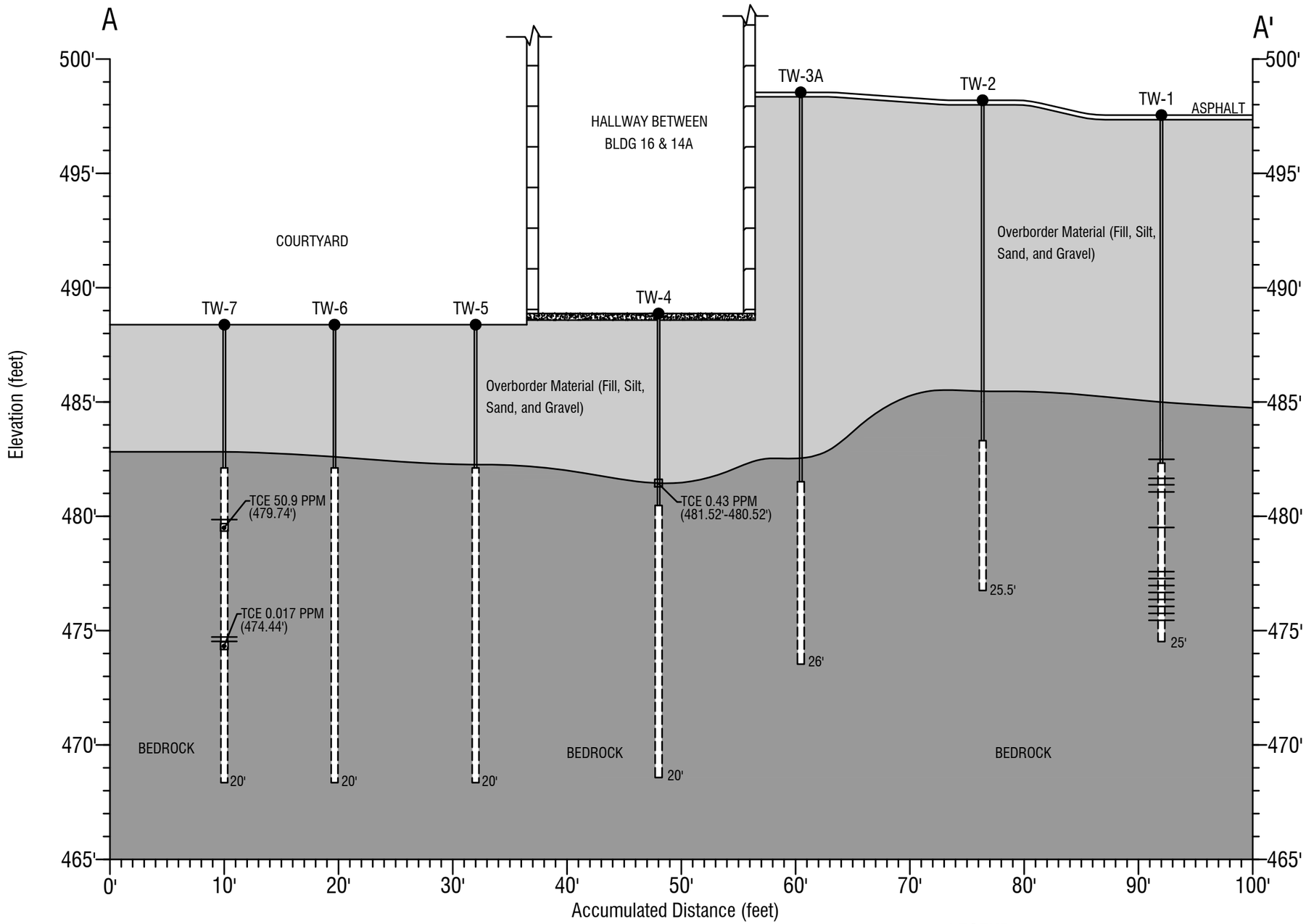

NOTE:

1. Formations based on boring log notes.
2. Subsurface formations inferred between data points, below the terminal depth of borings and beyond the first and last point.
3. Refer to Figure 1 for overview of cross-section and surrounding features.
4. Trichlorothene (TCE) results from soil Sampling by USEPA method 8260. Refer to laboratory reports or data summery tables for complete list of testing data.
5. Rock core sampling included crushing rock sample and extraction with methanol via USEPA method 5035 and analysis via USEPA method 8260 after two weeks of preservation/extraction.

LEGEND

- Steel Casing
- Open Bedrock Hole (8" Dia.)
- Bedrock
- Concrete
- Soil Boring Location
- 30.0' Depth to Boring Bottom
- Fill Material
- Significant Bedrock Fracture
- Soil Sample Location w/ TCE Concentration & Elevation
- Bedrock Sample Location w/ TCE Concentration & Elevation
- BCP Boundary

LABELLA Associates, D.P.C.
300 STATE STREET
ROCHESTER, NY 14614
P: (585) 454-6110
F: (585) 454-3066
www.labellapc.com

copyright © 2004

STATE OF NEW YORK
DANIEL P. NOLL
No. 091656
LICENSED PROFESSIONAL ENGINEER

It is a violation of New York Education Law Article 145 Sec.7209, for any person, unless acting under the direction of a licensed architect, professional engineer, or land surveyor, to alter an item in any way. If an item bearing the seal of an architect, engineer, or land surveyor is altered; the altering architect, engineer, or land surveyor shall affix to the item their seal and notation "altered by" followed by their signature and date of such alteration, and a specific description of the alteration.

PROJECT/CLIENT

REMEDIAL DESIGN EORK PLAN AOC #1
AMENDMENT JANUARY 2016

BROWNFIELD CLEANUP PROGRAM
690 SAINT PAUL STREET
ROCHESTER, NEW YORK

DRAWING TITLE

CONCEPTUAL SITE MODEL: AOC #1
GEOLOGIC CROSS SECTION
C-C'

ISSUED FOR: FINAL
DATE: December 2015
DESIGNED BY: JMG
DRAWN BY: DRP
REVIEWED BY: DN
PROJECTS (Projects)AOC#1 Work Plan Amendment Jan 2016\209280 - 690 St Paul Remedial Amendment Jan 2016.dwg

PROJECT/DRAWING NUMBER

209280

FIGURE 11D

Intended To Be Printed On 11"X17"

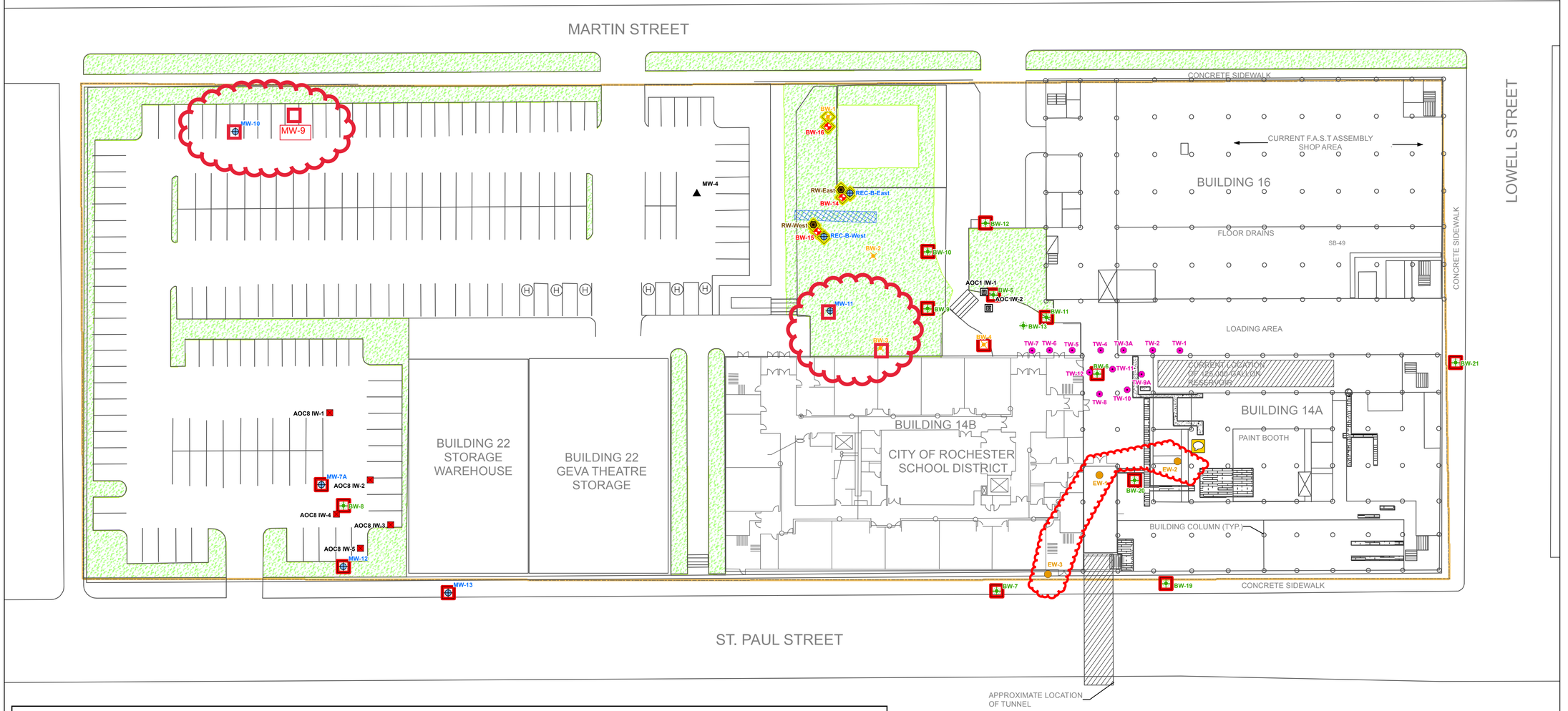

Legend

- PRE-BCP BEDROCK WELL
- BCP OVERBURDEN WELL
- AOC #8 INJECTION WELL/TRENCH
- AOC #1 INJECTION WELL/TRENCH
- ORIGINAL RECOVERY WELL
- DESIGN PHASE INVESTIGATION RECOVERY WELL
- GROUNDWATER EXTRACTION WELL
- GROUNDWATER INJECTION WELL AOC #1
- BCP BEDROCK WELLS
- WELL MONITORED FOR LNAPL (two wells without NAPL will be monitored for groundwater COCs)
- WELL MONITORED FOR GROUNDWATER COCs
- TUNNEL
- BCP BOUNDARY
- CONCRETEfilledTRENCH — *CONCRETE FILLED FLOOR TRENCH (POSSIBLE FORMER PIPE CHASE)*
- OPEN FLOOR TRENCH — *OPEN FLOOR TRENCH (POSSIBLE PIPE CHASE)*
- GRASS — *GRASS COVERED MEDIAN*
- STAIRS — *STAIRWAY*

Note:
(1) SITE PLAN DEVELOPED FROM BERO ASSOCIATES ARCHITECTS SITE PLAN FOR 690 SAINT PAUL STREET, ROCHESTER CHARTER SCHOOL SCIENCE AND TECHNOLOGY, DATED APRIL 11, 2000.
(2) ALL LOCATIONS SHOULD BE CONSIDERED APPROXIMATE.

LABELLA Associates, D.P.C.
300 STATE STREET
ROCHESTER, NY 14614
P: (585) 454-6110
F: (585)454-3066
www.labellapc.com
COPYRIGHT 2003

EXISTING WELLS AND WELLS MONITORED VIA SAMPLING FOR CHEMICAL OF CONCERNS

SITE MANAGEMENT PLAN

BROWNFIELD CLEANUP PROGRAM

690 SAINT PAUL STREET ROCHESTER, NEW YORK

VOLUNTEER: GENESEE VALLEY REAL ESTATE COMPANY



It is a violation of New York Education Law Article 145 Sec.7209, for any person, unless acting under the direction of a licensed architect, professional engineer, or land surveyor, to alter an item in any way. If an item bearing the seal of an architect, engineer, or land surveyor is altered; the altering architect, engineer, or land surveyor shall affix to the item their seal and notation "altered by" followed by their signature and date of such alteration, and a specific description of the alteration.



0 30 Feet

1 inch = 30 feet

INTENDED TO PRINT ANSI D

DATE; 7/31/2017

209280

FIGURE 12

Path: \\PROJECTS1\Projects\AM\Genesee Valley Real Estate Co\209280 - 690 St Paul Remedial Invest\Drawings\SMP\Fig 12 Well Network.mxd

APPENDIX 1

ENVIRONMETNAL EASEMENT

GENESEE VALLEY REAL ESTATE COMPANY, LLC
160 Despatch Drive
East Rochester, NY 14445
585-563-9723

August 13, 2015

Daniel P. Noll, P.E.
LaBella Associates, D.P.C.
300 State Street
Rochester, NY 14614

Re: Environmental Easement

Dear Dan:

Enclosed is a copy of an environmental easement granted to the New York State Department of Environmental Conservation by Genesee Valley Real Estate Company, LLC for property at 690 St. Paul Street, Rochester, NY. The easement was recorded in the Monroe County Clerk's Office on August 6, 2015.

If you have any questions regarding this matter, please do not hesitate to contact me.

Very truly yours,

Dante Gullace

Dante Gullace

Received By
LaBella Associates, P.C.
AUG 17 2015
Client: _____
Proj.#: _____

MONROE COUNTY CLERK'S OFFICE

ROCHESTER, NY

THIS IS NOT A BILL. THIS IS YOUR RECEIPT

Receipt # 1280620

Index DEEDS

Book 11573 Page 369

No. Pages : 12

Instrument EASEMENT WITHOUT A TPS584

Date : 08/06/2015

Time : 10:25:10AM

Control # 201508060241

Ref 1 #

Employee : RachelR

Return To:
DANTE GULLACE ESQ
160 DESPATCH DRIVE
EAST ROCHESTER, NY 14445-

GENESEE VALLEY REAL ESTATE COMPANY LLC
NEW YORK DEPARTMENT OF ENVIRONMENTAL CONSERVATION

GENESEE VALLEY REAL ESTATE COMPANY LLC
NEW YORK DEPARTMENT OF ENVIRONMENTAL CONSERVATION

COUNTY FEE NUMBER PAGES	$	55.00
RECORDING FEE	$	45.00

Total $ 100.00

State of New York

MONROE COUNTY CLERK'S OFFICE

WARNING - THIS SHEET CONSTITUTES THE CLERKS ENDORSEMENT, REQUIRED BY SECTION 317-a(5) & SECTION 319 OF THE REAL PROPERTY LAW OF THE STATE OF NEW YORK. DO NOT DETACH OR REMOVE.

CHERYL DINOLFO

MONROE COUNTY CLERK



PI182-201508060241-12

2015 AUG -6 AM 10:23
MONROE COUNTY CLERK
RECORDED

ENVIRONMENTAL EASEMENT GRANTED PURSUANT TO ARTICLE 71, TITLE 36 OF THE NEW YORK STATE ENVIRONMENTAL CONSERVATION LAW

THIS INDENTURE made this 30th day of June, 2015, between Owner(s) Genesee Valley Real Estate Company LLC, having an office at 160 Despatch Drive, East Rochester, NY, County of Monroe, State of New York (the "Grantor"), and The People of the State of New York (the "Grantee."), acting through their Commissioner of the Department of Environmental Conservation (the "Commissioner", or "NYSDEC" or "Department" as the context requires) with its headquarters located at 625 Broadway, Albany, New York 12233,

WHEREAS, the Legislature of the State of New York has declared that it is in the public interest to encourage the remediation of abandoned and likely contaminated properties ("sites") that threaten the health and vitality of the communities they burden while at the same time ensuring the protection of public health and the environment; and

WHEREAS, the Legislature of the State of New York has declared that it is in the public interest to establish within the Department a statutory environmental remediation program that includes the use of Environmental Easements as an enforceable means of ensuring the performance of operation, maintenance, and/or monitoring requirements and the restriction of future uses of the land, when an environmental remediation project leaves residual contamination at levels that have been determined to be safe for a specific use, but not all uses, or which includes engineered structures that must be maintained or protected against damage to perform properly and be effective, or which requires groundwater use or soil management restrictions; and

WHEREAS, the Legislature of the State of New York has declared that Environmental Easement shall mean an interest in real property, created under and subject to the provisions of Article 71, Title 36 of the New York State Environmental Conservation Law ("ECL") which contains a use restriction and/or a prohibition on the use of land in a manner inconsistent with engineering controls which are intended to ensure the long term effectiveness of a site remedial program or eliminate potential exposure pathways to hazardous waste or petroleum; and

WHEREAS, Grantor, is the owner of real property located at the address of 690 St. Paul Street in the City of Rochester, County of Monroe and State of New York, known and designated on the tax map of the County Clerk of Monroe as tax map parcel numbers: Section 106.45 Block 0001 Lot 024, being the same as that property conveyed to Grantor by deed dated December 31, 1997 and recorded in the Monroe County Clerk's Office in Liber and Page 08958/0252. The property subject to this Environmental Easement (the "Controlled Property") comprises approximately 4.739 +/- acres, and is hereinafter more fully described in the Land Title Survey dated May 19, 2008, revised on October 2, 2008 and revised and updated on August 8, 2013, April 28, 2014 and June 6, 2015 prepared by Grover & Bates Associates, 406 West Spruce Street, East Rochester, NY, which will be attached to the Site Management Plan. The Controlled Property description is set forth in and attached hereto as Schedule A; and

WHEREAS, the Department accepts this Environmental Easement in order to ensure the protection of public health and the environment and to achieve the requirements for remediation

Dante Gulisano
160 Despatch Dr. E Rochester, NY 14445

established for the Controlled Property until such time as this Environmental Easement is extinguished pursuant to ECL Article 71, Title 36; and

NOW THEREFORE, in consideration of the mutual covenants contained herein and the terms and conditions of Brownfield Cleanup Agreement Index Number: B8-0805-09-04, Grantor conveys to Grantee a permanent Environmental Easement pursuant to ECL Article 71, Title 36 in, on, over, under, and upon the Controlled Property as more fully described herein ("Environmental Easement")

1. Purposes. Grantor and Grantee acknowledge that the Purposes of this Environmental Easement are: to convey to Grantee real property rights and interests that will run with the land in perpetuity in order to provide an effective and enforceable means of encouraging the reuse and redevelopment of this Controlled Property at a level that has been determined to be safe for a specific use while ensuring the performance of operation, maintenance, and/or monitoring requirements; and to ensure the restriction of future uses of the land that are inconsistent with the above-stated purpose.

2. Institutional and Engineering Controls. The controls and requirements listed in the Department approved Site Management Plan ("SMP") including any and all Department approved amendments to the SMP are incorporated into and made part of this Environmental Easement. These controls and requirements apply to the use of the Controlled Property, run with the land, are binding on the Grantor and the Grantor's successors and assigns, and are enforceable in law or equity against any owner of the Controlled Property, any lessees and any person using the Controlled Property.

A. (1) The Controlled Property may be used for:

Restricted Residential as described in 6 NYCRR Part 375-1.8(g)(2)(ii), Commercial as described in 6 NYCRR Part 375-1.8(g)(2)(iii) and Industrial as described in 6 NYCRR Part 375-1.8(g)(2)(iv)

(2) All Engineering Controls must be operated and maintained as specified in the Site Management Plan (SMP);

(3) All Engineering Controls must be inspected at a frequency and in a manner defined in the SMP;

(4) The use of groundwater underlying the property is prohibited without necessary water quality treatment as determined by the NYSDOH or the Monroe County Department of Health to render it safe for use as drinking water or for industrial purposes, and the user must first notify and obtain written approval to do so from the Department;

(5) Groundwater and other environmental or public health monitoring must be performed as defined in the SMP;

(6) Data and information pertinent to Site Management of the Controlled Property must be reported at the frequency and in a manner defined in the SMP;

(7) All future activities on the property that will disturb remaining contaminated material must be conducted in accordance with the SMP;

(8) Monitoring to assess the performance and effectiveness of the remedy must be performed as defined in the SMP;

(9) Operation, maintenance, monitoring, inspection, and reporting of any mechanical or physical components of the remedy shall be performed as defined in the SMP;

(10) Access to the site must be provided to agents, employees or other representatives of the State of New York with reasonable prior notice to the property owner to assure compliance with the restrictions identified by this Environmental Easement.

B. The Controlled Property shall not be used for Residential purposes as defined in 6NYCRR 375-1.8(g)(2)(i), and the above-stated engineering controls may not be discontinued without an amendment or extinguishment of this Environmental Easement.

C. The SMP describes obligations that the Grantor assumes on behalf of Grantor, its successors and assigns. The Grantor's assumption of the obligations contained in the SMP which may include sampling, monitoring, and/or operating a treatment system, and providing certified reports to the NYSDEC, is and remains a fundamental element of the Department's determination that the Controlled Property is safe for a specific use, but not all uses. The SMP may be modified in accordance with the Department's statutory and regulatory authority. The Grantor and all successors and assigns, assume the burden of complying with the SMP and obtaining an up-to-date version of the SMP from:

Site Control Section
Division of Environmental Remediation
NYSDEC
625 Broadway
Albany, New York 12233
Phone: (518) 402-9553

D. Grantor must provide all persons who acquire any interest in the Controlled Property a true and complete copy of the SMP that the Department approves for the Controlled Property and all Department-approved amendments to that SMP.

E. Grantor covenants and agrees that until such time as the Environmental Easement is extinguished in accordance with the requirements of ECL Article 71, Title 36 of the ECL, the property deed and all subsequent instruments of conveyance relating to the Controlled Property shall state in at least fifteen-point bold-faced type:

This property is subject to an Environmental Easement held by the New York State Department of Environmental Conservation

pursuant to Title 36 of Article 71 of the Environmental Conservation Law.

F. Grantor covenants and agrees that this Environmental Easement shall be incorporated in full or by reference in any leases, licenses, or other instruments granting a right to use the Controlled Property.

G. Grantor covenants and agrees that it shall, at such time as NYSDEC may require, submit to NYSDEC a written statement by an expert the NYSDEC may find acceptable certifying under penalty of perjury, in such form and manner as the Department may require, that:

(1) the inspection of the site to confirm the effectiveness of the institutional and engineering controls required by the remedial program was performed under the direction of the individual set forth at 6 NYCRR Part 375-1.8(h)(3).

(2) the institutional controls and/or engineering controls employed at such site:

(i) are in-place;

(ii) are unchanged from the previous certification, or that any identified changes to the controls employed were approved by the NYSDEC and that all controls are in the Department-approved format; and

(iii) that nothing has occurred that would impair the ability of such control to protect the public health and environment;

(3) the owner will continue to allow access to such real property to evaluate the continued maintenance of such controls;

(4) nothing has occurred that would constitute a violation or failure to comply with any site management plan for such controls;

(5) the report and all attachments were prepared under the direction of, and reviewed by, the party making the certification;

(6) to the best of his/her knowledge and belief, the work and conclusions described in this certification are in accordance with the requirements of the site remedial program, and generally accepted engineering practices; and

(7) the information presented is accurate and complete.

3. Right to Enter and Inspect. Grantee, its agents, employees, or other representatives of the State may enter and inspect the Controlled Property in a reasonable manner and at reasonable times to assure compliance with the above-stated restrictions.

4. Reserved Grantor's Rights. Grantor reserves for itself, its assigns, representatives, and successors in interest with respect to the Property, all rights as fee owner of the Property, including:

A. Use of the Controlled Property for all purposes not inconsistent with, or limited by the terms of this Environmental Easement;

B. The right to give, sell, assign, or otherwise transfer part or all of the underlying fee interest to the Controlled Property, subject and subordinate to this Environmental Easement;

5. Enforcement

A. This Environmental Easement is enforceable in law or equity in perpetuity by Grantor, Grantee, or any affected local government, as defined in ECL Section 71-3603, against the owner of the Property, any lessees, and any person using the land. Enforcement shall not be defeated because of any subsequent adverse possession, laches, estoppel, or waiver. It is not a defense in any action to enforce this Environmental Easement that: it is not appurtenant to an interest in real property; it is not of a character that has been recognized traditionally at common law; it imposes a negative burden; it imposes affirmative obligations upon the owner of any interest in the burdened property; the benefit does not touch or concern real property; there is no privity of estate or of contract; or it imposes an unreasonable restraint on alienation.

B. If any person violates this Environmental Easement, the Grantee may revoke the Certificate of Completion with respect to the Controlled Property.

C. Grantee shall notify Grantor of a breach or suspected breach of any of the terms of this Environmental Easement. Such notice shall set forth how Grantor can cure such breach or suspected breach and give Grantor a reasonable amount of time from the date of receipt of notice in which to cure. At the expiration of such period of time to cure, or any extensions granted by Grantee, the Grantee shall notify Grantor of any failure to adequately cure the breach or suspected breach, and Grantee may take any other appropriate action reasonably necessary to remedy any breach of this Environmental Easement, including the commencement of any proceedings in accordance with applicable law.

D. The failure of Grantee to enforce any of the terms contained herein shall not be deemed a waiver of any such term nor bar any enforcement rights.

6. Notice. Whenever notice to the Grantee (other than the annual certification) or approval from the Grantee is required, the Party providing such notice or seeking such approval shall identify the Controlled Property by referencing the following information:

County, NYSDEC Site Number, NYSDEC Brownfield Cleanup Agreement, State Assistance Contract or Order Number, and the County tax map number or the Liber and Page or computerized system identification number.

Parties shall address correspondence to:

Site Number: C828159
Office of General Counsel
NYSDEC
625 Broadway
Albany New York 12233-5500

With a copy to:

Site Control Section
Division of Environmental Remediation
NYSDEC
625 Broadway
Albany, NY 12233

All notices and correspondence shall be delivered by hand, by registered mail or by Certified mail

and return receipt requested. The Parties may provide for other means of receiving and communicating notices and responses to requests for approval.

7. Recordation. Grantor shall record this instrument, within thirty (30) days of execution of this instrument by the Commissioner or her/his authorized representative in the office of the recording officer for the county or counties where the Property is situated in the manner prescribed by Article 9 of the Real Property Law.

8. Amendment. Any amendment to this Environmental Easement may only be executed by the Commissioner of the New York State Department of Environmental Conservation or the Commissioner's Designee, and filed with the office of the recording officer for the county or counties where the Property is situated in the manner prescribed by Article 9 of the Real Property Law.

9. Extinguishment. This Environmental Easement may be extinguished only by a release by the Commissioner of the New York State Department of Environmental Conservation, or the Commissioner's Designee, and filed with the office of the recording officer for the county or counties where the Property is situated in the manner prescribed by Article 9 of the Real Property Law.

10. Joint Obligation. If there are two or more parties identified as Grantor herein, the obligations imposed by this instrument upon them shall be joint and several.

Remainder of Page Intentionally Left Blank

IN WITNESS WHEREOF, Grantor has caused this instrument to be signed in its name.

Genesee Valley Real Estate Company LLC:

By: Dante Gullace

Print Name: DANTE GULLACE

Title: Member Date: 6/12/15

Grantor's Acknowledgment

STATE OF NEW YORK)
) ss:
COUNTY OF Monroe)

On the 12 day of June, in the year 2015, before me, the undersigned, personally appeared Dante Gullace personally known to me or proved to me on the basis of satisfactory evidence to be the individual(s) whose name is (are) subscribed to the within instrument and acknowledged to me that he/she/they executed the same in his/her/their capacity(ies), and that by his/her/their signature(s) on the instrument, the individual(s), or the person upon behalf of which the individual(s) acted, executed the instrument.

Tracy Bansbach
Notary Public - State of New York

Tracy Bansbach
Notary Public, State of New York
Qualified In Monroe County
No. 01BA06093394
Commission Expires June 2, 2019

THIS ENVIRONMENTAL EASEMENT IS HEREBY ACCEPTED BY THE PEOPLE OF THE STATE OF NEW YORK, Acting By and Through the Department of Environmental Conservation as Designee of the Commissioner,

By: _____

Robert W. Schick, Director
Division of Environmental Remediation

Grantee's Acknowledgment

STATE OF NEW YORK)
) ss:
COUNTY OF ALBANY)

On the 30th day of June, in the year 2015, before me, the undersigned, personally appeared Robert W. Schick, personally known to me or proved to me on the basis of satisfactory evidence to be the individual(s) whose name is (are) subscribed to the within instrument and acknowledged to me that he/she/ executed the same in his/her/ capacity as Designee of the Commissioner of the State of New York Department of Environmental Conservation, and that by his/her/ signature on the instrument, the individual, or the person upon behalf of which the individual acted, executed the instrument.

_____
Notary Public - State of New York

David J. Chiusano
Notary Public, State of New York
No. 01CH5032146
Qualified in Schenectady County
Commission Expires August 22, 2018

SCHEDULE "A" PROPERTY DESCRIPTION

ALL THAT TRACT OR PARCEL OF LAND, situate in Town Lot 2, Township 13, Range 7, Third Division, Section A of The Galusha Tract, in the City of Rochester, County of Monroe, and State of New York, as shown on the drawing entitled "Map of an Instrument Survey of St. Paul Street Resubdivision, being No. 690 – 730 St. Paul Street, also No. 166 Martin Street, being Lands of Genesee Valley Real Estate Company, LLC" prepared by Grover & Bates Associates, having project number 07-R282, dated May 19, 2008 last revised April 28, 2014, being more particularly bounded and described as follows:

Beginning at a point on the northeasterly corner of St. Paul Street and Lowell Street, said point being the point or place of beginning;

1. Thence; Running a line easterly along the northerly right of way line of Lowell Street a distance of 274.21 feet, to a point, said point being the northwesterly intersection of Lowell Street and Martin Street
2. Thence; Turning an interior angle of 90°09'20" to the left and running a line along the westerly right of way line of Martin Street a distance of 752.18 feet, to a point, said point being the southwesterly intersection of Martin Street and Hartel Alley
3. Thence; Turning an interior angle of 89°29'44" to the left and running a line along the southerly right of way line of Hartel Alley a distance of 274.24 feet, to a point, said point being the southeasterly intersection of Hartel Alley and St. Paul Street
4. Thence; Turning an interior angle of 90°30'11" to the left and running a line along the easterly right of way line of St. Paul Street a distance of 750.51 feet, to a point, said point being the point or place of beginning.

Intending to describe a 4.73 acre parcel at 690 St. Paul Street.

SOIL CAP AREA

ALL THAT TRACT OR PARCEL OF LAND, situate in Town Lot 2, Township 13, Range 7, Third Division, Section A of The Galusha Tract, in the City of Rochester, County of Monroe, and State of New York, as shown on the drawing entitled "Map of an Instrument Survey of St. Paul Street Resubdivision, being No. 690 – 730 St. Paul Street, also No. 166 Martin Street, being Lands of Genesee Valley Real Estate Company, LLC" prepared by Grover & Bates Associates, having project number 07-R282, dated May 19, 2008 last revised April 28, 2014, being more particularly bounded and described as follows:

Commencing at a point on the northeasterly corner of St. Paul Street and Lowell Street; thence, running a line northerly along the easterly right of way line of St. Paul Street a distance of 280.42 feet to a point; thence; turning an interior angle of 90°00'00 to the right and running a line easterly a distance of 122.59 feet, to a point, said point being the point or place of beginning;

1. Thence; Turning an exterior angle of 179°54'20" to the left and running a line a distance of 25.78 feet, to a point,
2. Thence; Turning an interior angle of 90°12'44" to the left and running a line a distance of 37.31 feet, to a point
3. Thence; Turning an exterior angle of 127°38'31" to the right and running a line a distance of 18.95 feet, to a point
4. Thence; Turning an interior angle of 106°07'37" to the left and running a line a distance of 22.63 feet, to a point
5. Thence; Turning an exterior angle of 70°02'38" to the right and running a line a distance of 16.41 feet, to a point
6. Thence; Turning an interior angle of 168°11'46" to the left and running a line a distance of 30.79 feet, to a point
7. Thence; Turning an interior angle of 102°26'16" to the left and running a line a distance of 6.21 feet, to a point
8. Thence; Turning an interior angle of 90°20'46" to the left and running a line a distance of 54.40 feet, to a point
9. Thence; Turning an interior angle of 92°48'43" to the left and running a line a distance of 12.88 feet, to a point
10. Thence; Turning an exterior angle of 92°21'56" to the right and running a line a distance of 24.08 feet, to a point
11. Thence; Turning an interior angle of 89°56'12" to the left and running a line a distance of 70.32 feet, to a point, said point being the point or place of beginning.

, Intending to describe a 2750.3 square foot (0.063 Acre) Soil Cap Area at 690 St. Paul Street.

NOTES:
1. THIS PROJECT IS MORE THAN 1200 FEET FROM THE NEAREST MONROE COUNTY MONUMENTAND THEREFORE IS NOT TIED INTO THAT SYSTEM.
2. THE PERIMETER AND TIES TO THE CITY OF ROCHESTER MONUMENT SYSTEM WERE ACCOMPLISHED BY PROCEDURES NECESSARY TO ACHIEVE A RELATIVE ACCURACY OF 1 PART IN 10,000 OR BETTER.

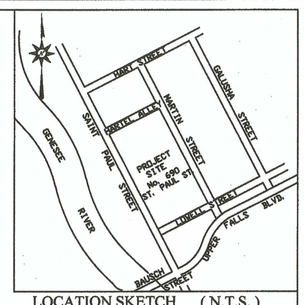

LOCATION SKETCH (N.T.S.)
CITY OF ROCHESTER

MAP OF AN INSTRUMENT SURVEY OF

ST. PAUL STREET RESUBDIVISION

BEING

No. 690 - 730 ST. PAUL STREET

ALSO

No. 166 MARTIN STREET

BEING

LANDS OF THE

GENESEE VALLEY REAL ESTATE COMPANY, LLC

SITUATE IN

PART OF THE GALUSHA TRACT, SECTION A
TOWN LOT 2, THIRD DIVISION, TOWNSHIP 13, RANGE 7

CITY OF ROCHESTER
COUNTY OF MONROE
STATE OF NEW YORK

SCALE 1 INCH = 30 FEET

DATE: MAY 19, 2008
REVISED: OCTOBER 2. 2008
REVISED & UPDATED: AUGUST 8, 2013
REVISED & UPDATED: APRIL 28, 2014
REVISED & UPDATED: JUNE 6, 2015

GROVER & BATES ASSOCIATES
406 WEST SPRUCE STREET
EAST ROCHESTER, NEW YORK
585-381-0021

ENGINEERING/INSTITUTIONAL CONTROLS SUBJECT TO EASEMENT:

ALL INTRUSIVE ACTIVITY THAT WILL CAUSE DISTURBANCE OF SOIL MUST BE CONDUCTED IN ACCORDANCE WITH THE SITE MANAGEMENT MUST COMPLY WITH THE SITE MANAGEMENT PLAN REQUIREMENTS TO SUBMIT A WORK PLAN USING THE STATE'S MOST RECENT SOIL VAPOR INTRUSION GUIDANCE: AND GROUNDWATER USE RESTRICTION COVERS ENTIRE EASEMENT AREA / PARCEL: AND VEGETABLE GARDENING/FARMING RESTRICTION COVERS THE ENTIRE EASEMENT AREA/PARCEL.

REFERENCES:
1. MAP OF THE GALUSHA TRACT, LIBER 1 OF MAPS, PAGE 131 & LIBER 4 OF MAPS,PAGE 16.
2. LIBER 8958 OF DEEDS, PAGE 252.
3. SUBJECT TO AN EASEMENT TO R.G.& E. AND R.T.C. PER L.6913, P.41.
4. SUBJECT TO REVISIONS UPON REVIEW OF AN UPDATED ABSTRACT OF TITLE. NONE PROVIDED
5. LIBER 1180 OF APPROPRIATION MAPS PAGES 265-270.
6. LIBER 11227 OF DEEDS, PAGE 639.
7. TAX ACCOUNT No. 106.45-1-24. (No. 690 / 730 ST. PAUL STREET)
8. TAX ACCOUNT No. 106.46-3-36. (166 MARTIN STREET)

NOTES:
1. NO BUILDING OR RE-GRADING IS TO COMMENCE TO THIS SITE WITHOUT AN APPROVED SITE AND GRADING PLAN, APPROVED BY THE CITY ENGINEER, BEING SUBMITTED TO THE CITY OF ROCHESTER AND PRIOR TO THE ISSUANCE OF A BUILDING PERMIT. THIS PLAN MUST BE COMPLETED BY A PROFESSIONAL ENGINEER OR LAND SURVEYOR AND PRIOR TO ANY BUILDING OR GRADING OF THE EXISTING OR NATURAL DRAINAGE ON THIS SITE.
2. THIS PROPERTY IS SUBJECT TO AN ENVIRONMENTAL EASEMENT HELD BY THE NEW YORK STATE DEPARTMENT OF ENVIRONMENTAL CONSERVATION PURSUANT TO TITLE 36 OF ARTICLE 71 OF THE NEW YORK ENVIRONMENTAL CONSERVATION LAW. THE ENGINEERING AND INSTITUTIONAL CONTROLS FOR THIS EASEMENT ARE SET FORTH IN THE SITE MANAGEMENT PLAN (SMP). A COPY OF THE SMP MUST BE OBTAINED FROM THE NYS DEPARTMENT OF ENVIRONMENTAL CONSERVATION, DIVISION OF ENVIRONMENTAL REMEDIATION, SITE CONTROL SECTION, 625 BROADWAY, ALBANY, NY 12233 OR AT DERWEB@DEC.NY.GOV.

LEGEND
- LIGHTPOLE W/ ELECTRIC LINE
- RCS MONUMENT & MONUMENT LINE
- FENCE LINE
- MW-10 MONITORING WELL
- SOIL CAP AREA

SQ. FT. – SQUARE FEET
CONC. – CONCRETE
MEAS – MEASURED
FNC = FENCE

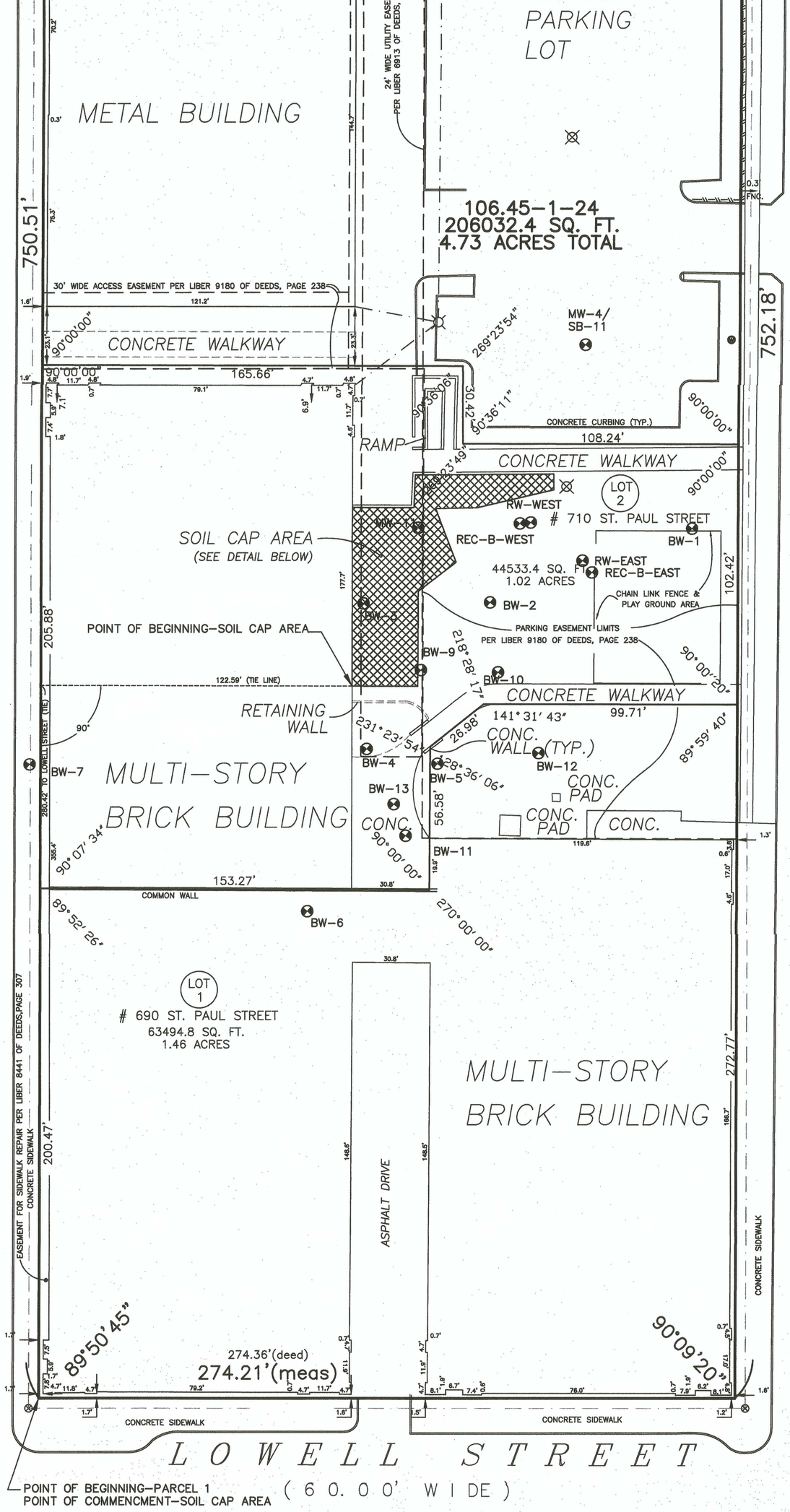

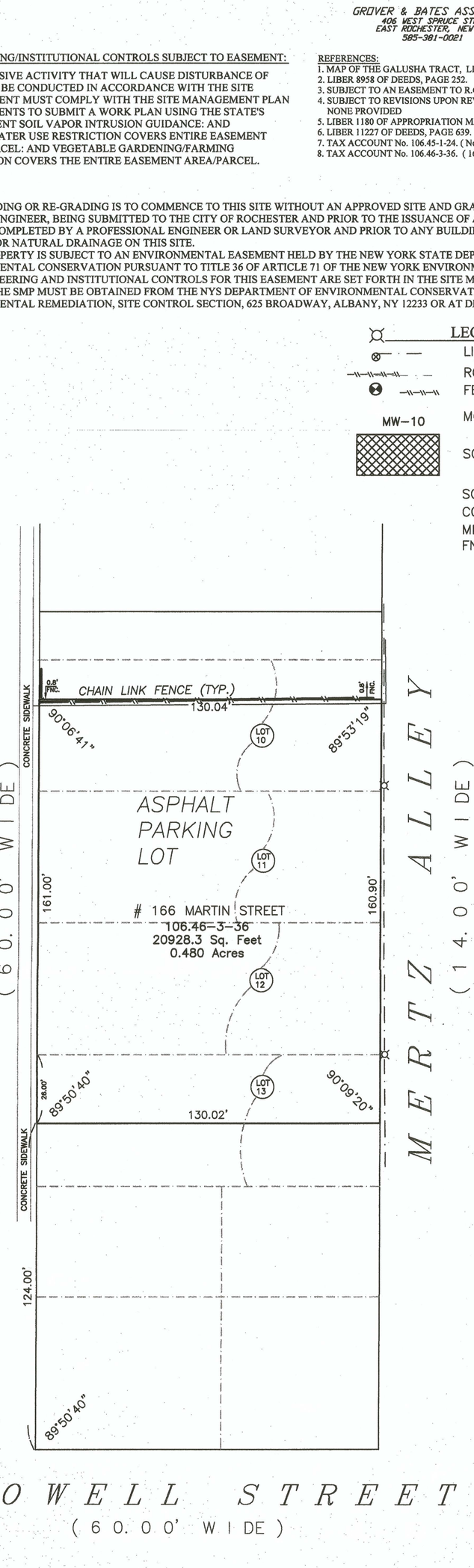

PARCEL No. 1 (4.730 ACRES)

(PARCEL SUBJECT TO ENVIRONMENTAL EASEMENT)

ENVIRONMENTAL EASEMENT

BEGINNING AT A POINT ON THE NORTHEASTERLY CORNER OF ST. PAUL STREET AND LOWELL STREET, SAID POINT BEING THE POINT OR PLACE OF BEGINNING;

1. THENCE; RUNNING A LINE EASTERLY ALONG THE NORTHERLY RIGHT OF WAY LINE OF LOWELL STREET A DISTANCE OF 274.21 FEET, TO A POINT, SAID POINT BEING THE NORTHWESTERLY INTERSECTION OF LOWELL STREET AND MARTIN STREET
2. THENCE; TURNING AN INTERIOR ANGLE OF 90°09'20" TO THE LEFT AND RUNNING A LINE ALONG THE WESTERLY RIGHT OF WAY LINE OF MARTIN STREET A DISTANCE OF 752.18 FEET, TO A POINT, SAID POINT BEING THE SOUTHWESTERLY INTERSECTION OF MARTIN STREET AND HARTEL ALLEY
3. THENCE; TURNING AN INTERIOR ANGLE OF 89°29'44" TO THE LEFT AND RUNNING A LINE ALONG THE SOUTHERLY RIGHT OF WAY LINE OF HARTEL ALLEY A DISTANCE OF 274.24 FEET, TO A POINT, SAID POINT BEING THE SOUTHEASTERLY INTERSECTION OF HARTEL ALLEY AND ST. PAUL STREET
4. THENCE; TURNING AN INTERIOR ANGLE OF 90°30'11" TO THE LEFT AND RUNNING A LINE ALONG THE EASTERLY RIGHT OF WAY LINE OF ST. PAUL STREET A DISTANCE OF 750.51 FEET, TO A POINT, SAID POINT BEING THE POINT OR PLACE OF BEGINNING.

INTENDING TO DESCRIBE A 4.73 ACRE PARCEL AT 690 ST. PAUL STREET.

SOIL CAP AREA

COMMENCING AT A POINT ON THE NORTHEASTERLY CORNER OF ST. PAUL STREET AND LOWELL STREET; THENCE, RUNNING A LINE NORTHERLY ALONG THE EASTERLY RIGHT OF WAY LINE OF ST. PAUL STREET A DISTANCE OF 280.42 FEET TO A POINT; THENCE; TURNING AN INTERIOR ANGLE OF 90°00'00 TO THE RIGHT AND RUNNING A LINE EASTERLY A DISTANCE OF 122.59 FEET, TO A POINT, SAID POINT BEING THE POINT OR PLACE OF BEGINNING;

1. THENCE; TURNING AN EXTERIOR ANGLE OF 179°54'20" TO THE LEFT AND RUNNING A LINE A DISTANCE OF 25.78 FEET, TO A POINT,
2. THENCE; TURNING AN INTERIOR ANGLE OF 90°12'44" TO THE LEFT AND RUNNING A LINE A DISTANCE OF 37.31 FEET, TO A POINT
3. THENCE; TURNING AN EXTERIOR ANGLE OF 127°38'31" TO THE RIGHT AND RUNNING A LINE A DISTANCE OF 18.95 FEET, TO A POINT
4. THENCE; TURNING AN INTERIOR ANGLE OF 106°07'37" TO THE LEFT AND RUNNING A LINE A DISTANCE OF 22.63 FEET, TO A POINT
5. THENCE; TURNING AN EXTERIOR ANGLE OF 70°02'38" TO THE RIGHT AND RUNNING A LINE A DISTANCE OF 16.41 FEET, TO A POINT
6. THENCE; TURNING AN INTERIOR ANGLE OF 168°11'46" TO THE LEFT AND RUNNING A LINE A DISTANCE OF 30.79 FEET, TO A POINT
7. THENCE; TURNING AN INTERIOR ANGLE OF 102°26'16" TO THE LEFT AND RUNNING A LINE A DISTANCE OF 6.21 FEET, TO A POINT
8. THENCE; TURNING AN INTERIOR ANGLE OF 90°20'46" TO THE LEFT AND RUNNING A LINE A DISTANCE OF 54.40 FEET, TO A POINT
9. THENCE; TURNING AN INTERIOR ANGLE OF 92°48'43" TO THE LEFT AND RUNNING A LINE A DISTANCE OF 12.88 FEET, TO A POINT
10. THENCE; TURNING AN EXTERIOR ANGLE OF 92°21'56" TO THE RIGHT AND RUNNING A LINE A DISTANCE OF 24.08 FEET, TO A POINT
11. THENCE; TURNING AN INTERIOR ANGLE OF 89°56'12" TO THE LEFT AND RUNNING A LINE A DISTANCE OF 70.32 FEET, TO A POINT, SAID POINT BEING THE POINT OR PLACE OF BEGINNING.

INTENDING TO DESCRIBE A 0.063 ACRE SOIL CAP AREA AT 690 ST. PAUL STREET.

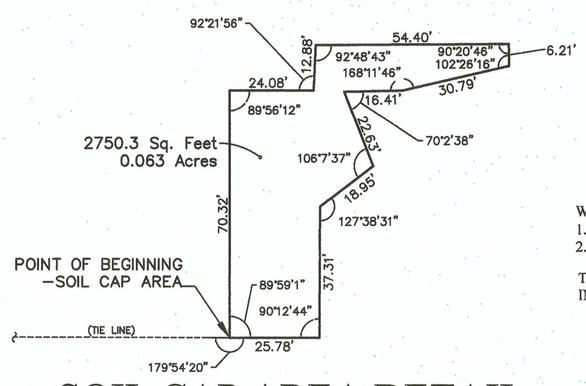

SOIL CAP AREA DETAIL

PARCEL No. 2 (0.480 ACRES)

(PARCEL IS NOT SUBJECT TO ENVIRONMENTAL EASEMENT)

UNAUTHORIZED ALTERATION OR ADDITION TO A SURVEY MAP BEARING A LICENSED LAND SURVEYOR'S SEAL IS A VIOLATION OF SECTION 7209, SUBDIVISION 2, OF THE NEW YORK STATE EDUCATION LAW.

CERTIFICATIONS LISTED HEREON SIGNIFY THAT THIS SURVEY WAS PREPARED IN ACCORDANCE WITH THE EXISTING CODE OF PRACTICE FOR LAND SURVEYS ADOPTED BY THE G.V.L.S.A. AND THE MONROE COUNTY BAR ASSOCIATION.

WE, GROVER & BATES ASSOCIATES DO HEREBY CERTIFY TO THE FOLLOWING;
1. NEW YORK STATE DEPARTMENT OF ENVIRONMENTAL CONSERVATION;
2. GENESEE VALLEY REAL ESTATE COMPANY LLC;

THAT THIS MAP WAS MADE FROM NOTES OF AN INSTRUMENT SURVEY COMPLETED ON JUNE 13, 2008 AND REDATED ON APRIL 23, 2014.

JAMES E. BATES, Jr. LICENSE No. 49464

STATE OF NEW YORK
JAMES E. BATES, Jr.
No. 49464
Licensed Land Surveyor

JOB No. 07-R282

APPENDIX 2

CONTACT LIST

APPENDIX 2 – LIST OF SITE CONTACTS

Name	Phone / Email Address
Site Owner – Dante Gullace (Genesee Valley Real Estate)	585-641-2866 / dante@fultonfriedman.com
Professional Engineer – Dan Noll	585-295-6611 / dnoll@labellapc.com
NYSDEC DER Project Manager – Mr. Frank Sowers	585-226-5357 / frank.sowers@dec.ny.gov
NYSDEC Regional HW Engineer – Ms. Bernette Schilling	585-226-5315 / bernette.schiliing@dec.ny.gov
NYSDEC Site Control – Ms. Kelly Lewandowski	518-402-9553/ kelly.lewandowski@dec.ny.us

APPENDIX 3

BORING AND WELL LOGS

LABELLA

SURFACE SOIL SAMPLING LOG

PROJECT NAME: 690 Saint Paul Street
LOCATION: 690 Saint Paul Street, Rochester, New York
PROJECT NO.: 209280
LABELLA REP: E. Dumrese
WEATHER AM: Partly Sunny & Cold ~ 24 Degrees **PM:** Snowy & Cold
DATE: 12/22/2009 & 12/28/09

Location	Date Sampled	Background Radiation (µrem/h)	Radiation		VOCs (ppm)	
			0"-2"	2"-2'	0"-2"	2"-2'
SS-1	12/28/2009	See Notes Section	17	19	0.0	0.0
SS-2	12/28/2009	See Notes Section	12	19	0.0	0.0
SS-3	12/28/2009	See Notes Section	12	12	0.0	0.0
SS-4	12/28/2009	See Notes Section	19	17	0.0	0.0
SS-5	12/28/2009	See Notes Section	15	11	0.0	0.0
SS-6	12/28/2009	See Notes Section	11	19	0.0	0.0
SS-7	12/22/2009	See Notes Section	14	18	0.0	0.0
SS-8	12/28/2009	See Notes Section	16	14	0.0	0.0
SS-9	12/28/2009	See Notes Section	13	16	0.0	0.0
SS-10	12/28/2009	See Notes Section	11	15	0.0	0.0

Notes/Activities:

Site background (Ludlum): 10-15 µrem/hour

Twice background (Ludlum): 20-30 µrem/hour

Site background (Bicron): 50-80 µrem/hour

Twice background (Bicron): 160 µrem/hour

LABELLA Associates, P.C.

MONITORING WELL INSTALLATION REPORT

MONITORING WELL ID: **BW-13**

Project:	690 St. Paul Street	LaBella Project No.:	209280
Location:	690 St. Paul Street, Rochester, New York	LaBella Representative:	M. Pelychaty
Client:	Genesee Valley Real Estate	Date Installed:	May 14-17, 2012
Contractor(s):	Nothnagle Drilling	Time:	to
Driller:	K. Bush	Type of Drill Rig:	BK-81
Rock Coring Method:	NX Core	Auger size and type:	

Ground El.: Not Applicable | Location: SEE PLAN | Depth to bedrock:

BOREHOLE BACKFILL

(Numbers refer to depth from ground surface in feet)

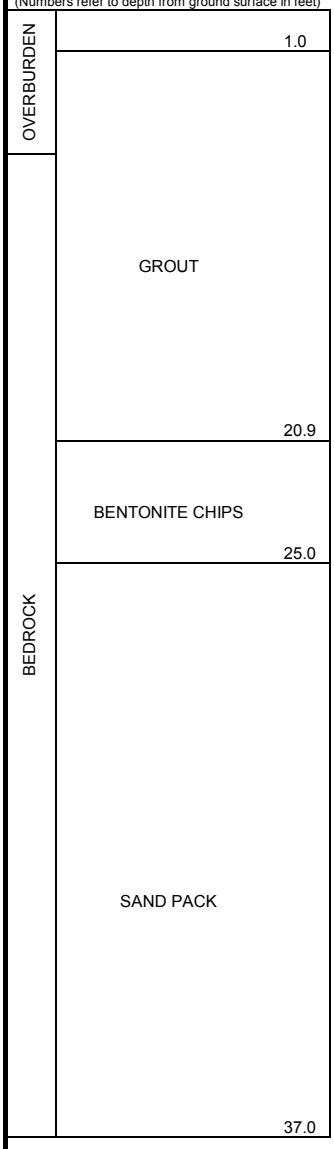

Elevation/Depth of riser pipe		ft.
8" Steel Casing		
Type of Riser/Silt Pipe	Schedule 40 PVC	
Inside diameter	2.0	in.
Outside diameter	2.5	in.
Bottom of Casing	22.0	ft.
Depth of top of Screen	27.0	ft.
Diameter of borehole	~6.0	in.
Type of Screen	0.010 in. Schedule 40 PVC	
Depth of bottom of Screen	37.0	ft.
Depth of bottom of Silt trap	Not Applicable	ft.
Depth of bottom of borehole	37.0	ft.

NOTES:

Well completed with flush mount well cover and locking J-Plug

LABELLA Associates, P.C.
300 STATE STREET, ROCHESTER, NEW YORK
ENVIRONMENTAL ENGINEERING CONSULTANTS

WELL CONSTRUCTION LOG
Remedial Measures NYSDEC BCP Site #C828159
690 St. Paul Street
Rochester, New York

WELL ID **TW-1**
SHEET 1 OF 1
JOB # 209280
CHKD. BY:

CONTRACTOR: NYEG
DRILLER Brian G.
LABELLA REPRESENTATIVE: KR Miller

WELL LOCATION: SOUTHERNMOST IN ALLEY/LOADING DOCK AREA
GROUND SURFACE ELEVATION DATUM
START DATE 7/8/2015 END DATE 7/15/2015

TYPE OF DRILL RIG: MOBILE B-59 TRUCK MTD.
AUGER SIZE AND TYPE 8.25-INCH HOLLOW STEM AUGERS
OVERBURDEN SAMPLING METHOD: 2-INCH SPLIT SPOON
ROCK DRILLING METHOD NOMINAL 8-INCH ROLLER BIT

WATER LEVEL DATA

DATE	TIME	WATER	REMARKS

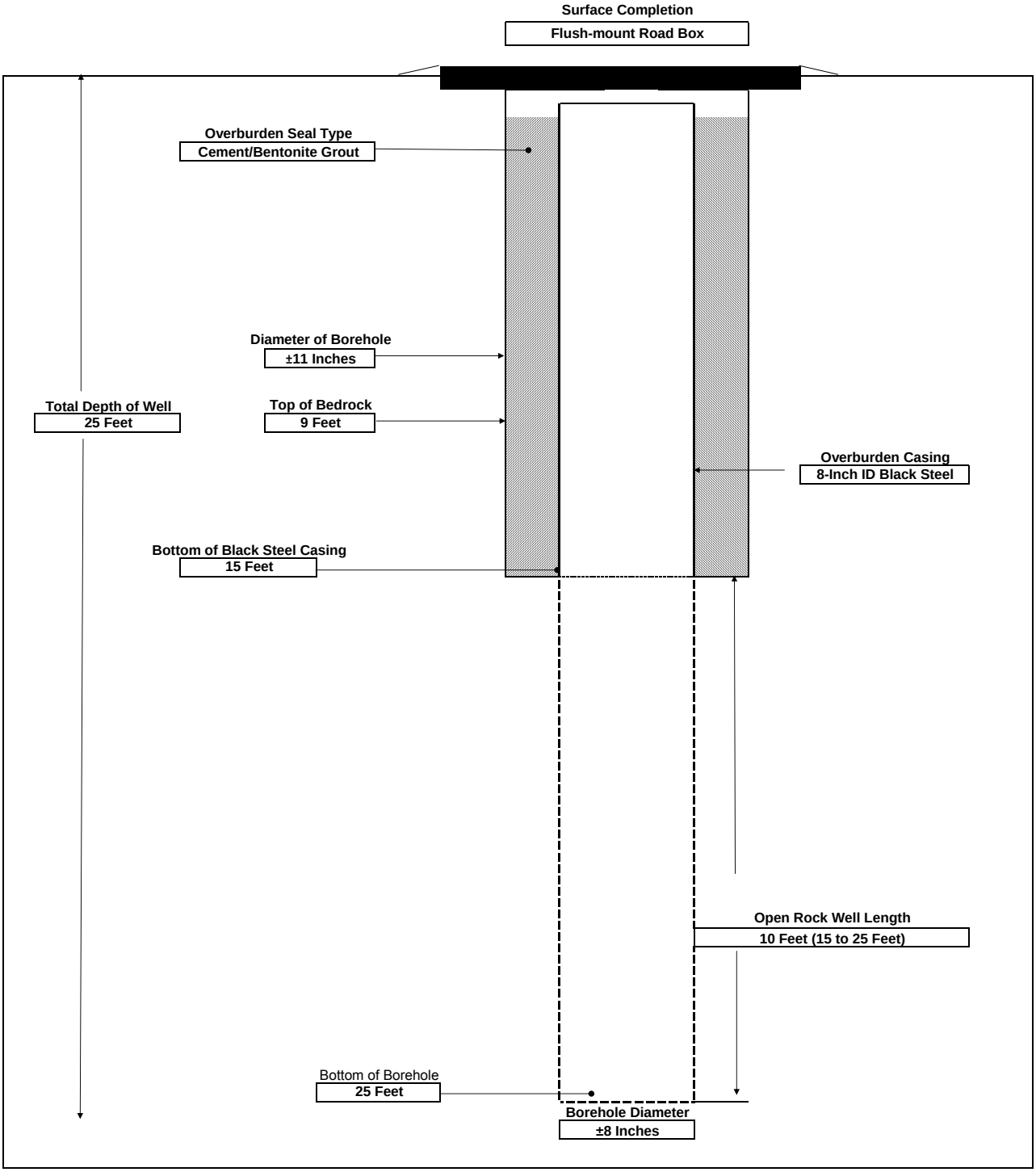

NOTE: NOT TO SCALE

LABELLA Associates, P.C.
300 STATE STREET, ROCHESTER, NEW YORK
ENVIRONMENTAL ENGINEERING CONSULTANTS

WELL CONSTRUCTION LOG
Remedial Measures NYSDEC BCP Site #C828159
690 St. Paul Street
Rochester, New York

WELL ID **TW-2**
SHEET 1 OF 1
JOB # 209280
CHKD. BY:

CONTRACTOR: NYEG
DRILLER Brian G.
LABELLA REPRESENTATIVE: KR Miller

WELL LOCATION: ALLEY/LOADING DOCK AREA; ±14´ NORTH OF TW-1
GROUND SURFACE ELEVATION DATUM
START DATE 7/13/2015 END DATE 7/17/2015

TYPE OF DRILL RIG: MOBILE B-59 TRUCK MTD.
AUGER SIZE AND TYPE 8.25-INCH HOLLOW STEM AUGERS
OVERBURDEN SAMPLING METHOD: 2-INCH SPLIT SPOON
ROCK DRILLING METHOD NOMINAL 8-INCH ROLLER BIT

WATER LEVEL DATA

DATE	TIME	WATER	REMARKS

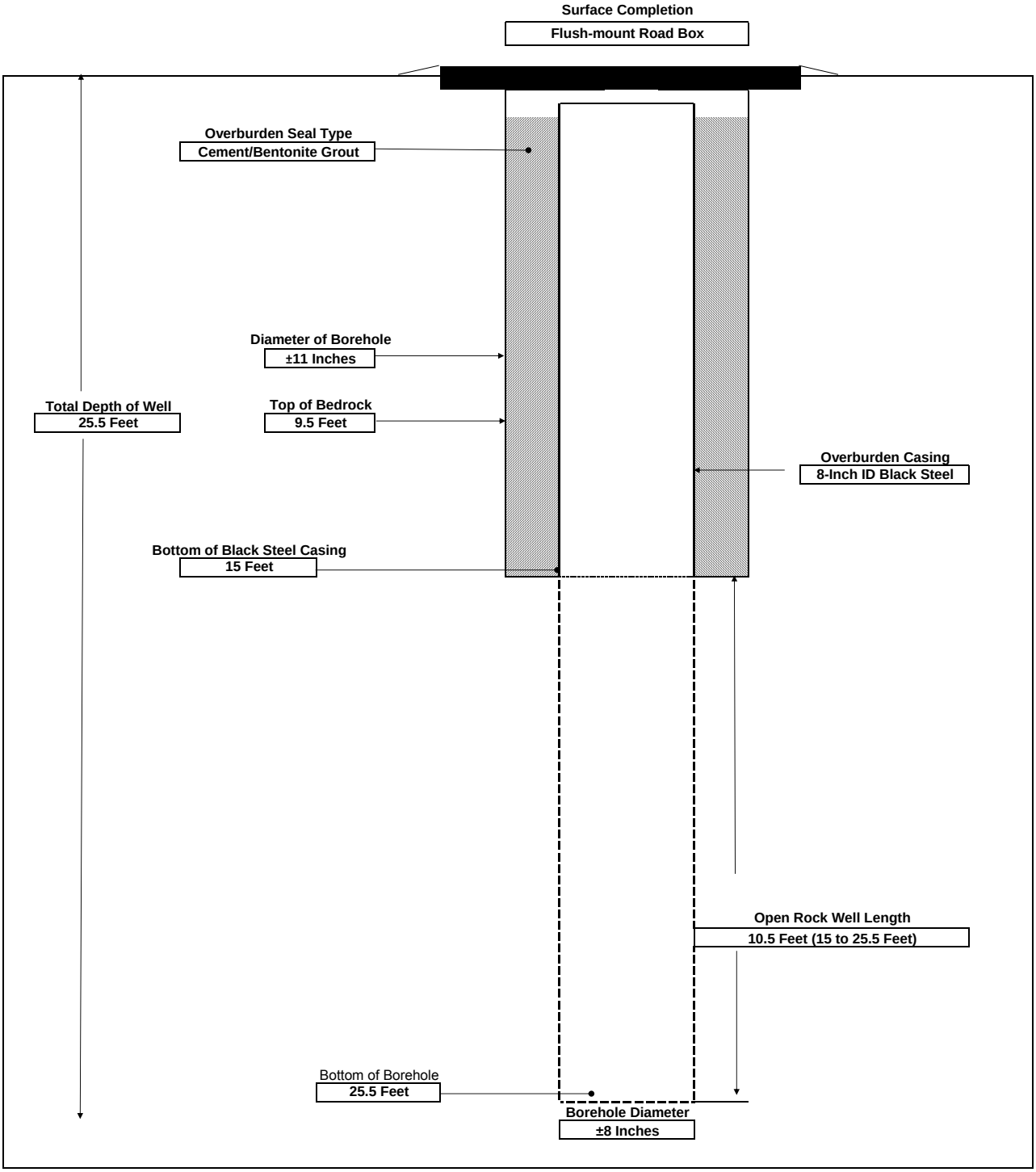

NOTE: NOT TO SCALE

LABELLA Associates, P.C.
300 STATE STREET, ROCHESTER, NEW YORK
ENVIRONMENTAL ENGINEERING CONSULTANTS

WELL CONSTRUCTION LOG
Remedial Measures NYSDEC BCP Site #C828159
690 St. Paul Street
Rochester, New York

WELL ID **TW-3A**
SHEET 1 OF 1
JOB # 209280
CHKD. BY:

CONTRACTOR: NYEG
DRILLER Brian G.
LABELLA REPRESENTATIVE: KR Miller

WELL LOCATION: NORTHERNMOST IN ALLEY/LOADING DOCK AREA
GROUND SURFACE ELEVATION DATUM
START DATE 7/21/2015 END DATE 7/24/2015

TYPE OF DRILL RIG: MOBILE B-59 TRUCK MTD.
AUGER SIZE AND TYPE 8.25-INCH HOLLOW STEM AUGERS
OVERBURDEN SAMPLING METHOD: 2-INCH SPLIT SPOON
ROCK DRILLING METHOD NOMINAL 8-INCH ROLLER BIT

WATER LEVEL DATA

DATE	TIME	WATER	REMARKS

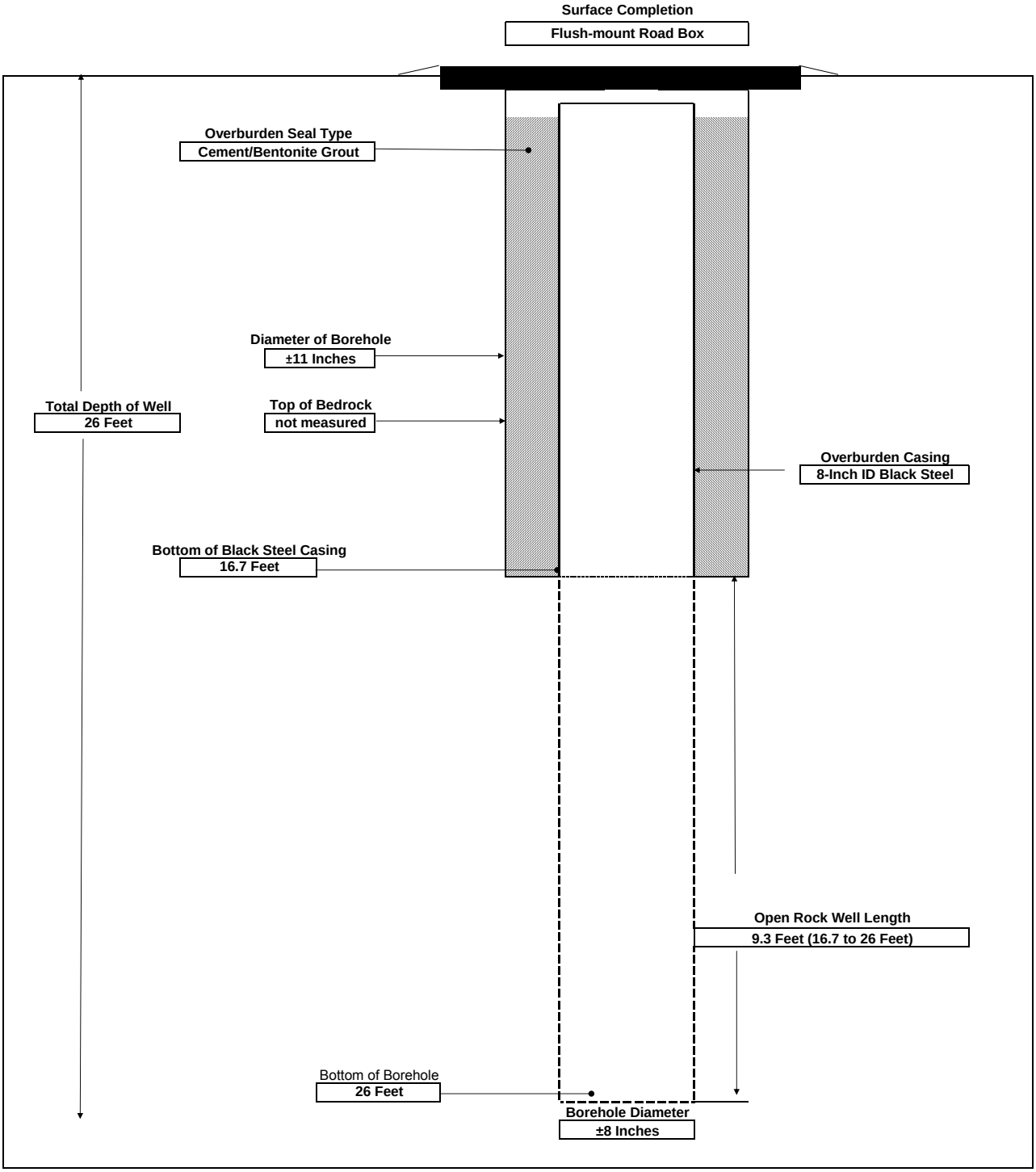

NOTE: NOT TO SCALE

LABELLA Associates, P.C.
300 STATE STREET, ROCHESTER, NEW YORK
ENVIRONMENTAL ENGINEERING CONSULTANTS

WELL CONSTRUCTION LOG
Remedial Measures NYSDEC BCP Site #C828159
690 St. Paul Street
Rochester, New York

WELL ID **TW-4**
SHEET 1 OF 1
JOB # 209280
CHKD. BY:

CONTRACTOR: NYEG
DRILLER H. Lyons
LABELLA REPRESENTATIVE: DJK & KR Miller

WELL LOCATION: INTERIOR, NORTH OF ALLEY/LOADING DOCK AREA
GROUND SURFACE ELEVATION DATUM
START DATE 8/6/2015 END DATE 8/11/2015

TYPE OF DRILL RIG: CME 45B SKID-MTD.
AUGER SIZE AND TYPE 8.25-INCH HOLLOW STEM AUGERS
OVERBURDEN SAMPLING METHOD: 2-INCH SPLIT SPOON
ROCK DRILLING METHOD NOMINAL 8-INCH ROLLER BIT

WATER LEVEL DATA

DATE	TIME	WATER	REMARKS

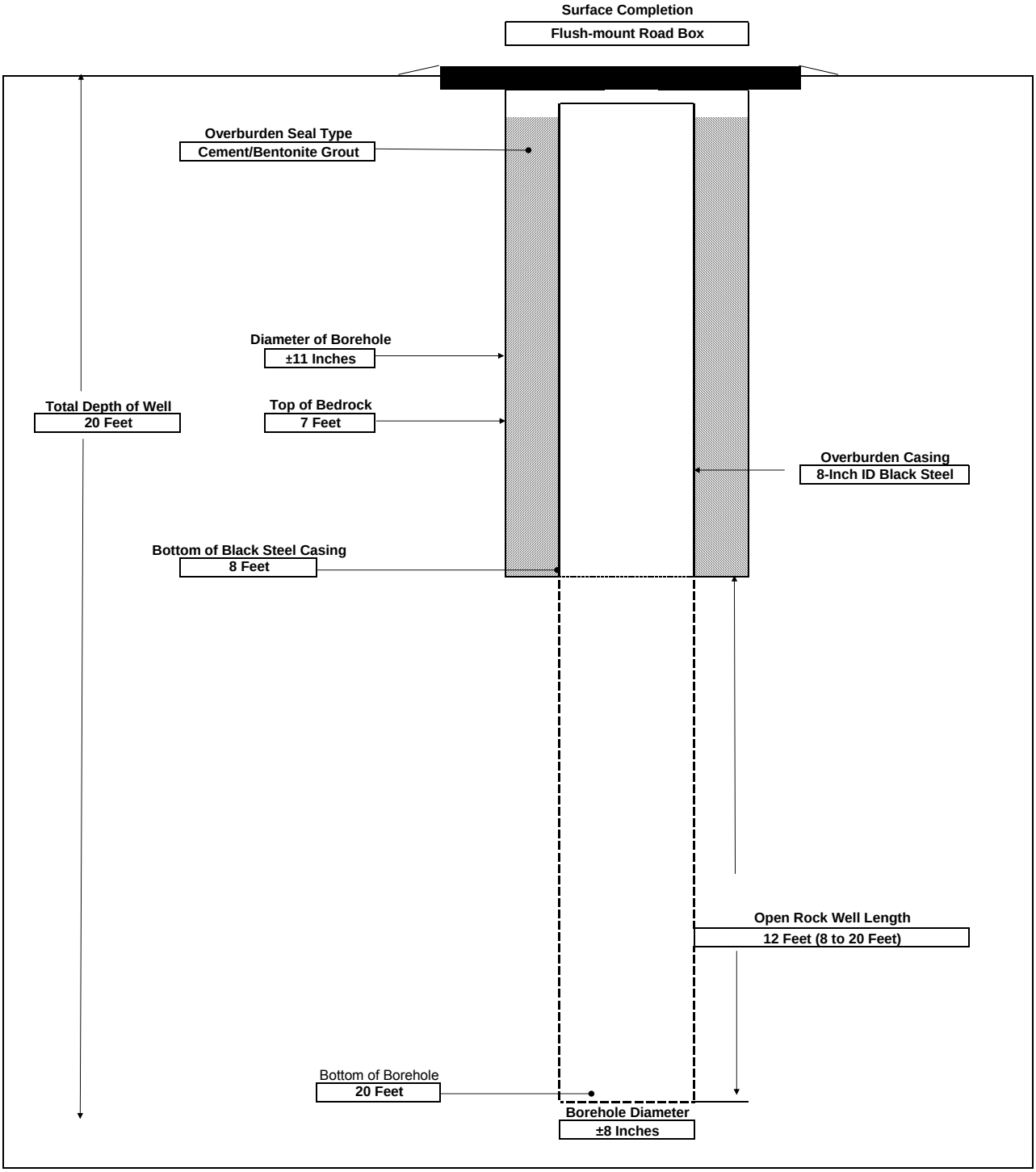

NOTE: NOT TO SCALE

LABELLA Associates, P.C.
300 STATE STREET, ROCHESTER, NEW YORK
ENVIRONMENTAL ENGINEERING CONSULTANTS

WELL CONSTRUCTION LOG
Remedial Measures NYSDEC BCP Site #C828159
690 St. Paul Street
Rochester, New York

WELL ID **TW-5**
SHEET 1 OF 1
JOB # 209280
CHKD. BY:

CONTRACTOR: NYEG
DRILLER Joel
LABELLA REPRESENTATIVE: KR Miller

WELL LOCATION: EXTERIOR SIDEWALK ENTRANCE AREA, SOUTHERNMOST OF 3 TREATMENT WELLS HERE
GROUND SURFACE ELEVATION DATUM
START DATE 7/21/2015 END DATE 7/24/2015

TYPE OF DRILL RIG: CME TRUCK-MTD.
AUGER SIZE AND TYPE 8.25-INCH HOLLOW STEM AUGERS
OVERBURDEN SAMPLING METHOD: 2-INCH SPLIT SPOON
ROCK DRILLING METHOD NOMINAL 8-INCH ROLLER BIT

WATER LEVEL DATA

DATE	TIME	WATER	REMARKS

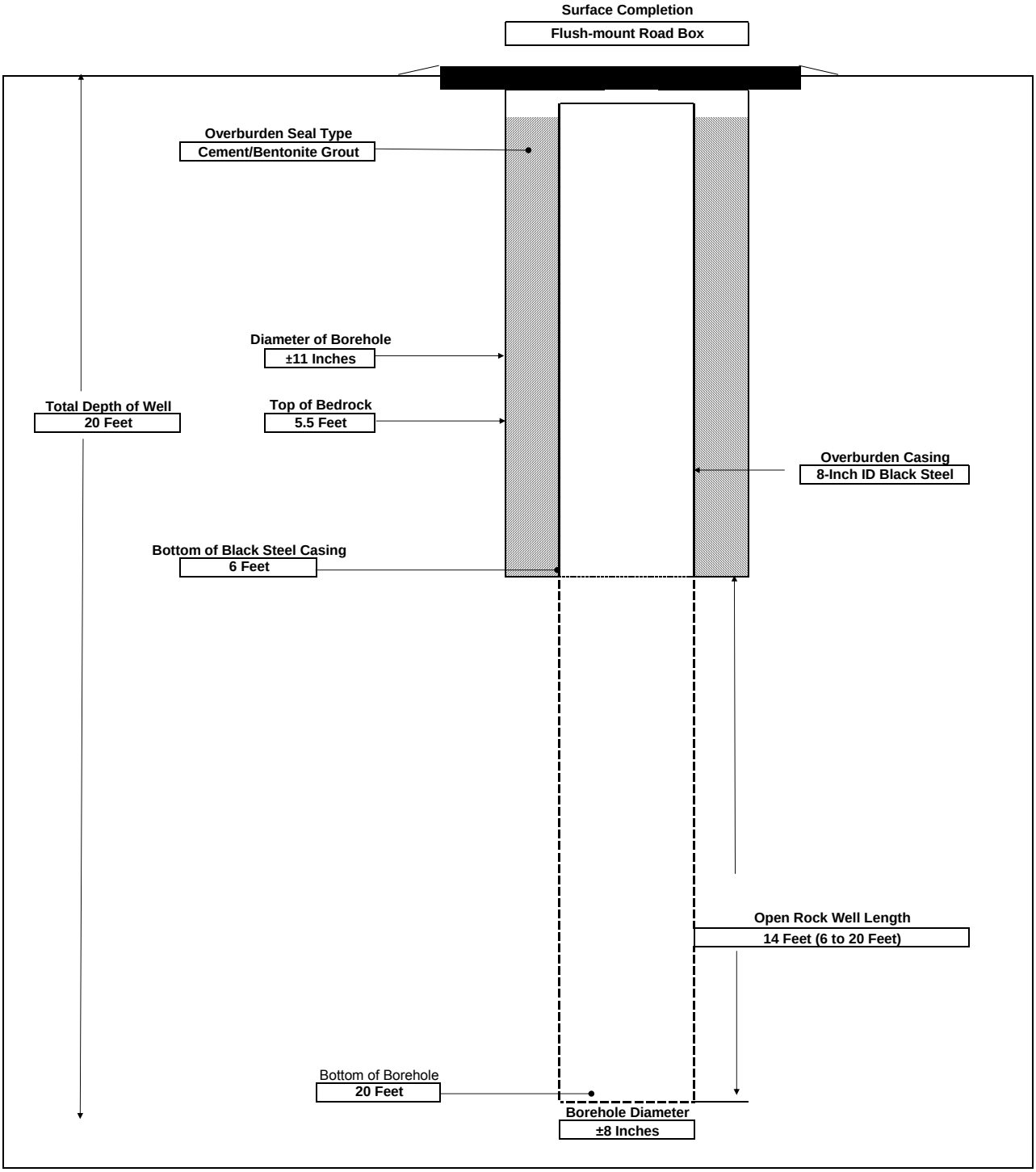

NOTE: NOT TO SCALE

LABELLA Associates, P.C.
300 STATE STREET, ROCHESTER, NEW YORK
ENVIRONMENTAL ENGINEERING CONSULTANTS

WELL CONSTRUCTION LOG
Remedial Measures NYSDEC BCP Site #C828159
690 St. Paul Street
Rochester, New York

WELL ID **TW-6**
SHEET 1 OF 1
JOB # 209280
CHKD. BY:

CONTRACTOR: NYEG
DRILLER Joel
LABELLA REPRESENTATIVE: KR Miller

WELL LOCATION: EXTERIOR SIDEWALK ENTRANCE AREA, MIDDLE OF 3 TREATMENT WELLS HERE
GROUND SURFACE ELEVATION DATUM
START DATE 7/21/2015 END DATE 7/23/2015

TYPE OF DRILL RIG: CME TRUCK-MTD.
AUGER SIZE AND TYPE 8.25-INCH HOLLOW STEM AUGERS
OVERBURDEN SAMPLING METHOD: 2-INCH SPLIT SPOON
ROCK DRILLING METHOD NOMINAL 8-INCH ROLLER BIT

WATER LEVEL DATA

DATE	TIME	WATER	REMARKS

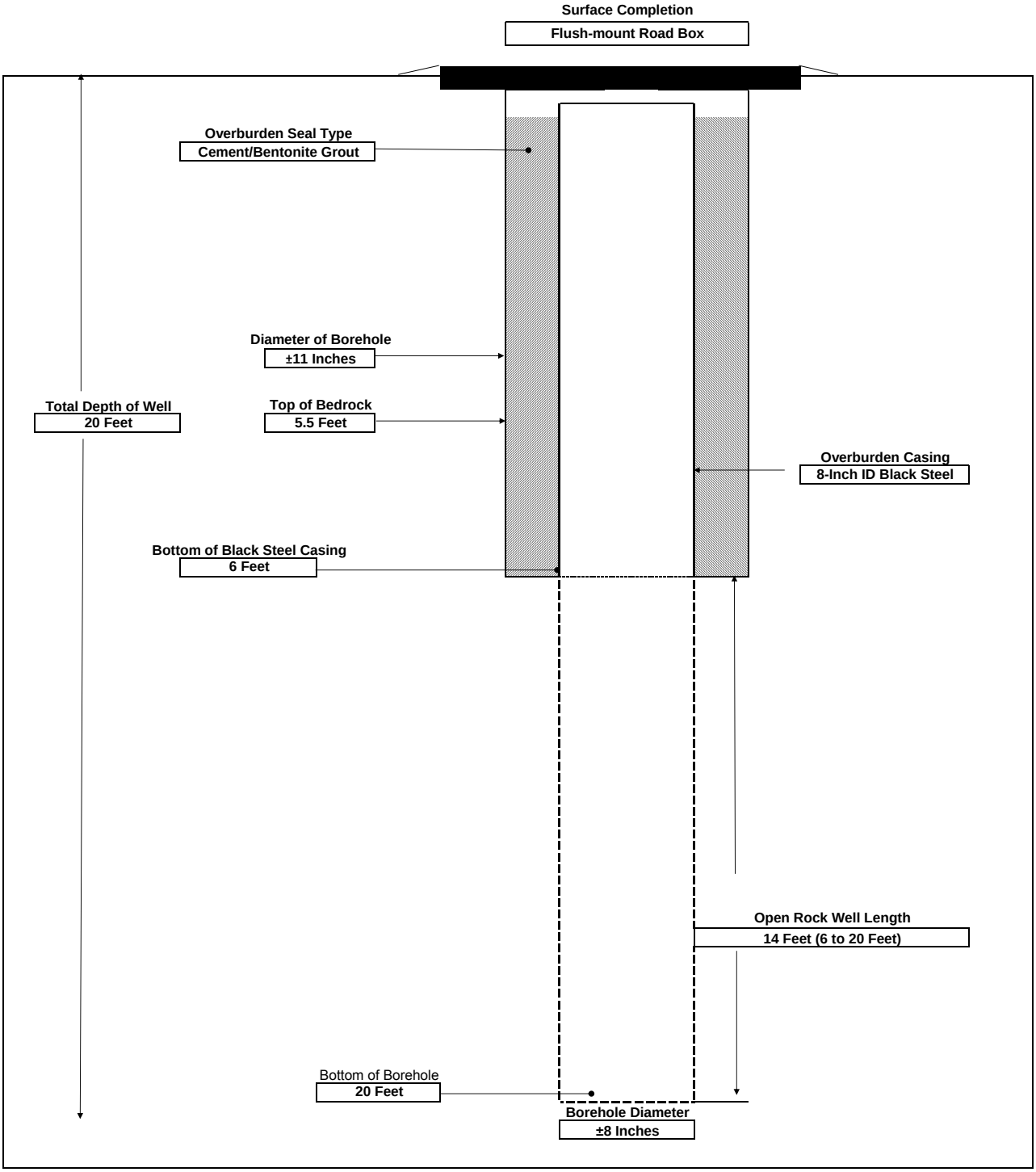

NOTE: NOT TO SCALE

LABELLA Associates, P.C.
300 STATE STREET, ROCHESTER, NEW YORK
ENVIRONMENTAL ENGINEERING CONSULTANTS

WELL CONSTRUCTION LOG
Remedial Measures NYSDEC BCP Site #C828159
690 St. Paul Street
Rochester, New York

WELL ID **TW-7**
SHEET 1 OF 1
JOB # 209280
CHKD. BY:

CONTRACTOR: NYEG
DRILLER Joel
LABELLA REPRESENTATIVE: DJK & KR Miller

WELL LOCATION: EXTERIOR SIDEWALK ENTRANCE AREA, NORTHERNMOST OF 3 TREATMENT WELLS HERE
GROUND SURFACE ELEVATION DATUM
START DATE 7/21/2015 END DATE 7/23/2015

TYPE OF DRILL RIG: CME TRUCK-MTD.
AUGER SIZE AND TYPE 8.25-INCH HOLLOW STEM AUGERS
OVERBURDEN SAMPLING METHOD: 2-INCH SPLIT SPOON
ROCK DRILLING METHOD NOMINAL 8-INCH ROLLER BIT

WATER LEVEL DATA

DATE	TIME	WATER	REMARKS

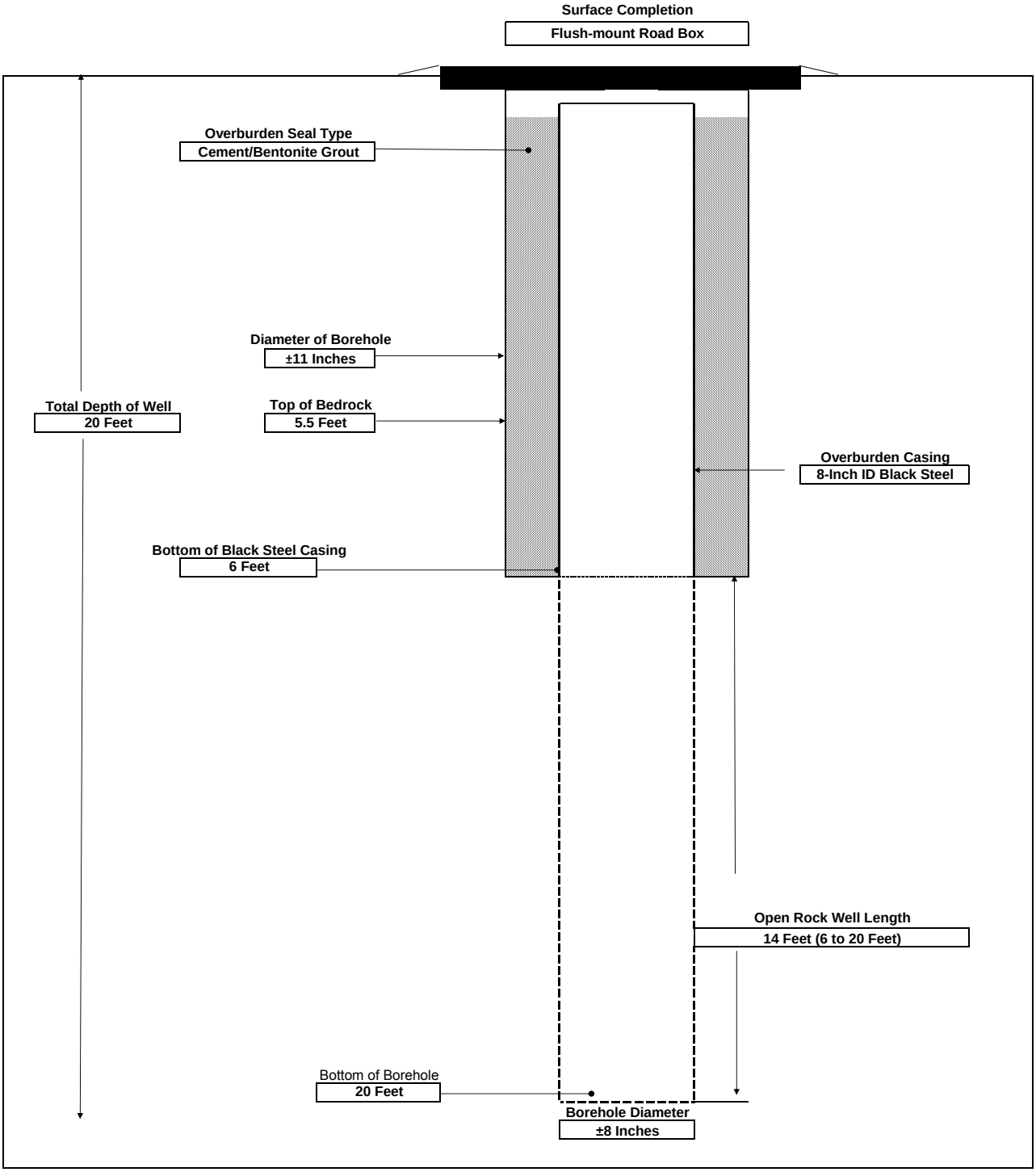

NOTE: NOT TO SCALE

LABELLA Associates, P.C.
300 STATE STREET, ROCHESTER, NEW YORK
ENVIRONMENTAL ENGINEERING CONSULTANTS

WELL CONSTRUCTION LOG
Remedial Measures NYSDEC BCP Site #C828159
690 St. Paul Street
Rochester, New York

WELL ID **TW-8**
SHEET 1 OF 1
JOB # 209280
CHKD. BY:

CONTRACTOR: NYEG
DRILLER H. Lyons
LABELLA REPRESENTATIVE: KR Miller

WELL LOCATION: INTERIOR
GROUND SURFACE ELEVATION DATUM
START DATE 7/21/2015 END DATE 7/24/2015

TYPE OF DRILL RIG: CME 45B SKID-MTD.
AUGER SIZE AND TYPE 8.25-INCH HOLLOW STEM AUGERS
OVERBURDEN SAMPLING METHOD: 2-INCH SPLIT SPOON
ROCK DRILLING METHOD NOMINAL 8-INCH ROLLER BIT

WATER LEVEL DATA

DATE	TIME	WATER	REMARKS

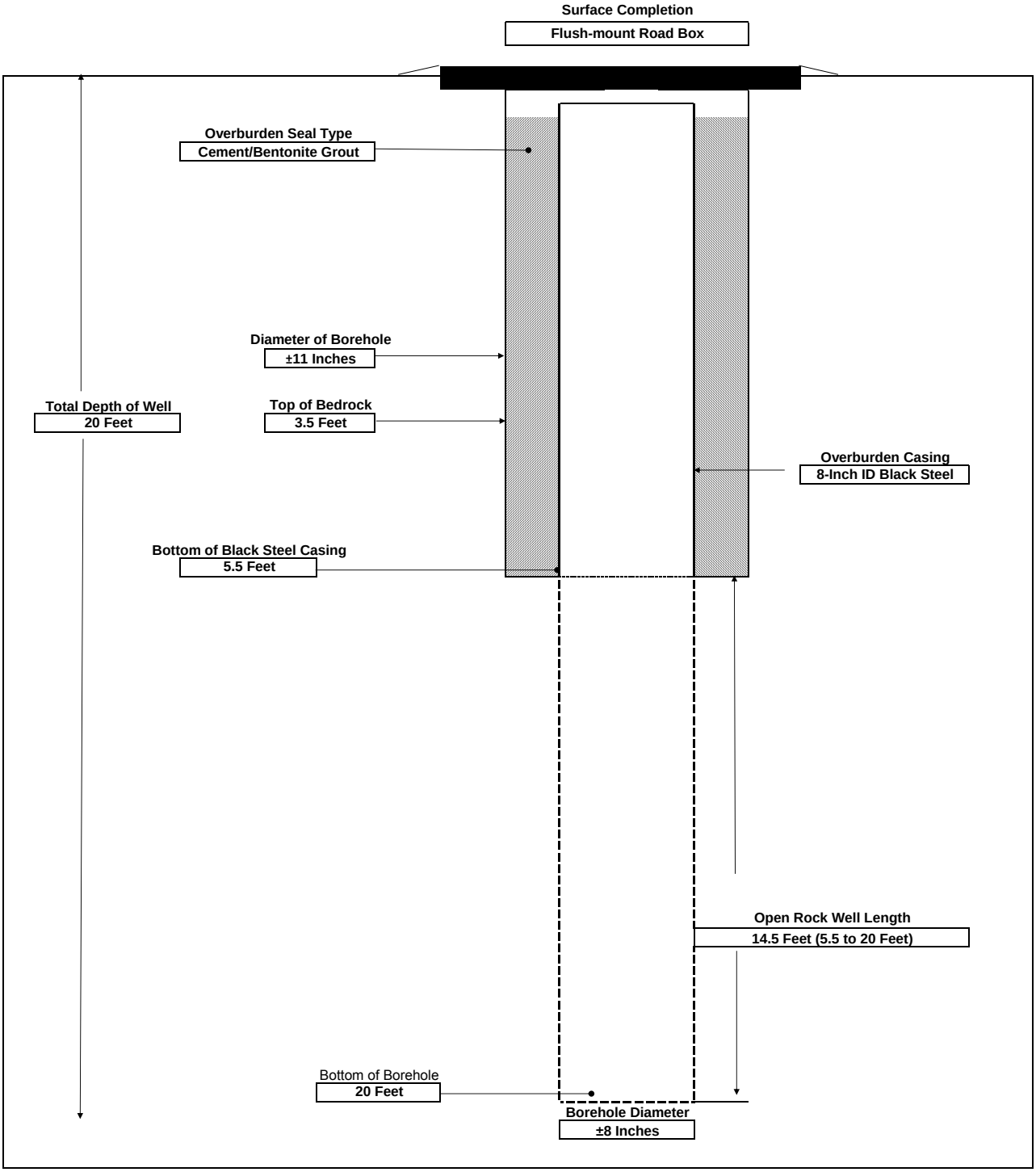

NOTE: NOT TO SCALE

LABELLA Associates, P.C.
300 STATE STREET, ROCHESTER, NEW YORK
ENVIRONMENTAL ENGINEERING CONSULTANTS

WELL CONSTRUCTION LOG
Remedial Measures NYSDEC BCP Site #C828159
690 St. Paul Street
Rochester, New York

WELL ID **TW-9A**
SHEET 1 OF 1
JOB # 209280
CHKD. BY:

CONTRACTOR: NYEG
DRILLER H. Lyons
LABELLA REPRESENTATIVE: S. Rife & KR Miller

WELL LOCATION: INTERIOR, SOUTHERNMOST OF INTERIOR TREATMENT WELLS
GROUND SURFACE ELEVATION DATUM
START DATE 7/27/2015 END DATE 7/31/2015

TYPE OF DRILL RIG: CME 45B SKID-MTD.
AUGER SIZE AND TYPE 8.25-INCH HOLLOW STEM AUGERS
OVERBURDEN SAMPLING METHOD: 2-INCH SPLIT SPOON
ROCK DRILLING METHOD NOMINAL 8-INCH ROLLER BIT

WATER LEVEL DATA

DATE	TIME	WATER	REMARKS

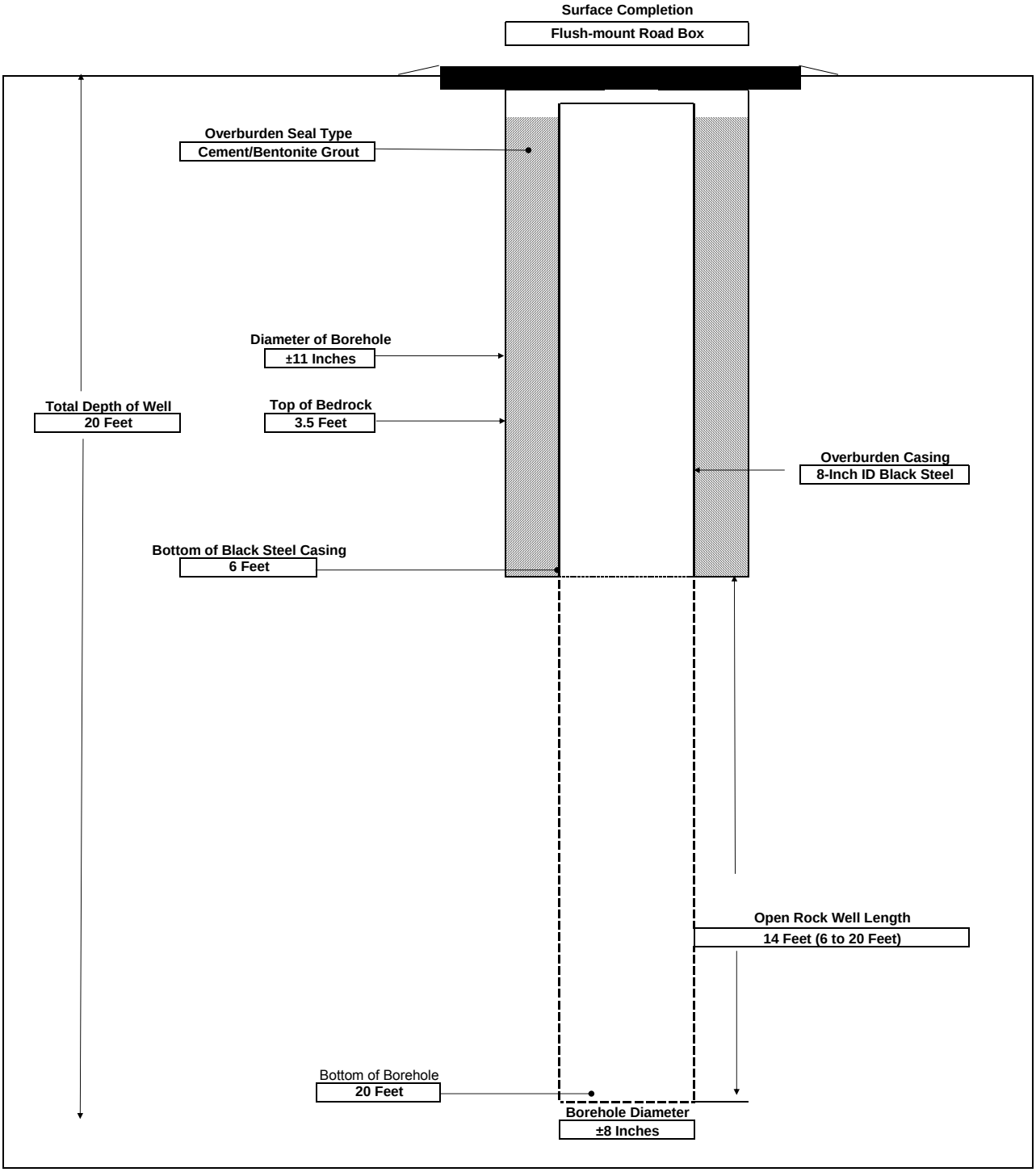

NOTE: NOT TO SCALE

LABELLA Associates, P.C.
300 STATE STREET, ROCHESTER, NEW YORK
ENVIRONMENTAL ENGINEERING CONSULTANTS

WELL CONSTRUCTION LOG
Remedial Measures NYSDEC BCP Site #C828159
690 St. Paul Street
Rochester, New York

WELL ID **TW-10**
SHEET 1 OF 1
JOB # 209280
CHKD. BY:

CONTRACTOR: NYEG
DRILLER H. Lyons
LABELLA REPRESENTATIVE: KR Miller

WELL LOCATION: INTERIOR, TO NORTHWEST OF TW-9A
GROUND SURFACE ELEVATION DATUM
START DATE 7/24/2015 END DATE 8/25/2015

TYPE OF DRILL RIG: CME 45B SKID-MTD.
AUGER SIZE AND TYPE 8.25-INCH HOLLOW STEM AUGERS
OVERBURDEN SAMPLING METHOD: 2-INCH SPLIT SPOON
ROCK DRILLING METHOD NOMINAL 8-INCH ROLLER BIT

WATER LEVEL DATA

DATE	TIME	WATER	REMARKS

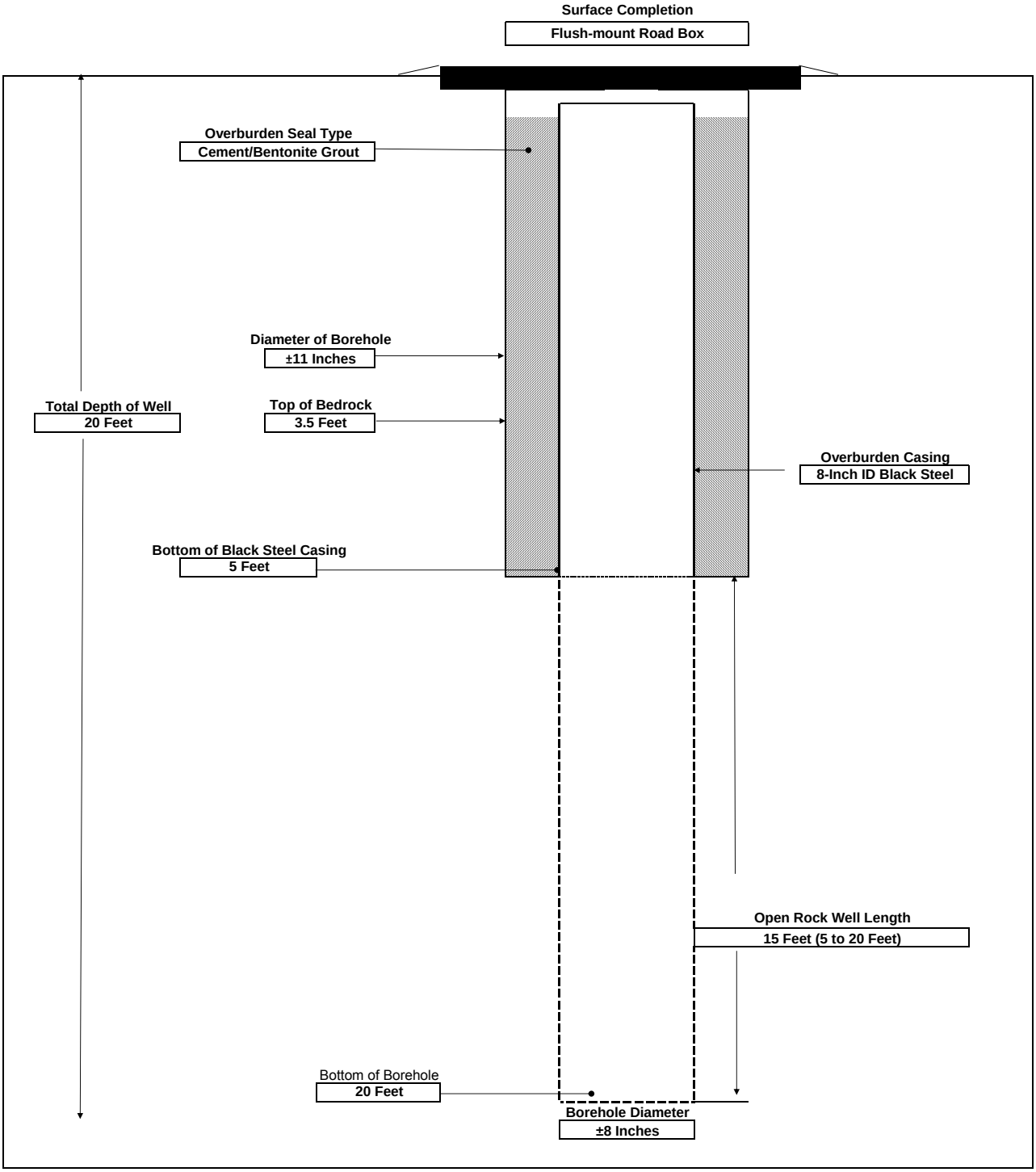

NOTE: NOT TO SCALE

LABELLA Associates, P.C.
300 STATE STREET, ROCHESTER, NEW YORK
ENVIRONMENTAL ENGINEERING CONSULTANTS

WELL CONSTRUCTION LOG
Remedial Measures NYSDEC BCP Site #C828159
690 St. Paul Street
Rochester, New York

WELL ID **TW-11**
SHEET 1 OF 1
JOB # 209280
CHKD. BY:

CONTRACTOR: NYEG
DRILLER H. Lyons
LABELLA REPRESENTATIVE: S. Rife & KR Miller

WELL LOCATION: INTERIOR
GROUND SURFACE ELEVATION DATUM
START DATE 7/24/2015 END DATE 8/25/2015

TYPE OF DRILL RIG: CME 45B SKID-MTD.
AUGER SIZE AND TYPE 8.25-INCH HOLLOW STEM AUGERS
OVERBURDEN SAMPLING METHOD: 2-INCH SPLIT SPOON
ROCK DRILLING METHOD NOMINAL 8-INCH ROLLER BIT

WATER LEVEL DATA			
DATE	TIME	WATER	REMARKS

Surface Completion
Flush-mount Road Box

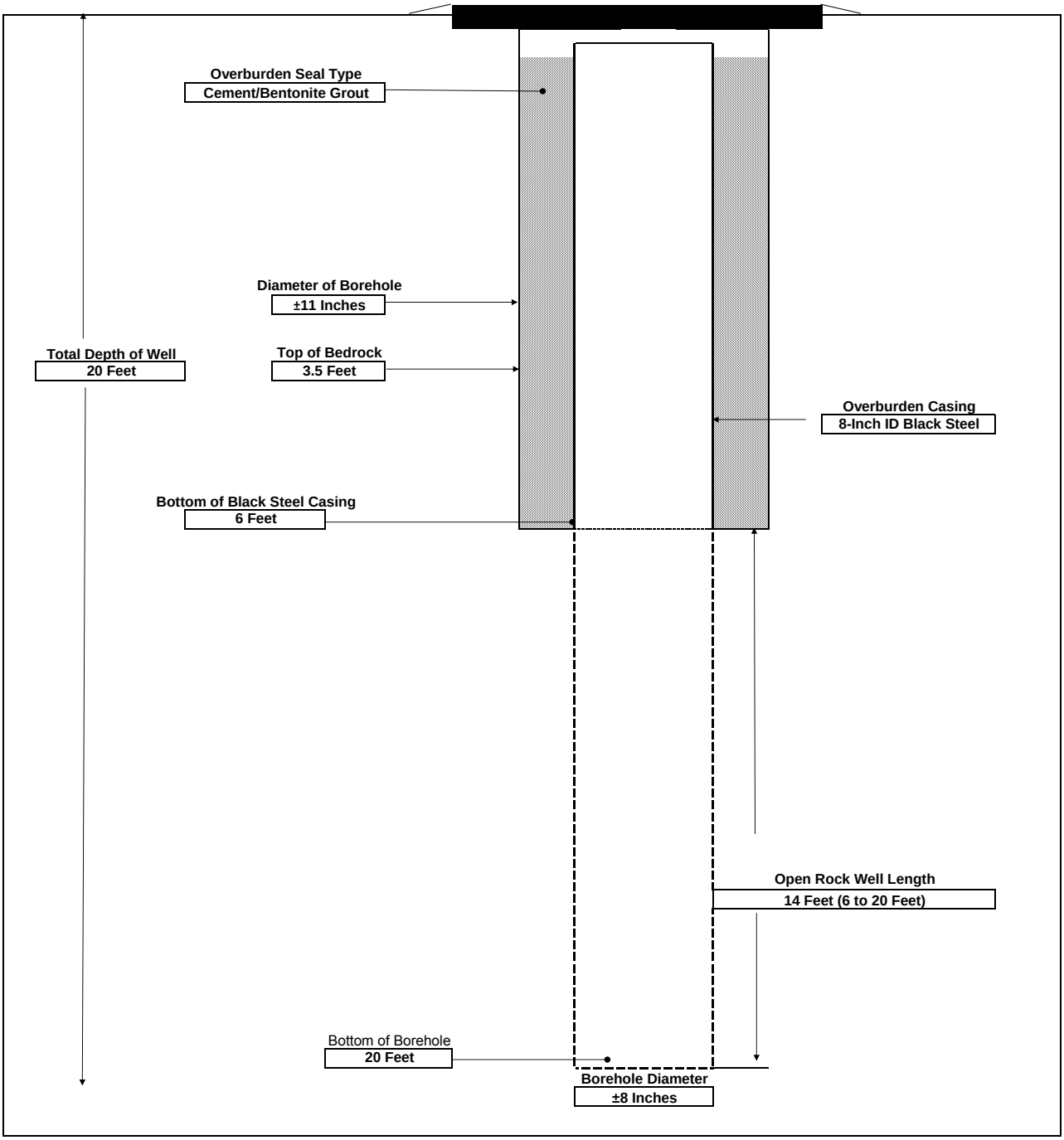

NOTE: NOT TO SCALE

LABELLA Associates, P.C.
300 STATE STREET, ROCHESTER, NEW YORK
ENVIRONMENTAL ENGINEERING CONSULTANTS

WELL CONSTRUCTION LOG
Remedial Measures NYSDEC BCP Site #C828159
690 St. Paul Street
Rochester, New York

WELL ID **TW-12**
SHEET 1 OF 1
JOB # 209280
CHKD. BY:

CONTRACTOR: NYEG
DRILLER H. Lyons
LABELLA REPRESENTATIVE: KR Miller

WELL LOCATION: INTERIOR, NORTHERNMOST OF INTERIOR TREATMENT WELLS
GROUND SURFACE ELEVATION DATUM
START DATE 8/11/2015 END DATE 8/14/2015

TYPE OF DRILL RIG: CME 45B SKID-MTD.
AUGER SIZE AND TYPE 8.25-INCH HOLLOW STEM AUGERS
OVERBURDEN SAMPLING METHOD: 2-INCH SPLIT SPOON
ROCK DRILLING METHOD NOMINAL 8-INCH ROLLER BIT

WATER LEVEL DATA

DATE	TIME	WATER	REMARKS

Surface Completion
Flush-mount Road Box

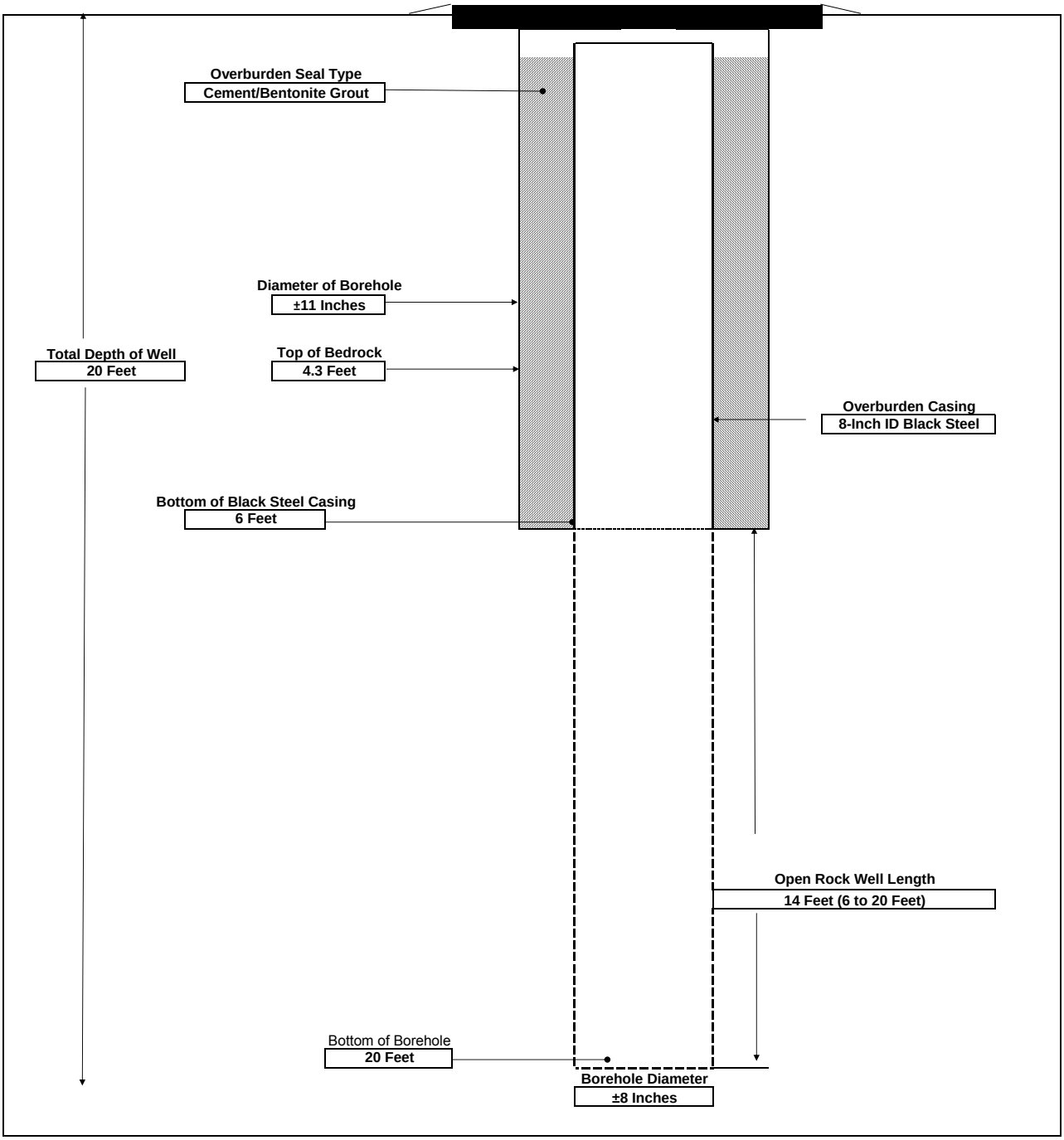

NOTE: NOT TO SCALE

LABELLA Associates, P.C. 300 STATE STREET, ROCHESTER, NEW YORK ENVIRONMENTAL ENGINEERING CONSULTANTS	**PROJECT** Remedial Measures NYSDEC BCP Site #C828159 690 St. Paul Street Rochester, New York	WELL ID **BW-19** SHEET 1 OF 1 JOB # 209280 CHKD. BY:

CONTRACTOR: NYEG	BORING LOCATION: SOUTHERNMOST IN ALLEY/LOADING DOCK AREA
DRILLER Brian G.	GROUND SURFACE ELEVATION DATUM
LABELLA REPRESENTATIVE: KR Miller	START DATE 7/8/2015 END DATE 7/15/2015
TYPE OF DRILL RIG: MOBILE B-59 TRUCK MTD.	
AUGER SIZE AND TYPE 8.25-INCH HOLLOW STEM AUGERS	
OVERBURDEN SAMPLING METHOD: 2-INCH SPLIT SPOON	
ROCK DRILLING METHOD NOMINAL 8-INCH ROLLER BIT	

WATER LEVEL DATA

DATE	TIME	WATER	REMARKS

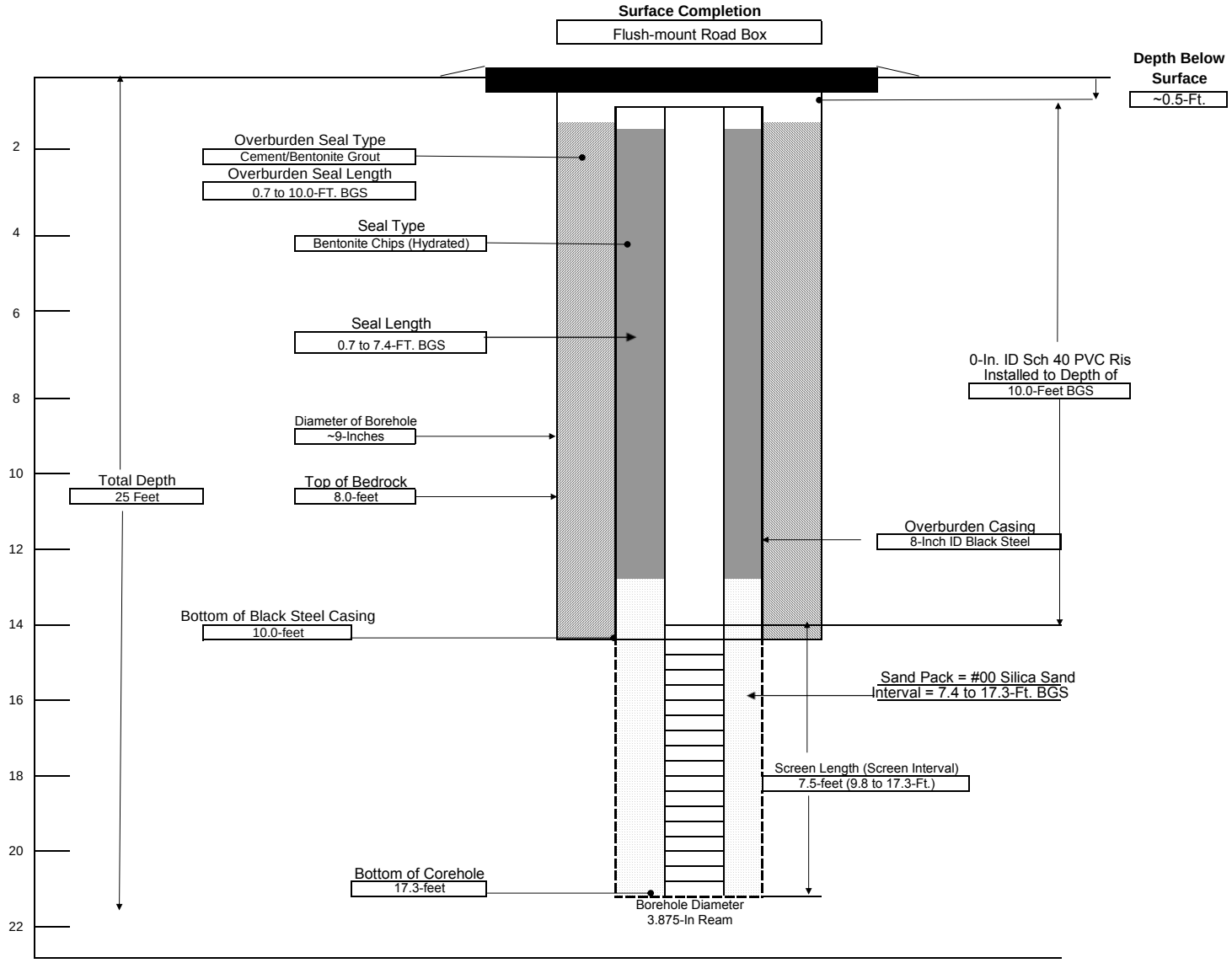

NOTE ALL DIMENSIONS IN FEET UNLESS OTHERWISE INDICATED

GENERAL NOTES:

1) STRATIFICATION LINES REPRESENT APPROXIMATE BOUNDARY BETWEEN SOIL TYPES, TRANSITIONS MAY BE GRADUAL
2) WATER LEVEL READINGS HAVE BEEN MADE AT TIMES AND UNDER CONDITIONS STATED, FLUCTUATIONS OF GROUNDWATER MAY OCCUR DUE TO OTHER FACTORS THAN THOSE PRESENT AT THE TIME MEASUREMENTS WERE MADE.

LABELLA Associates, P.C. 300 STATE STREET, ROCHESTER, NEW YORK ENVIRONMENTAL ENGINEERING CONSULTANTS	PROJECT 690 Saint Paul Street Rochester, New York BCP Site #C828159 IRM - AOC #2 & #6: Former Foundry & General Site/Miscellaneous Areas	BORING: MW-09 SHEET 1 OF 1 JOB # CHKD. BY:

CONTRACTOR: Nothnagle
DRILLER: Neal Short
LABELLA REPRESENTATIVE: J. Gillen
BORING LOCATION: AOC #2
GROUND SURFACE ELEVATION: N/A DATUM: N/A
START DATE: 10/20/2012 END DATE: 10/20/2012

TYPE OF DRILL RIG:
AUGER SIZE AND TYPE: N/A
OVERBURDEN SAMPLING METHOD:
ROCK DRILLING METHOD: N/A

WATER LEVEL DATA

DATE	TIME	WATER	CASING	REMARKS
10/20/2012	10:05	6.07'		
10/22/2012	16:45	6.09'		

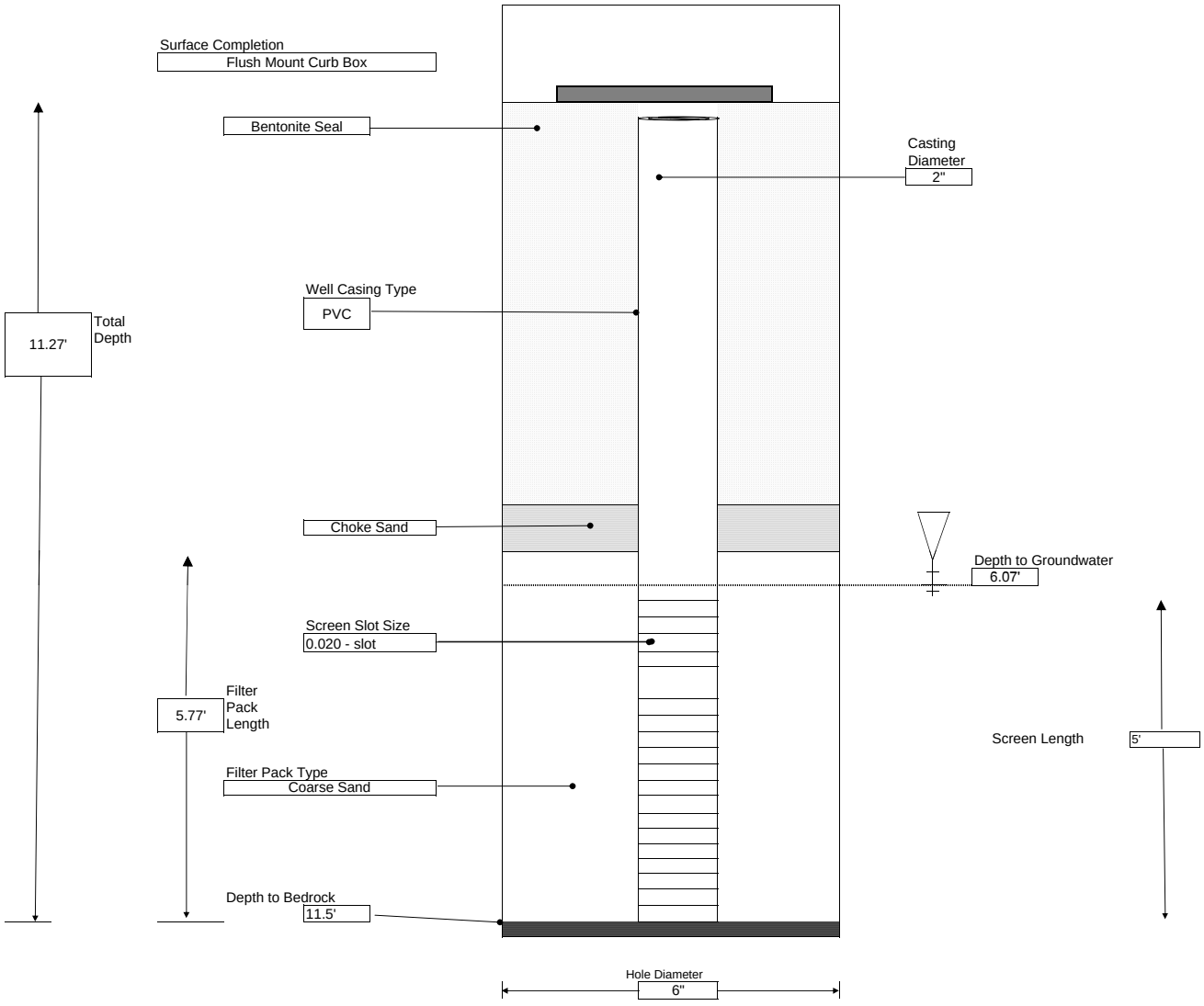

LABELLA Associates, P.C. 300 STATE STREET, ROCHESTER, NEW YORK ENVIRONMENTAL ENGINEERING CONSULTANTS	PROJECT 690 Saint Paul Street Rochester, New York BCP Site #C828159 IRM - AOC #2 & #6: Former Foundry & General Site/Miscellaneous Areas	BORING: MW-10 SHEET 1 OF 1 JOB # CHKD. BY:

CONTRACTOR: Nothnagle
DRILLER: Neal Short
LABELLA REPRESENTATIVE: J. Gillen
BORING LOCATION: AOC #2
GROUND SURFACE ELEVATION: N/A DATUM: N/A
START DATE: 10/20/2012 END DATE: 10/20/2012

TYPE OF DRILL RIG:
AUGER SIZE AND TYPE: N/A
OVERBURDEN SAMPLING METHOD:
ROCK DRILLING METHOD: N/A

WATER LEVEL DATA

DATE	TIME	WATER	CASING	REMARKS
10/20/2012	11:15	9.96'		
10/22/2012	16:40	7.14'		

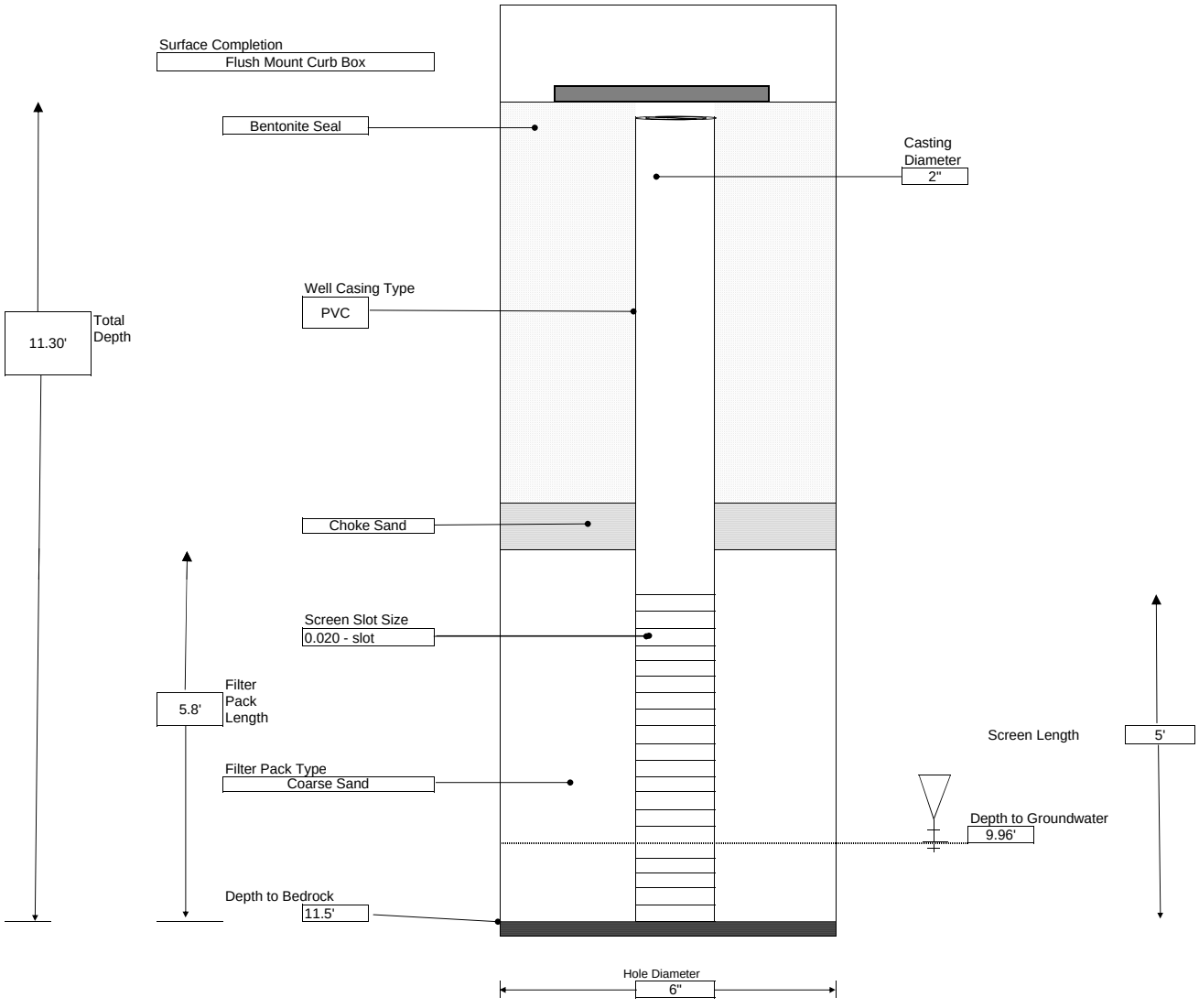

LABELLA Associates, P.C. 300 STATE STREET, ROCHESTER, NEW YORK ENVIRONMENTAL ENGINEERING CONSULTANTS	PROJECT 690 Saint Paul Street Rochester, New York BCP Site #C828159 IRM - AOC #2 & #6: Former Foundry & General Site/Miscellaneous Areas	BORING: MW-11 SHEET 1 OF 1 JOB # CHKD. BY:

CONTRACTOR: Op-Tech
DRILLER:
LABELLA REPRESENTATIVE: K. Miller
TYPE OF DRILL RIG:
AUGER SIZE AND TYPE: N/A
OVERBURDEN SAMPLING METHOD:
ROCK DRILLING METHOD: N/A

BORING LOCATION: AOC #6D
GROUND SURFACE ELEVATION: N/A DATUM: N/A
START DATE: 8/21/2012 END DATE: 8/21/2012

WATER LEVEL DATA

DATE	TIME	WATER	CASING	REMARKS
11/1/2012	15:00	6.71'		

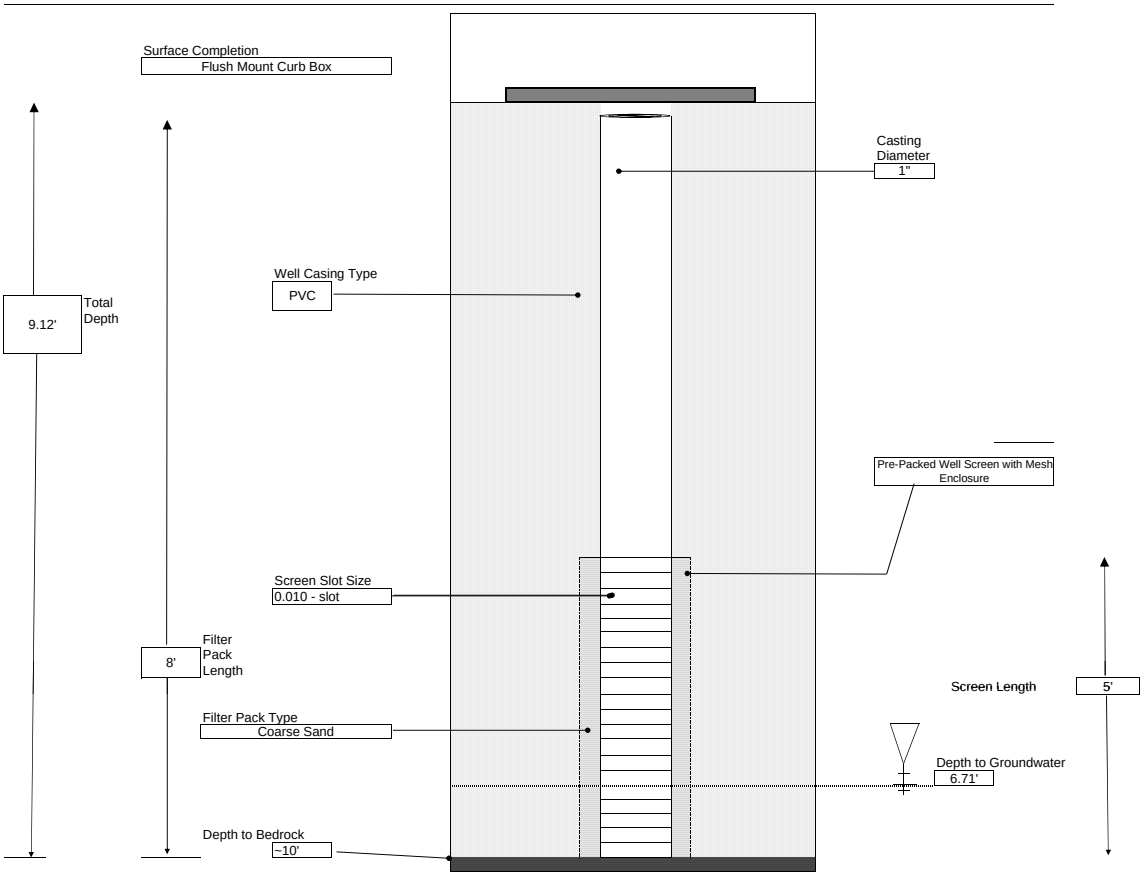

LABELLA Associates, P.C.

MONITORING WELL INSTALLATION REPORT

MONITORING WELL ID: **MW- 1**

Project:	690 Saint Paul Street	LaBella Project No.:	208492
Location:		LaBella Representative:	J. Caswell
Client:	Genesee Valley Real Estate Co.	Date Installed:	7/18/2008
Contractor(s):	TREC Environmental	Time:	8:17am to
Driller:	P. Willey	Type of Drill Rig:	Truck Mounted Geoprobe
Rock Coring Method:		Auger size and type:	

Ground El.: Not Applicable | Location: SEE PLAN | Depth to bedrock: 8.0 Feet

BOREHOLE BACKFILL

(Numbers refer to depth from ground surface in feet)

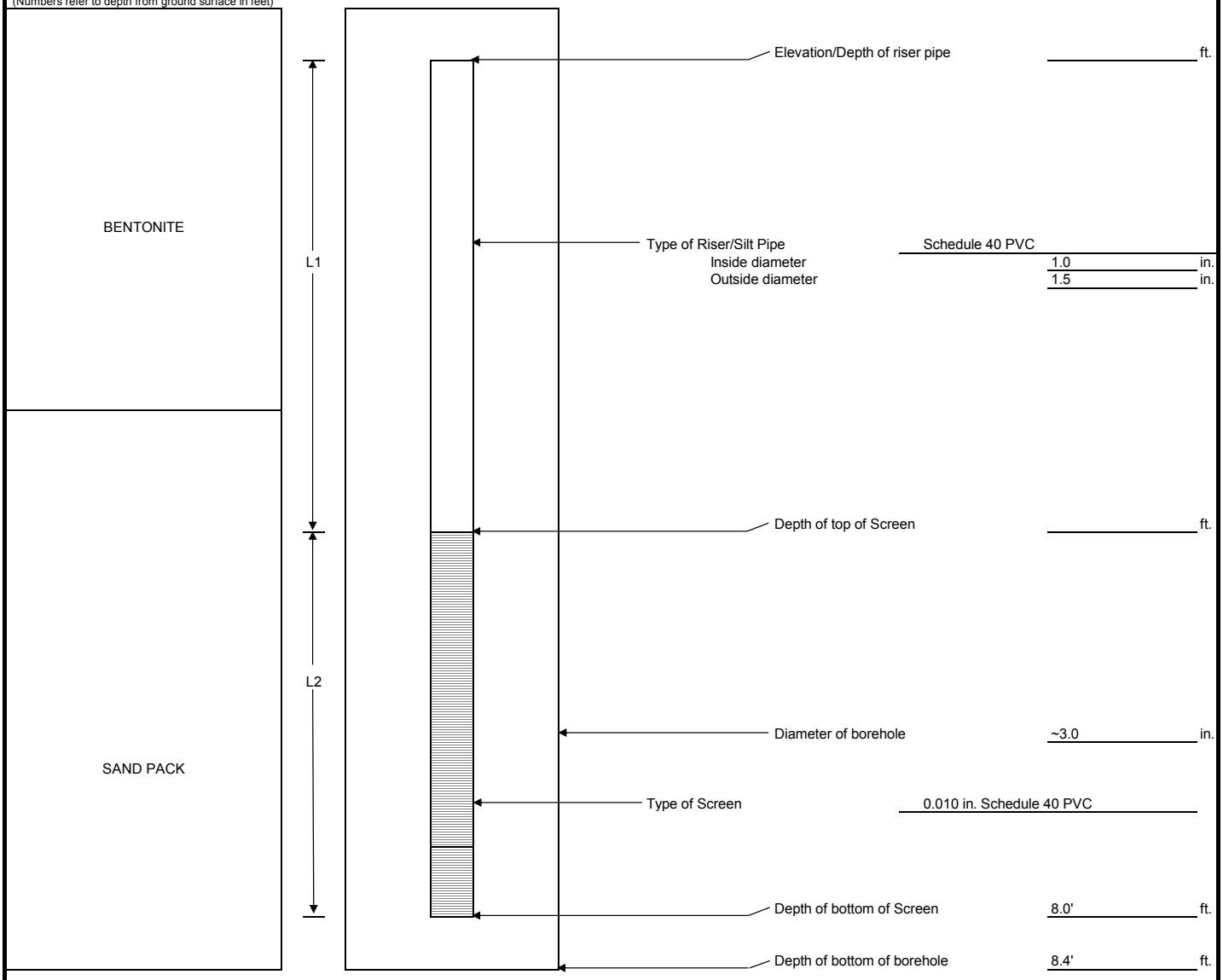

ft.	+	ft.	=	0.0	ft.
Riser Length (L1)		Length of Screen (L2)		Total Lemgth	

NOTES:

LABELLA Associates, P.C.

MONITORING WELL INSTALLATION REPORT

MONITORING WELL ID: **MW- 2**

Project:	690 Saint Paul Street	LaBella Project No.:	208492
Location:		LaBella Representative:	J. Cawell
Client:	Genesee Valley Real Estate Co.	Date Installed:	7/18/2008
Contractor(s):	TREC Environmental	Time:	9:15am to
Driller:	P. Willey	Type of Drill Rig:	Truck Mounted Geoprobe
Rock Coring Method:		Auger size and type:	

Ground El.: Not Applicable | Location: SEE PLAN | Depth to bedrock: 8 feet

BOREHOLE BACKFILL

(Numbers refer to depth from ground surface in feet)

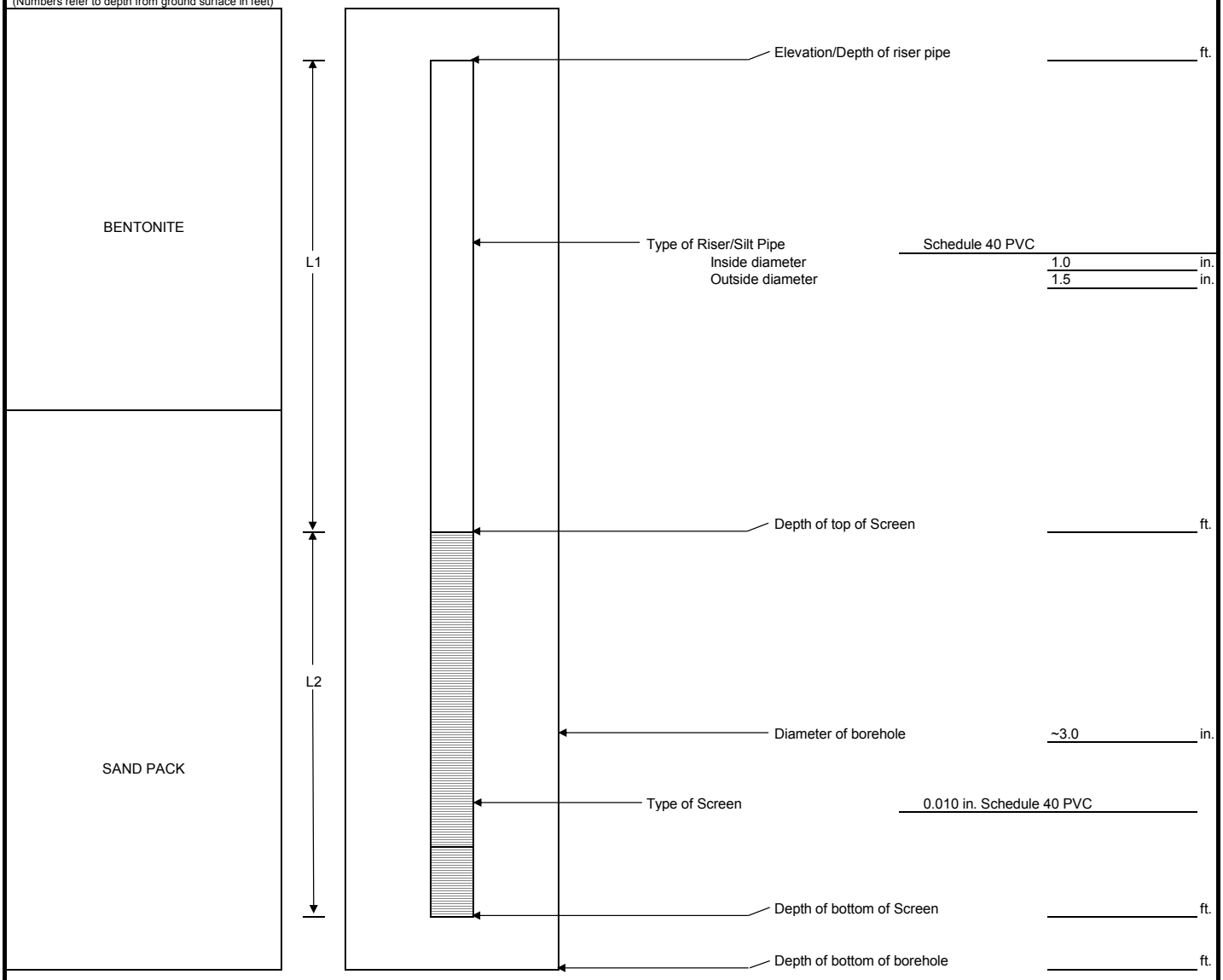

ft.	+	ft.	=	0.0 ft.
Riser Length (L1)		Length of Screen (L2)		Total Lemgth

NOTES:

LABELLA Associates, P.C.

MONITORING WELL INSTALLATION REPORT

MONITORING WELL ID: **MW-3**

Project:	690 Saint Paul Street	LaBella Project No.:	208492
Location:		LaBella Representative:	J. Caswell
Client:	Genesse Vallet Real Estate Co.	Date Installed:	7/18/2008
Contractor(s):	TREC Environmental	Time:	to
Driller:	P. Willey	Type of Drill Rig:	Truck Mounted Geoprobe
Rock Coring Method:		Auger size and type:	

Ground El.: Not Applicable | Location: SEE PLAN | Depth to bedrock: 8.0 Feet

BOREHOLE BACKFILL

(Numbers refer to depth from ground surface in feet)

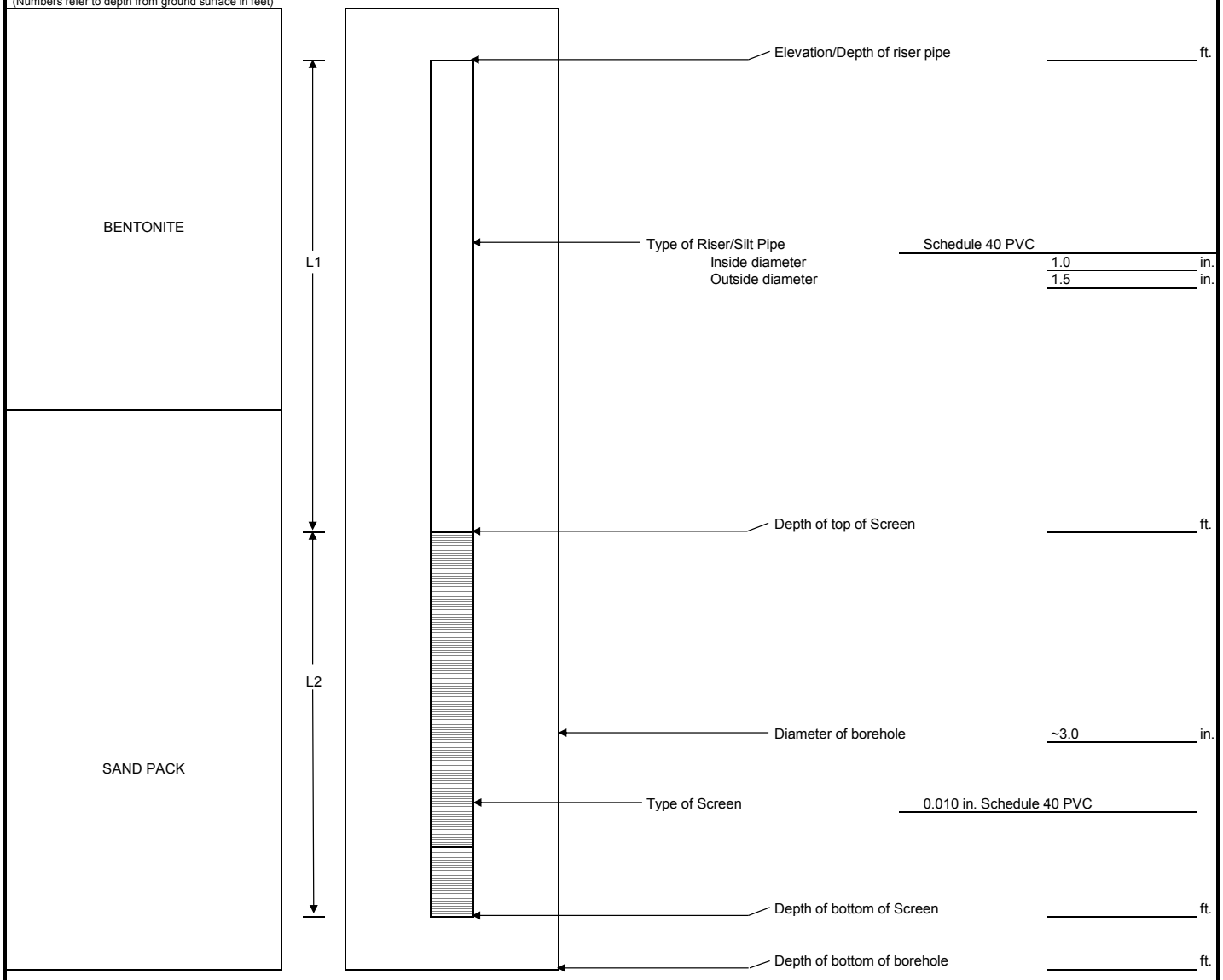

ft.	+	ft.	=	0.0 ft.
Riser Length (L1)		Length of Screen (L2)		Total Lemgth

NOTES:

LABELLA Associates, P.C.

MONITORING WELL INSTALLATION REPORT

MONITORING WELL ID: **MW- 4**

Project:	690 Saint Paul Street	LaBella Project No.:	208492
Location:		LaBella Representative:	J. Caswell
Client:	Genesee Valley Real Estate Co.	Date Installed:	7/18/2008
Contractor(s):	TREC Environmental	Time:	13:00 to
Driller:	P. Willey	Type of Drill Rig:	Truck Mounted Geoprobe
Rock Coring Method:		Auger size and type:	

Ground El.: Not Applicable | Location: SEE PLAN | Depth to bedrock: 8.0 Feet

BOREHOLE BACKFILL

(Numbers refer to depth from ground surface in feet)

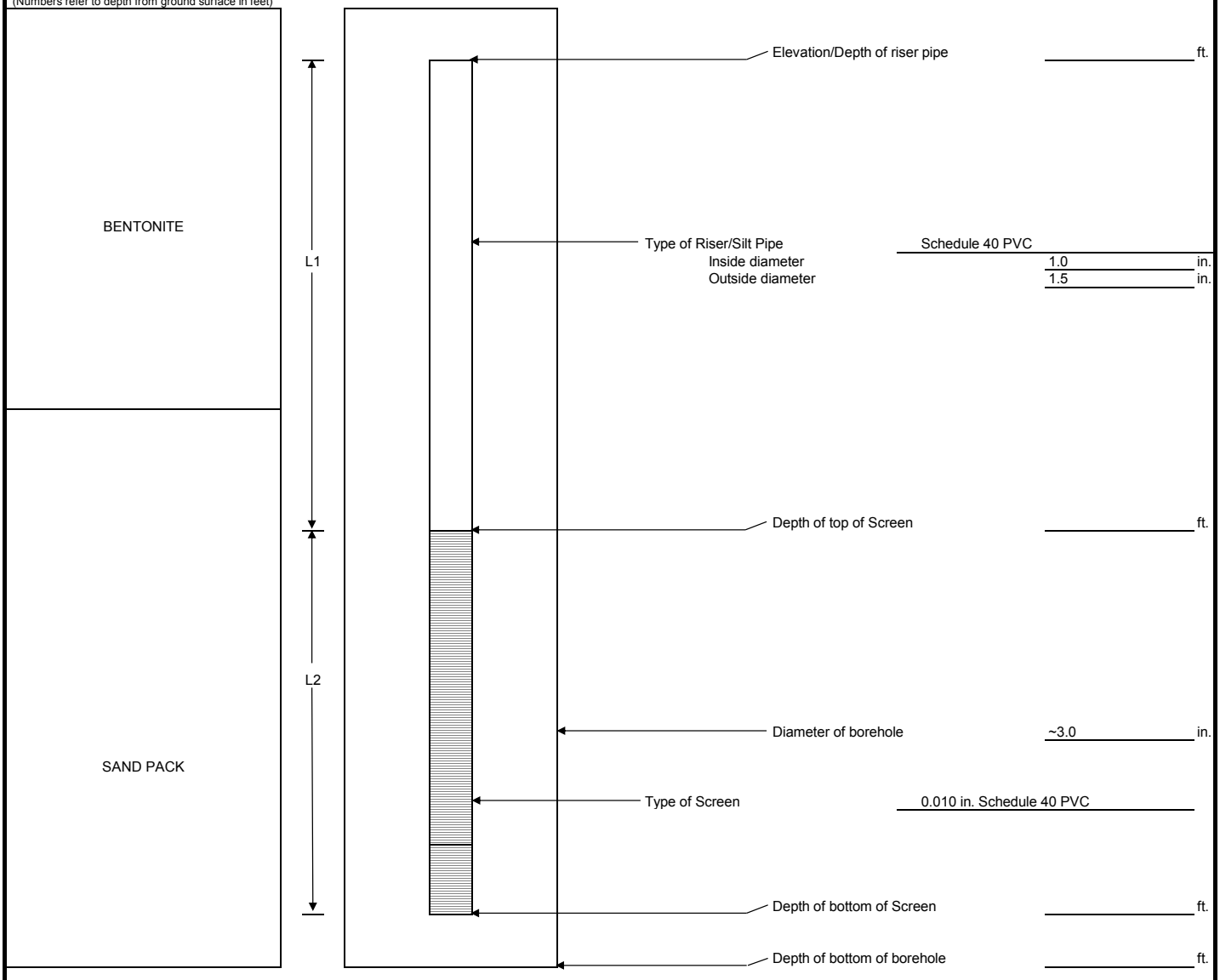

ft.	+	ft.	=	0.0 ft.
Riser Length (L1)		Length of Screen (L2)		Total Lemgth

NOTES:

LABELLA Associates, P.C.

MONITORING WELL INSTALLATION REPORT

MONITORING WELL ID
MW-5

Project:	690 Saint Paul Street	LaBella Project No.:	209280
Location:		LaBella Representative:	E. Dumrese
Client:	Genesee Valley Real Estate Co.	Date Installed:	22-Jun-10
Contractor(s):	TREC Environmental	Time:	to
Driller:	M. Ellingworth	Type of Drill Rig:	Track Mounted Geoprobe
Rock Coring Method:		Auger size and type:	

Ground El.: Location: SEE PLAN Depth to bedrock: ε 11.7'

BOREHOLE BACKFILL

(Numbers refer to depth from ground surface in feet)

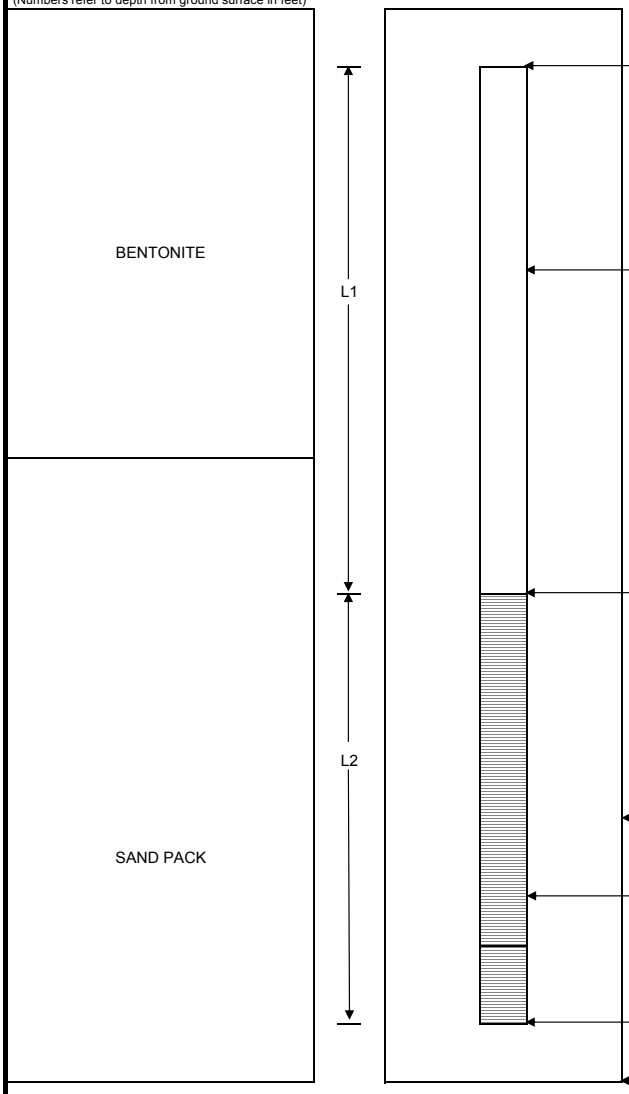

Elevation/Depth of riser pipe	~0.5'	ft.
Type of Riser/Silt Pipe	Schedule 40 PVC	
Inside diameter	1.0	in.
Outside diameter	1.5	in.
Depth of top of Screen	6.7'	ft.
Diameter of borehole	~3.0	in.
Type of Screen	0.010 in. Schedule 40 PVC	
Depth of bottom of Screen	11.7'	ft.
Depth of bottom of borehole	11.7'	ft.

6.7'	ft.	+	5.0'	ft. =	11.7' ft.
Riser Length (L1)			Length of Screen (L2)		Total Lemgth

NOTES:

LABELLA Associates, P.C.

MONITORING WELL INSTALLATION REPORT

MONITORING WELL ID
MW-6

Project:	690 Saint Paul Street	LaBella Project No.:	209280
Location:		LaBella Representative:	E. Dumrese
Client:	Genesee Valley Real Estate Co.	Date Installed:	22-Jun-10
Contractor(s):	TREC Environmental	Time:	to
Driller:	M. Ellingworth	Type of Drill Rig:	Track Mounted Geoprobe
Rock Coring Method:		Auger size and type:	

Ground El.: _____ Location: SEE PLAN Depth to bedrock: ε 11.7'

BOREHOLE BACKFILL

(Numbers refer to depth from ground surface in feet)

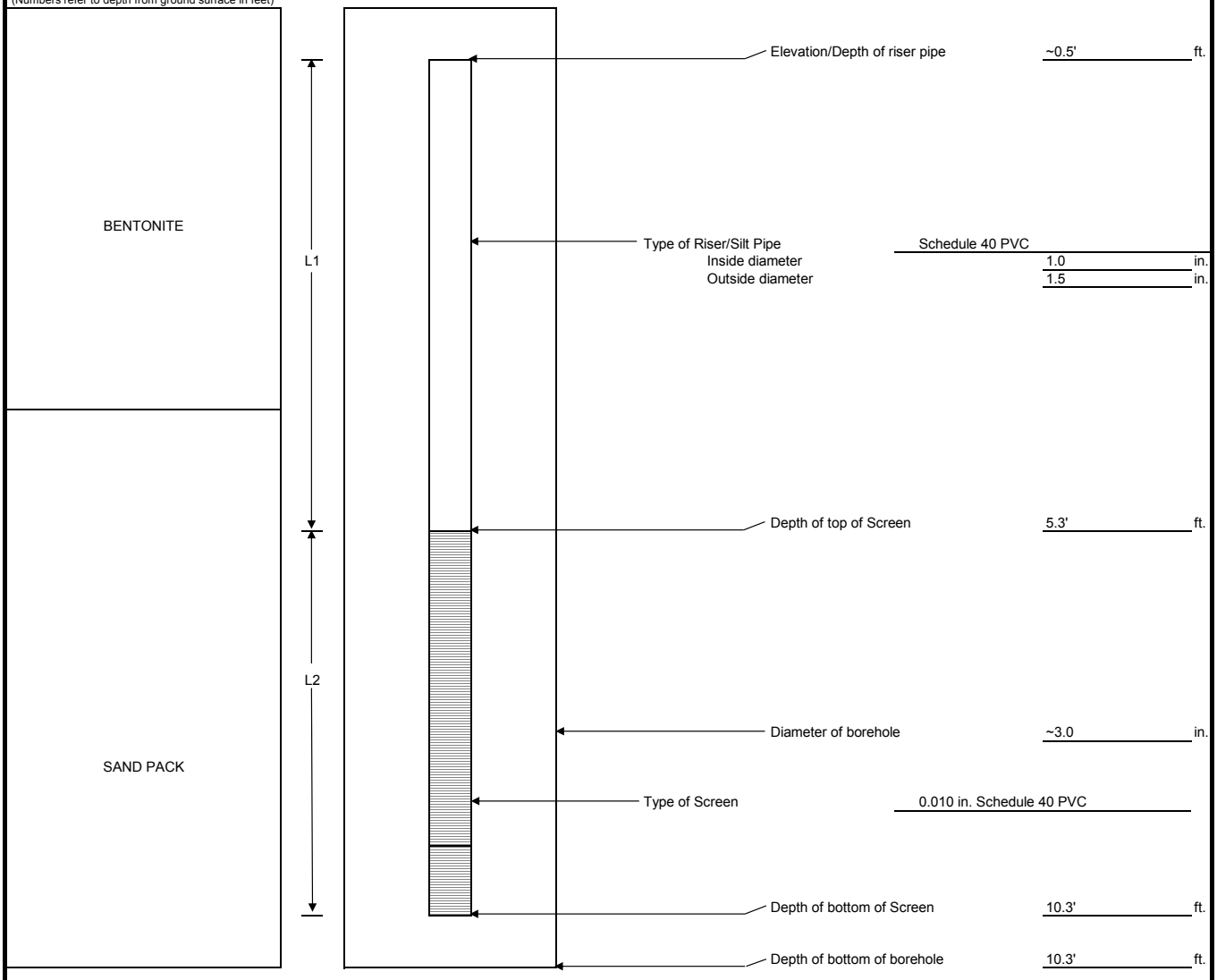

5.3' ft.	+	5.0' ft.	=	10.3' ft.
Riser Length (L1)		Length of Screen (L2)		Total Lemgth

NOTES:

LABELLA Associates, D.P.C. 300 STATE STREET, ROCHESTER, NEW YORK ENVIRONMENTAL ENGINEERING CONSULTANTS	**Appendix 5** PROJECT Design Phase Investigation - AOC #6C NAPL Area 690 Saint Paul Street, Rochester, New York	BORING: BW-14 SHEET 1 OF 1 JOB # 209280 CHKD. BY: JMG

CONTRACTOR: Parratt Wolff
DRILLER:
LABELLA REPRESENTATIVE: M Winderl

BORING LOCATION: AOC #6C
GROUND SURFACE ELEVATION: N/A DATUM: N/A
START DATE: 2/26/2015 END DATE: 2/27/2015

TYPE OF DRILL RIG:
AUGER SIZE AND TYPE: Hollow-Stem; 6.25" Inner Diameter
OVERBURDEN SAMPLING METHOD: Direct-Push
ROCK DRILLING METHOD: NX Core Barrel

WATER LEVEL DATA				
DATE	TIME	WATER	CASING	REMARKS

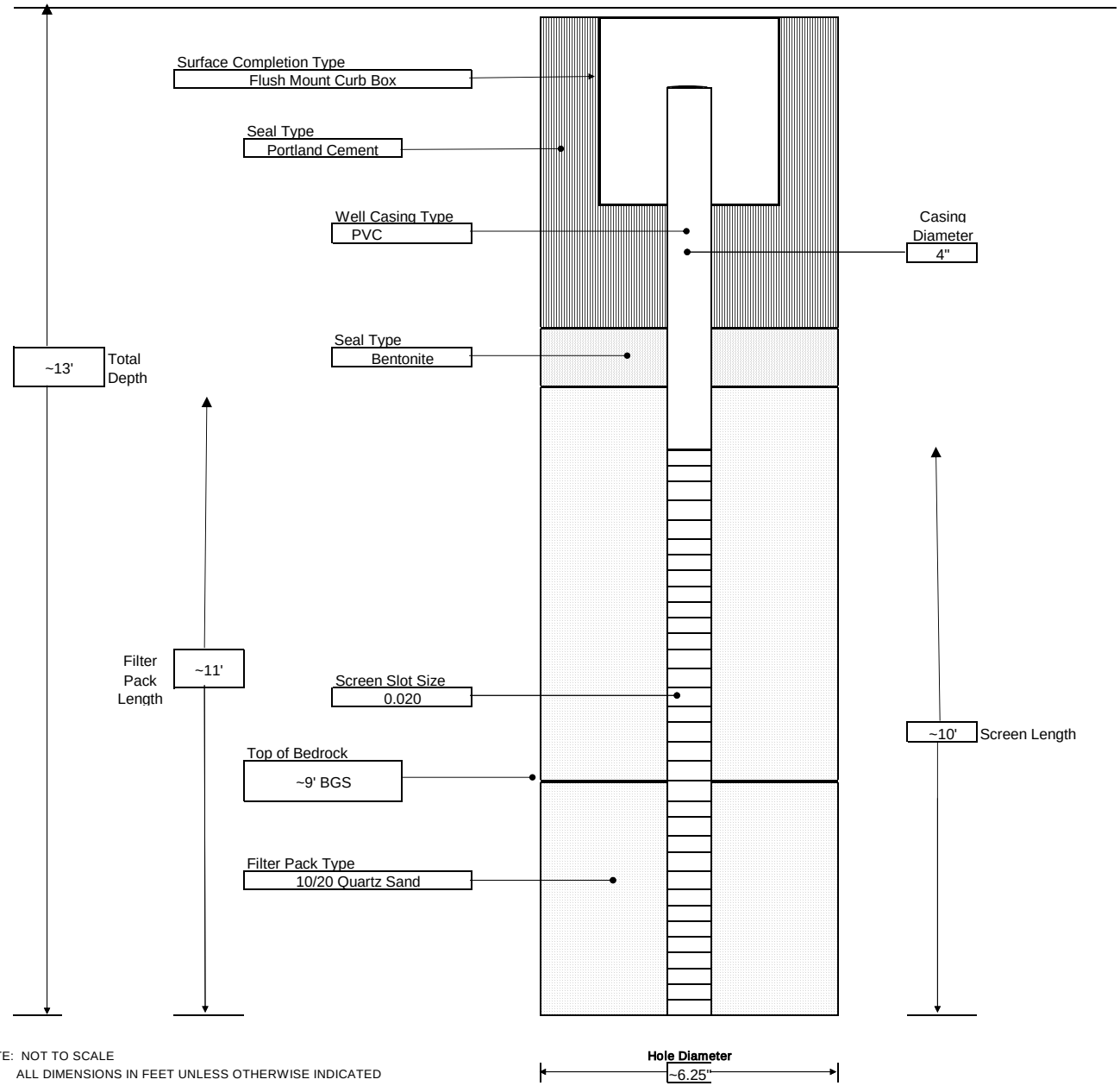

NOTE: NOT TO SCALE
ALL DIMENSIONS IN FEET UNLESS OTHERWISE INDICATED

GENERAL NOTES:
1) STRATIFICATION LINES REPRESENT APPROXIMATE BOUNDARY BETWEEN SOIL TYPES, TRANSITIONS MAY BE GRADUAL
2) THE ABOVE IS THE PROPOSED DESIGN FOR THREE WELLS IN AOC #6C; DEPTHS MAY VARY SLIGHTLY BASED ON FIELD CONDITIONS.

LABELLA Associates, D.P.C. 300 STATE STREET, ROCHESTER, NEW YORK ENVIRONMENTAL ENGINEERING CONSULTANTS	**FIGURE 5** PROJECT Design Phase Investigation - AOC #6C NAPL Area 690 Saint Paul Street, Rochester, New York	BORING: BW-15 SHEET 1 OF 1 JOB # 209280 CHKD. BY: JMG

CONTRACTOR: Parratt Wolff
DRILLER:
LABELLA REPRESENTATIVE: M Winderl

BORING LOCATION: AOC #6C
GROUND SURFACE ELEVATION: N/A DATUM: N/A
START DATE: 2/26/2015 END DATE: 2/27/2015

TYPE OF DRILL RIG:
AUGER SIZE AND TYPE: Hollow-Stem; 6.25" Inner Diameter
OVERBURDEN SAMPLING METHOD: Direct-Push
ROCK DRILLING METHOD: NX Core Barrel

WATER LEVEL DATA				
DATE	TIME	WATER	CASING	REMARKS

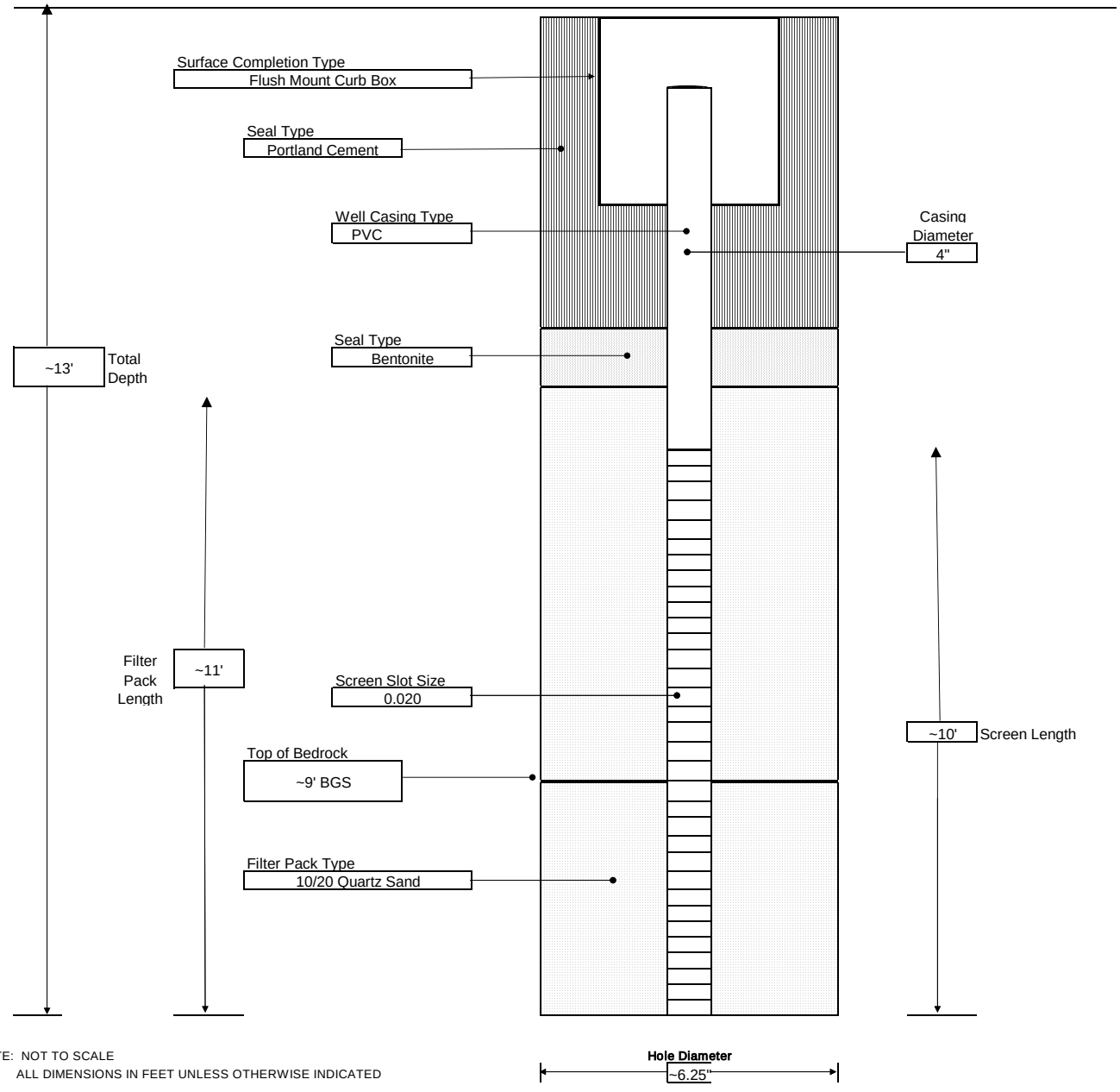

NOTE: NOT TO SCALE
ALL DIMENSIONS IN FEET UNLESS OTHERWISE INDICATED

GENERAL NOTES:
1) STRATIFICATION LINES REPRESENT APPROXIMATE BOUNDARY BETWEEN SOIL TYPES, TRANSITIONS MAY BE GRADUAL
2) THE ABOVE IS THE PROPOSED DESIGN FOR THREE WELLS IN AOC #6C; DEPTHS MAY VARY SLIGHTLY BASED ON FIELD CONDITIONS.

LABELLA Associates, D.P.C. 300 STATE STREET, ROCHESTER, NEW YORK ENVIRONMENTAL ENGINEERING CONSULTANTS	**FIGURE 5** PROJECT Design Phase Investigation - AOC #6C NAPL Area 690 Saint Paul Street, Rochester, New York	BORING: BW-16 SHEET 1 OF 1 JOB # 209280 CHKD. BY: JMG

CONTRACTOR: Parratt Wolff
DRILLER:
LABELLA REPRESENTATIVE: M Winderl

BORING LOCATION: AOC #6C
GROUND SURFACE ELEVATION: N/A DATUM: N/A
START DATE: 2/26/2015 END DATE: 2/27/2015

TYPE OF DRILL RIG:
AUGER SIZE AND TYPE: Hollow-Stem; 6.25" Inner Diameter
OVERBURDEN SAMPLING METHOD: Direct-Push
ROCK DRILLING METHOD: NX Core Barrel

WATER LEVEL DATA				
DATE	TIME	WATER	CASING	REMARKS

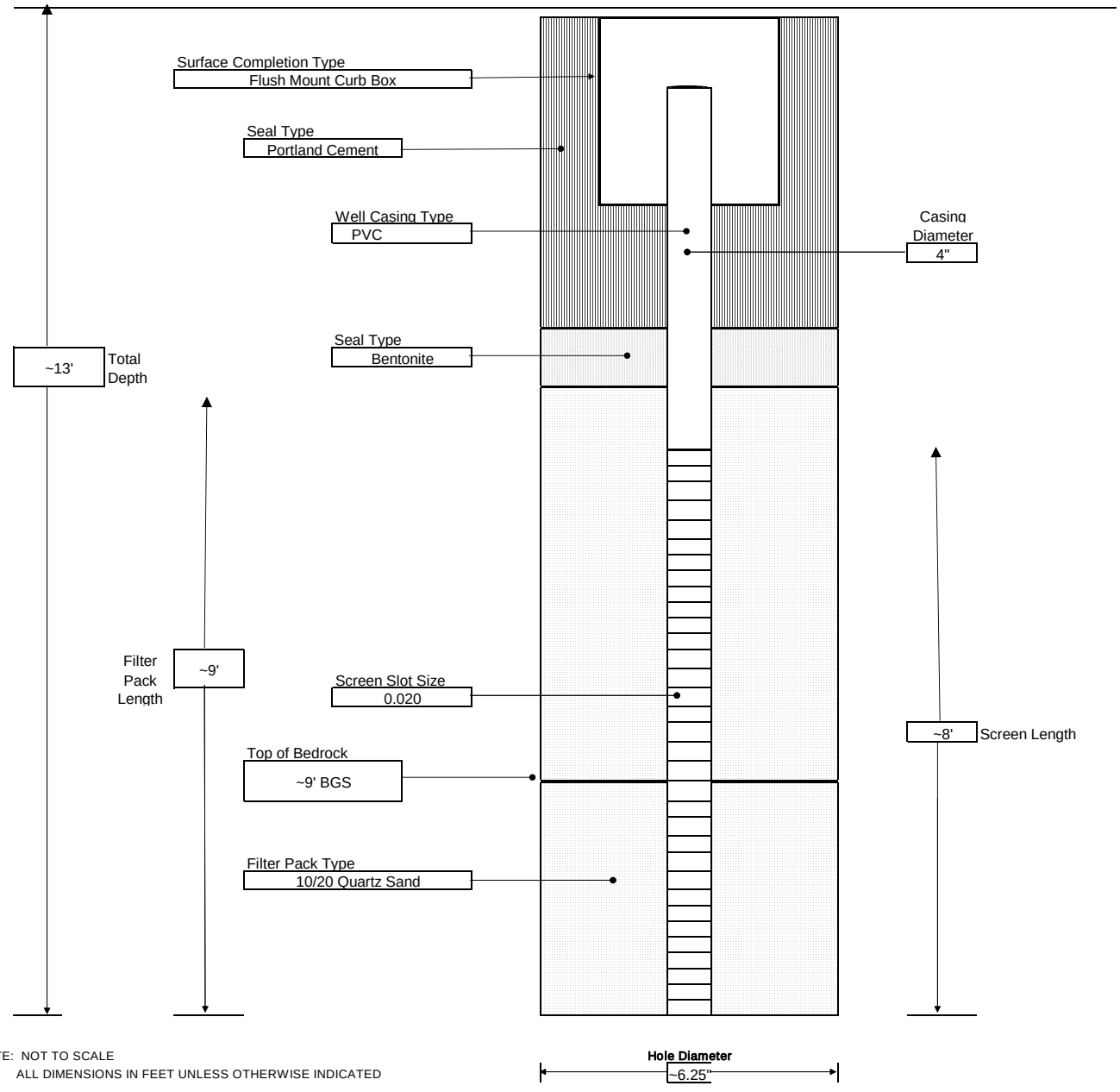

NOTE: NOT TO SCALE
ALL DIMENSIONS IN FEET UNLESS OTHERWISE INDICATED

GENERAL NOTES:
1) STRATIFICATION LINES REPRESENT APPROXIMATE BOUNDARY BETWEEN SOIL TYPES, TRANSITIONS MAY BE GRADUAL
2) THE ABOVE IS THE PROPOSED DESIGN FOR THREE WELLS IN AOC #6C; DEPTHS MAY VARY SLIGHTLY BASED ON FIELD CONDITIONS.

LABELLA Associates, P.C. 300 STATE STREET, ROCHESTER, NEW YORK ENVIRONMENTAL ENGINEERING CONSULTANTS	PROJECT 690 Saint Paul Street Rochester, New York BCP Site #C828159 IRM - AOC #1: Former Oil House Area	BORING: BW-09 SHEET 1 OF 1 JOB # CHKD. BY:

CONTRACTOR: Nothnagle
DRILLER: Steve Laurenty
LABELLA REPRESENTATIVE: J. Gillen
BORING LOCATION:
GROUND SURFACE ELEVATION: N/A DATUM: N/A
START DATE: 1/17/2012 END DATE: 1/17/2012

TYPE OF DRILL RIG:
AUGER SIZE AND TYPE: N/A
OVERBURDEN SAMPLING METHOD:
ROCK DRILLING METHOD: N/A

WATER LEVEL DATA				
DATE	TIME	WATER	CASING	REMARKS

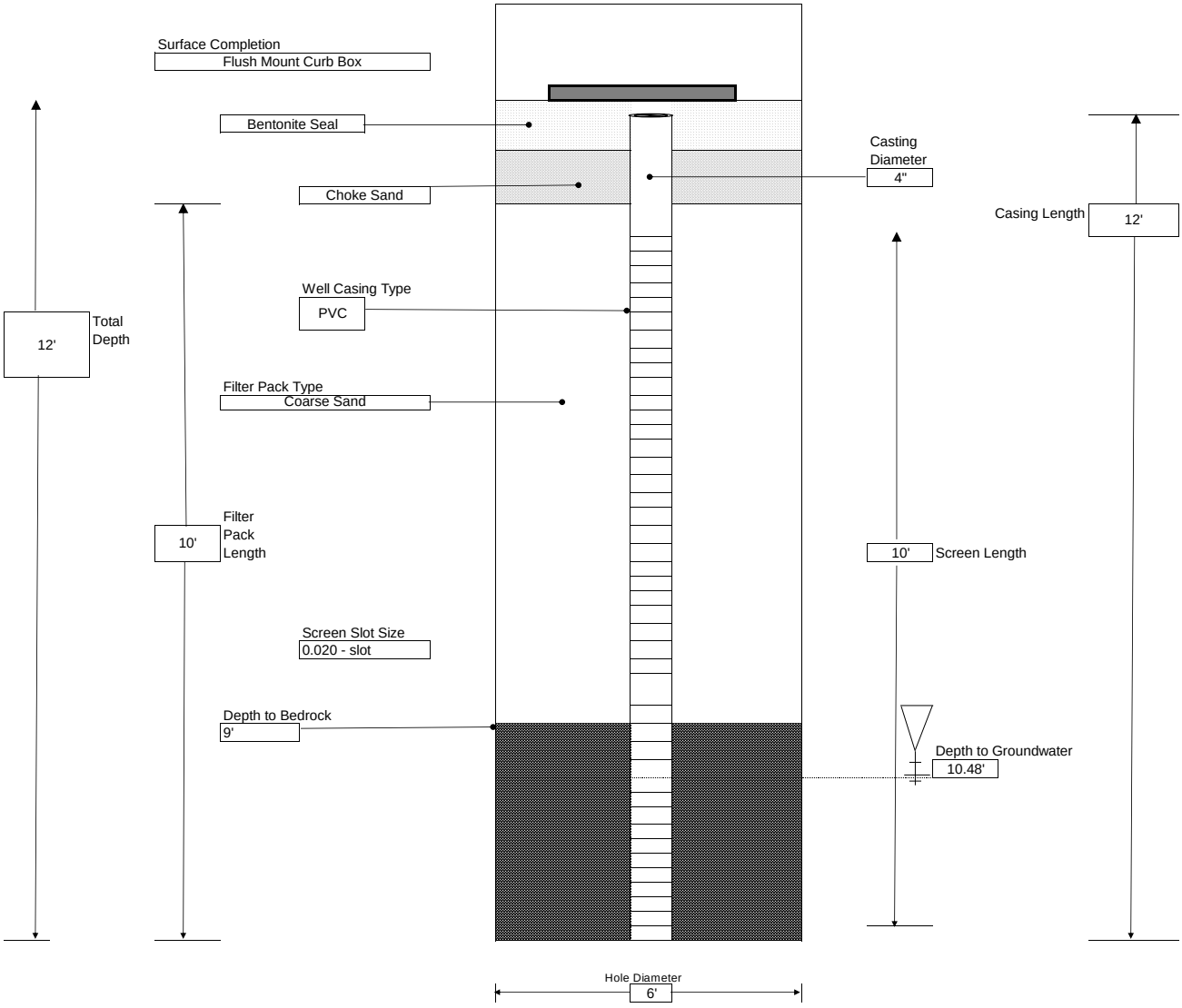

LABELLA Associates, P.C. 300 STATE STREET, ROCHESTER, NEW YORK ENVIRONMENTAL ENGINEERING CONSULTANTS	PROJECT 690 Saint Paul Street Rochester, New York BCP Site #C828159 IRM - AOC #1: Former Oil House Area	BORING: BW-10 SHEET 1 OF 1 JOB # CHKD. BY:

CONTRACTOR: Nothnagle
DRILLER: Steve Laurenty
LABELLA REPRESENTATIVE: J. Gillen
BORING LOCATION:
GROUND SURFACE ELEVATION: N/A DATUM: N/A
START DATE: 1/17/2012 END DATE: 1/17/2012

TYPE OF DRILL RIG:
AUGER SIZE AND TYPE: N/A
OVERBURDEN SAMPLING METHOD:
ROCK DRILLING METHOD: N/A

WATER LEVEL DATA				
DATE	TIME	WATER	CASING	REMARKS

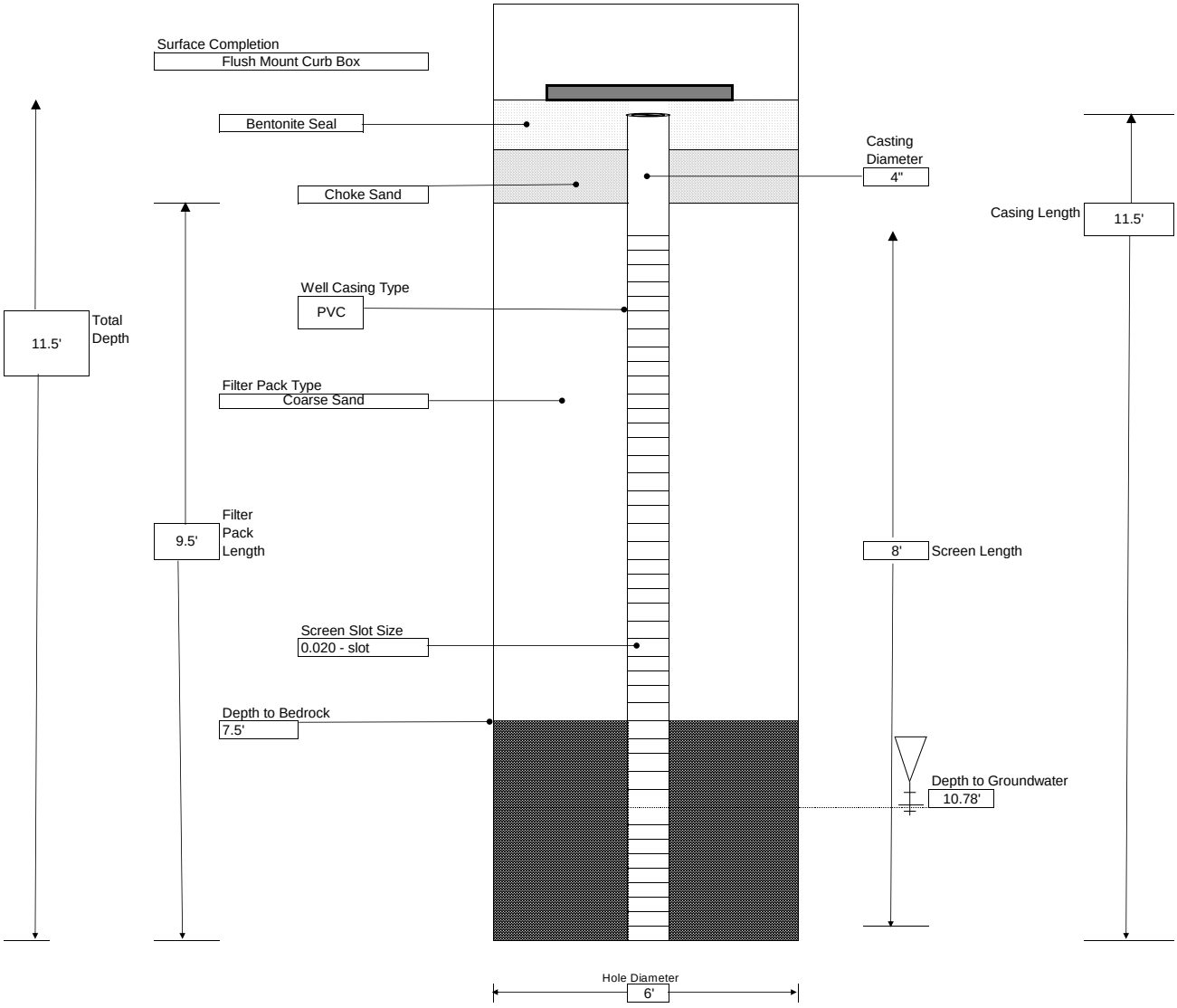

LABELLA Associates, P.C. 300 STATE STREET, ROCHESTER, NEW YORK ENVIRONMENTAL ENGINEERING CONSULTANTS	PROJECT 690 Saint Paul Street Rochester, New York BCP Site #C828159 IRM - AOC #1: Former Oil House Area	BORING: BW-11 SHEET 1 OF 1 JOB # CHKD. BY:

CONTRACTOR: Nothnagle
DRILLER: Steve Laurenty
LABELLA REPRESENTATIVE: J. Gillen
BORING LOCATION:
GROUND SURFACE ELEVATION: N/A DATUM: N/A
START DATE: 1/18/2012 END DATE: 1/18/2012

TYPE OF DRILL RIG:
AUGER SIZE AND TYPE: N/A
OVERBURDEN SAMPLING METHOD:
ROCK DRILLING METHOD: N/A

WATER LEVEL DATA				
DATE	TIME	WATER	CASING	REMARKS

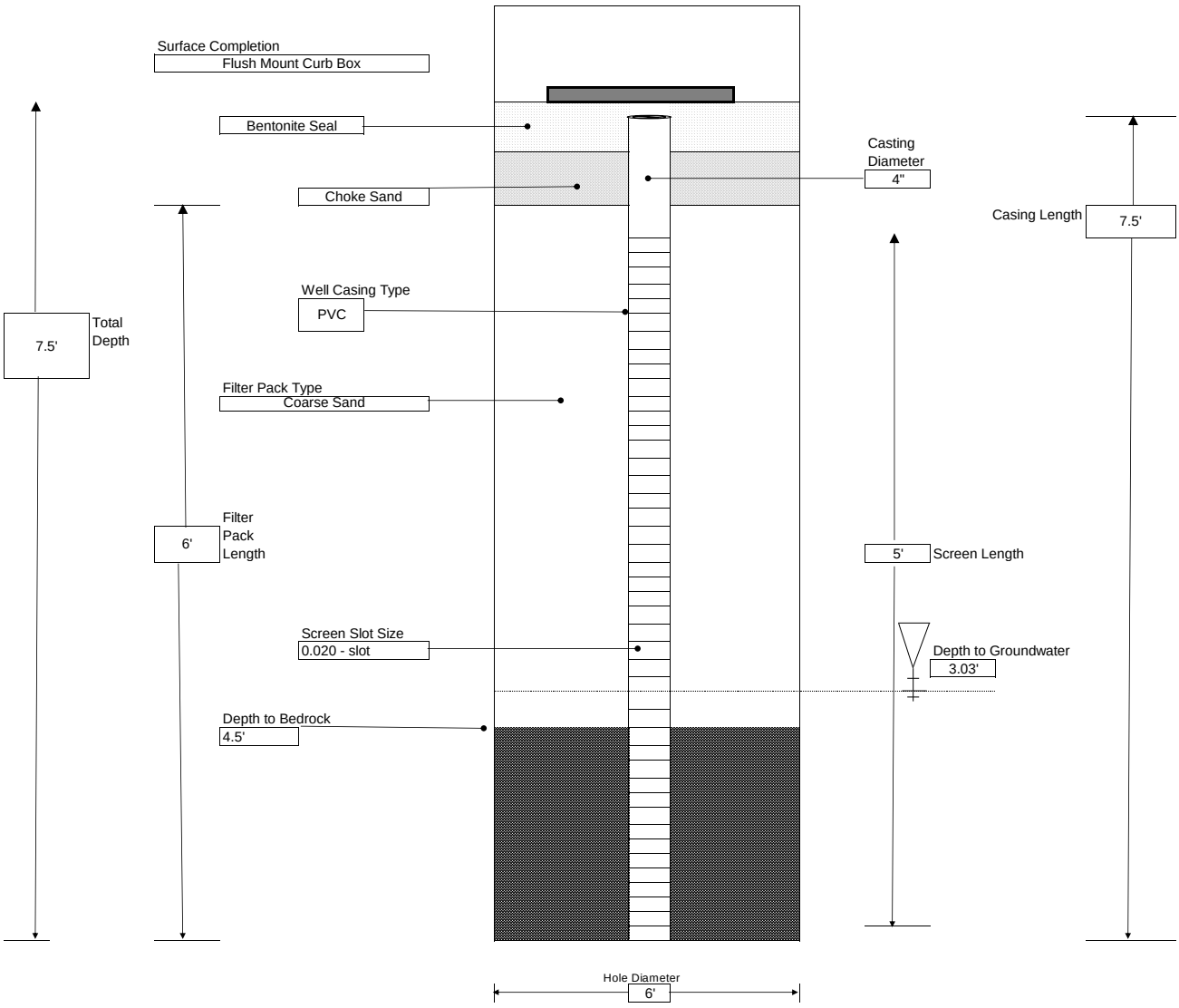

LABELLA Associates, P.C. 300 STATE STREET, ROCHESTER, NEW YORK ENVIRONMENTAL ENGINEERING CONSULTANTS	PROJECT 690 Saint Paul Street Rochester, New York BCP Site #C828159 IRM - AOC #1: Former Oil House Area	BORING: BW-12 SHEET 1 OF 1 JOB # CHKD. BY:

CONTRACTOR: Nothnagle
DRILLER: Steve Laurenty
LABELLA REPRESENTATIVE: J. Gillen
BORING LOCATION:
GROUND SURFACE ELEVATION: N/A DATUM: N/A
START DATE: 1/19/2012 END DATE: 1/19/2012

TYPE OF DRILL RIG:
AUGER SIZE AND TYPE: N/A
OVERBURDEN SAMPLING METHOD:
ROCK DRILLING METHOD: N/A

WATER LEVEL DATA

DATE	TIME	WATER	CASING	REMARKS

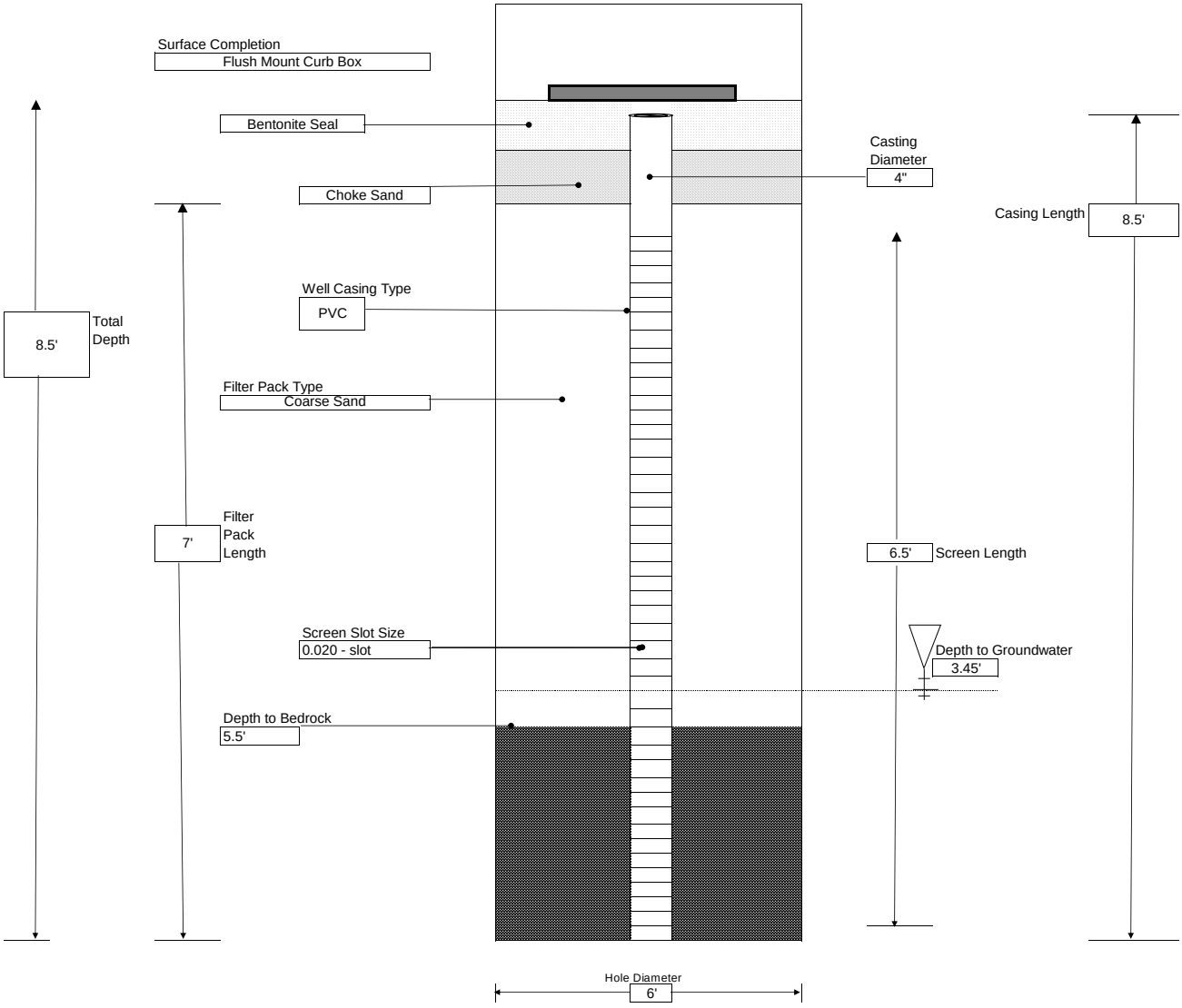

LABELLA Associates, P.C. 300 STATE STREET, ROCHESTER, NEW YORK ENVIRONMENTAL ENGINEERING CONSULTANTS	PROJECT 690 Saint Paul Street Rochester, New York BCP Site #C828159 IRM - AOC #1: Former Oil House Area	BORING: REC-B-East SHEET 1 OF 1 JOB # CHKD. BY:

CONTRACTOR: Nothnagle
DRILLER: Steve Laurenty
LABELLA REPRESENTATIVE: J. Gillen
BORING LOCATION:
GROUND SURFACE ELEVATION: N/A DATUM: N/A
START DATE: 1/19/2012 END DATE: 1/19/2012

TYPE OF DRILL RIG:
AUGER SIZE AND TYPE: N/A
OVERBURDEN SAMPLING METHOD:
ROCK DRILLING METHOD: N/A

WATER LEVEL DATA

DATE	TIME	WATER	CASING	REMARKS
1/20/2012	1415	4.00'		

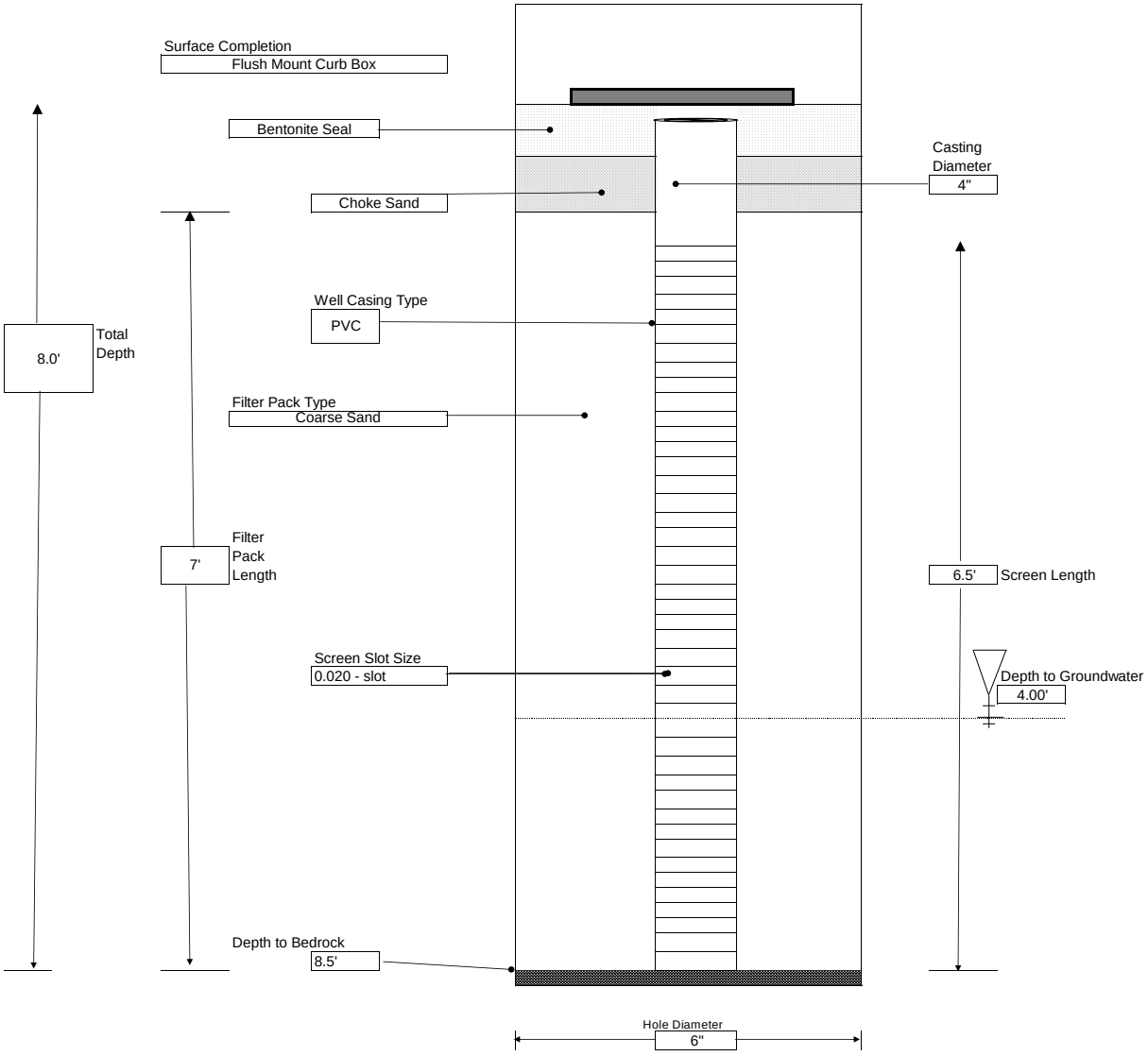

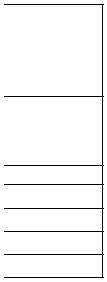

LABELLA Associates, P.C. 300 STATE STREET, ROCHESTER, NEW YORK ENVIRONMENTAL ENGINEERING CONSULTANTS	PROJECT 690 Saint Paul Street Rochester, New York BCP Site #C828159 IRM - AOC #1: Former Oil House Area	BORING: REC-B-West SHEET 1 OF 1 JOB # CHKD. BY:

CONTRACTOR: Nothnagle
DRILLER: Steve Laurenty
LABELLA REPRESENTATIVE: J. Gillen
BORING LOCATION:
GROUND SURFACE ELEVATION: N/A DATUM: N/A
START DATE: 1/19/2012 END DATE: 1/19/2012

TYPE OF DRILL RIG:
AUGER SIZE AND TYPE: N/A
OVERBURDEN SAMPLING METHOD:
ROCK DRILLING METHOD: N/A

WATER LEVEL DATA

DATE	TIME	WATER	CASING	REMARKS
1/20/2012	1245	4.33'		

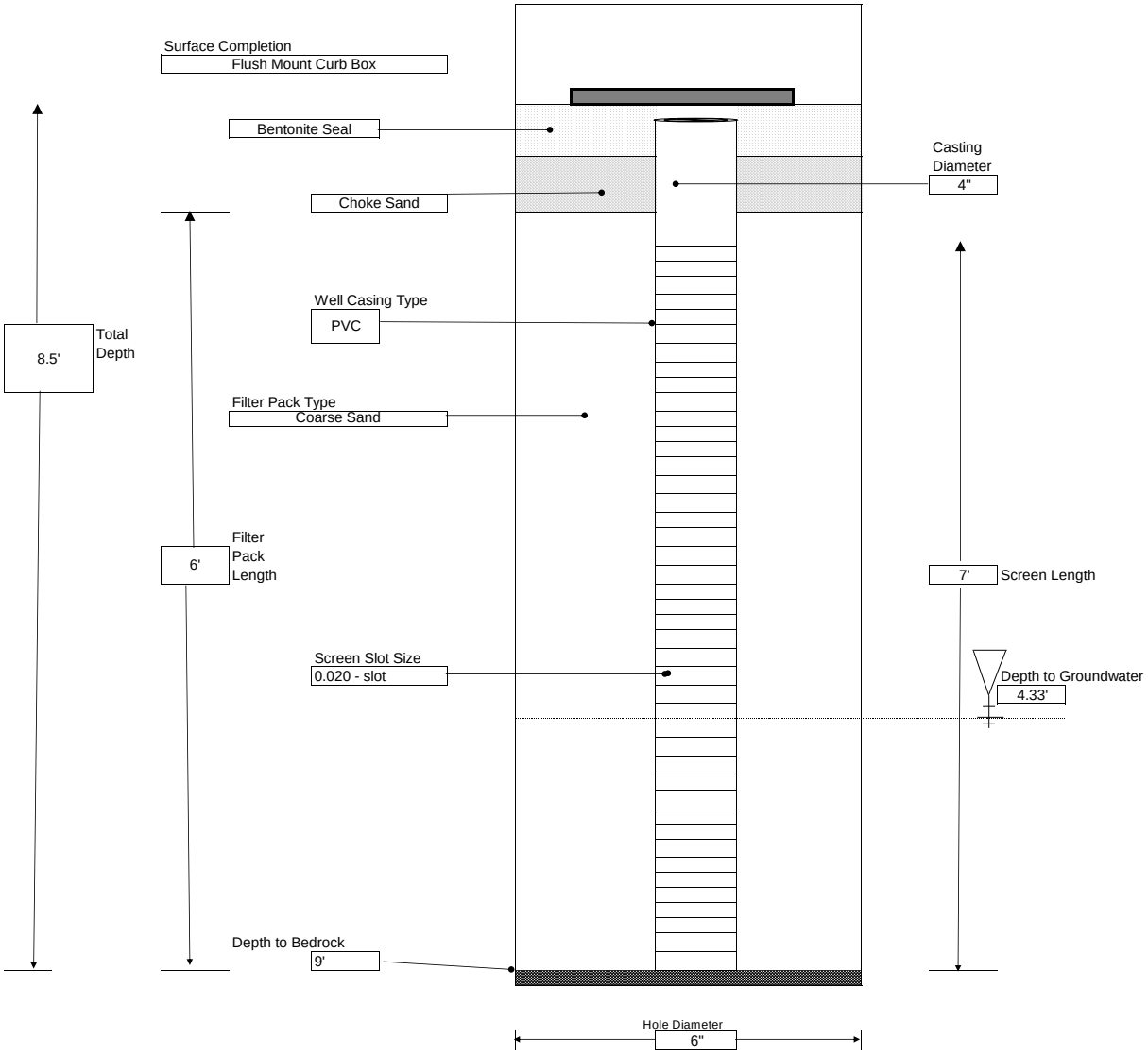

LABELLA Associates, P.C. 300 STATE STREET, ROCHESTER, NEW YORK ENVIRONMENTAL ENGINEERING CONSULTANTS	**PROJECT** **Phase II Environmental Site Assessment** **690 St. Paul Street** **Rochester, New York**	WELL ID **BW-1** SHEET 1 OF 1 JOB # 208492 CHKD. BY:

CONTRACTOR: Nothnagle Drilling Co.		BORING LOCATION	
DRILLER Steve Gelser		GROUND SURFACE ELEVATION	DATUM
LABELLA REPRESENTATIVE: C. A. Stiles		START DATE 18-Aug-08	END DATE 20-Aug-08

	WATER LEVEL DATA			
TYPE OF DRILL RIG: CME Model 75 Truck-mount Rotary Drill Rig	DATE	TIME	WATER	REMARKS
AUGER SIZE AND TYPE 6.25" ID Hollow Stem Augers				
OVERBURDEN SAMPLING METHOD No Soil Sampling Conducted				
ROCK DRILLING METHOD HX (3.875" ID) Water rotary Core Barrel				

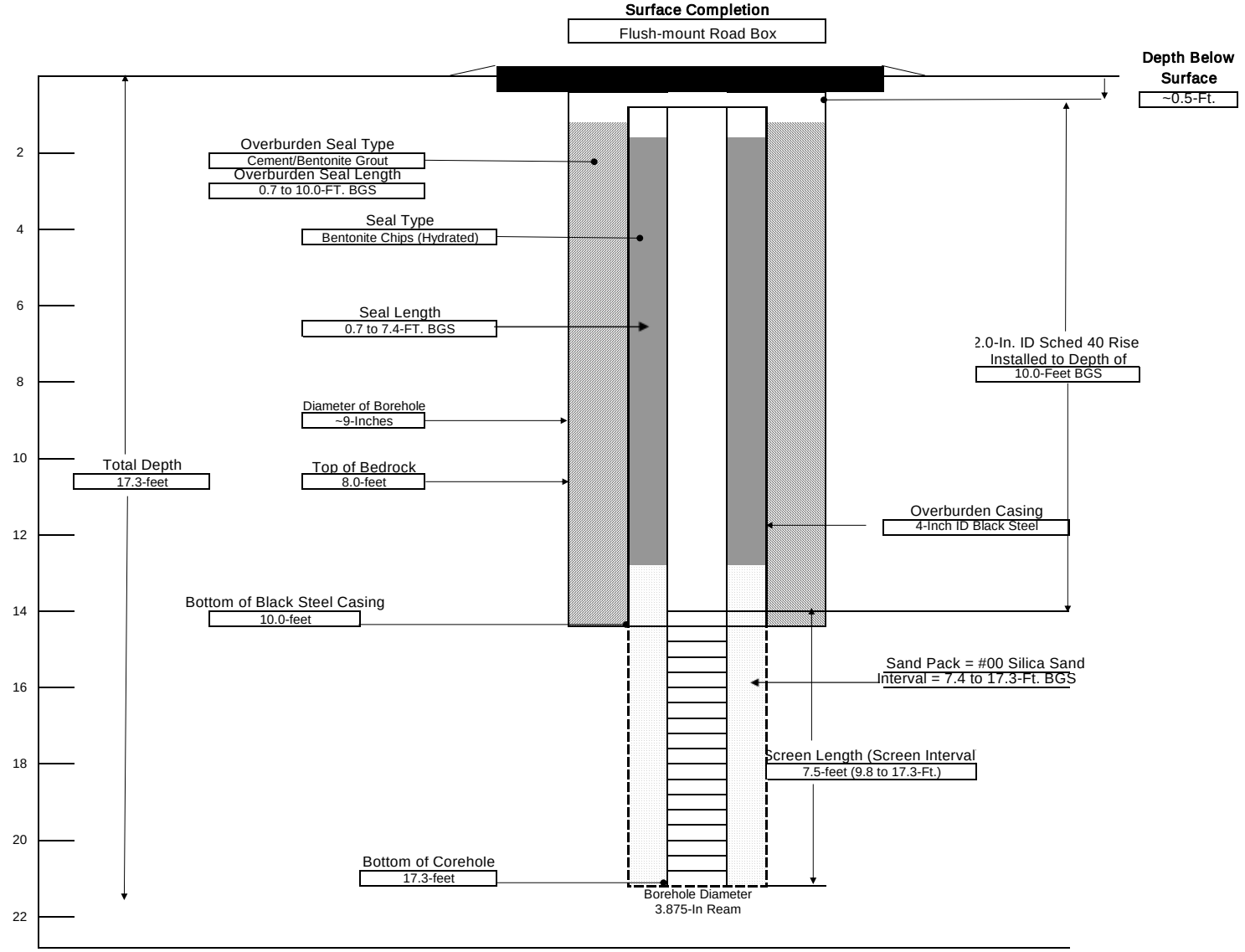

NOTE ALL DIMENSIONS IN FEET UNLESS OTHERWISE INDICATED

GENERAL NOTES:

1) STRATIFICATION LINES REPRESENT APPROXIMATE BOUNDARY BETWEEN SOIL TYPES, TRANSITIONS MAY BE GRADUAL
2) WATER LEVEL READINGS HAVE BEEN MADE AT TIMES AND UNDER CONDITIONS STATED, FLUCTUATIONS OF GROUNDWATER MAY OCCUR DUE TO OTHER FACTORS THAN THOSE PRESENT AT THE TIME MEASUREMENTS WERE MADE.

LABELLA Associates, P.C.
300 STATE STREET, ROCHESTER, NEW YORK
ENVIRONMENTAL ENGINEERING CONSULTANTS

PROJECT
Phase II Environmental Site Assessment
690 St. Paul Street
Rochester, New York

WELL ID **BW-2**
SHEET 1 OF 1
JOB # 208492
CHKD. BY:

CONTRACTOR: Nothnagle Drilling Co.
DRILLER Steve Gelser
LABELLA REPRESENTATIVE: C. A. Stiles

BORING LOCATION
GROUND SURFACE ELEVATION DATUM
START DATE 18-Aug-08 END DATE 19-Aug-08

TYPE OF DRILL RIG: CME Model 75 Truck-mount Rotary Drill Rig
AUGER SIZE AND TYPE 6.25" ID Hollow Stem Augers
OVERBURDEN SAMPLING METHOD No Soil Sampling Conducted
ROCK DRILLING METHOD HX (3.875" ID) Water rotary Core Barrel

WATER LEVEL DATA			
DATE	TIME	WATER	REMARKS

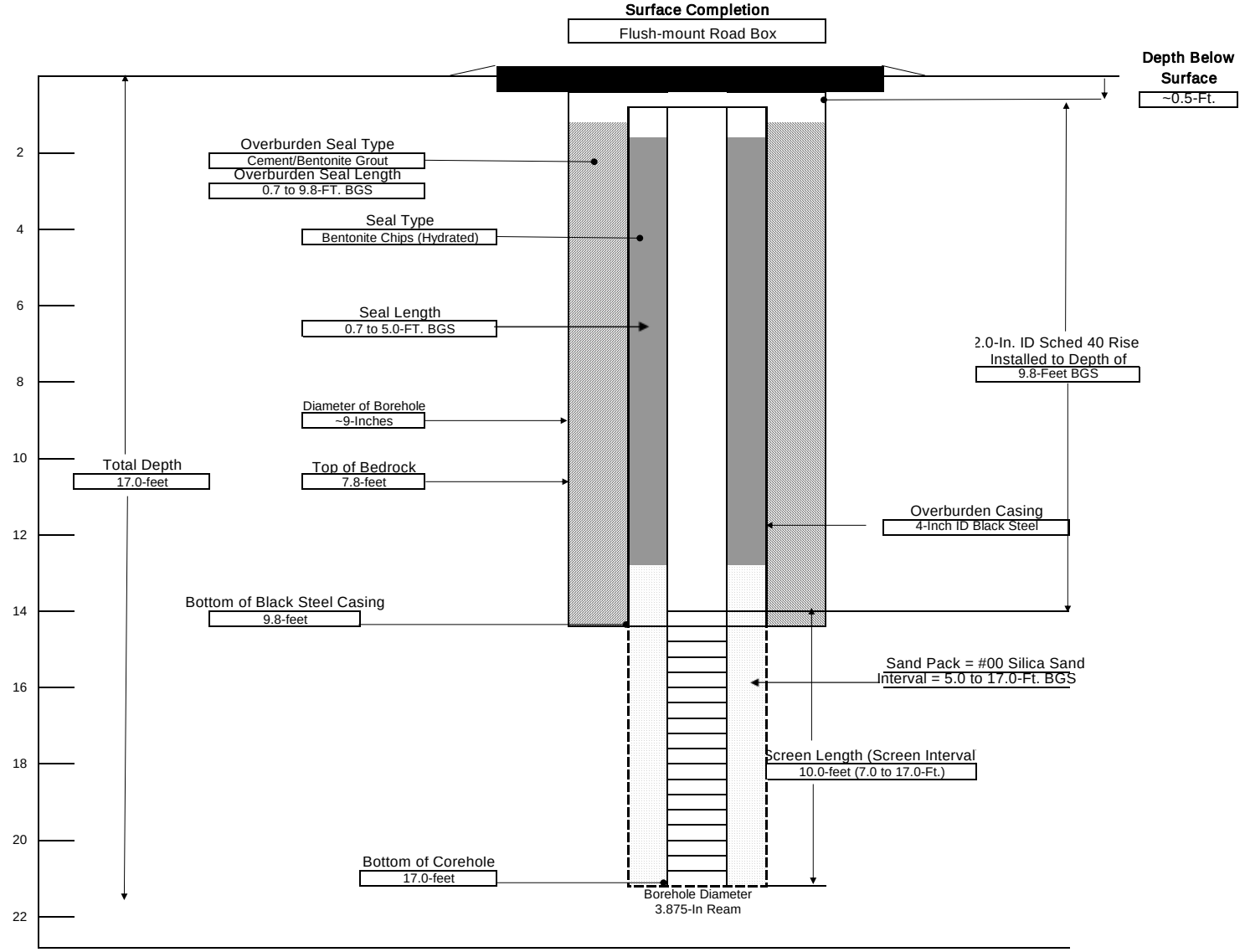

NOTE ALL DIMENSIONS IN FEET UNLESS OTHERWISE INDICATED

GENERAL NOTES:
1) STRATIFICATION LINES REPRESENT APPROXIMATE BOUNDARY BETWEEN SOIL TYPES, TRANSITIONS MAY BE GRADUAL
2) WATER LEVEL READINGS HAVE BEEN MADE AT TIMES AND UNDER CONDITIONS STATED, FLUCTUATIONS OF GROUNDWATER MAY OCCUR DUE TO OTHER FACTORS THAN THOSE PRESENT AT THE TIME MEASUREMENTS WERE MADE.

LABELLA Associates, P.C. 300 STATE STREET, ROCHESTER, NEW YORK ENVIRONMENTAL ENGINEERING CONSULTANTS	**PROJECT** **Phase II Environmental Site Assessment** **690 St. Paul Street** **Rochester, New York**	WELL ID **BW-3** SHEET 1 OF 1 JOB # 208492 CHKD. BY:

CONTRACTOR: Nothnagle Drilling Co.		BORING LOCATION	
DRILLER Steve Gelser		GROUND SURFACE ELEVATION	DATUM
LABELLA REPRESENTATIVE: C. A. Stiles		START DATE 18-Aug-08	END DATE 19-Aug-08

	WATER LEVEL DATA			
TYPE OF DRILL RIG: CME Model 75 Truck-mount Rotary Drill Rig	DATE	TIME	WATER	REMARKS
AUGER SIZE AND TYPE 6.25" ID Hollow Stem Augers				
OVERBURDEN SAMPLING METHOD No Soil Sampling Conducted				
ROCK DRILLING METHOD HX (3.875" ID) Water rotary Core Barrel				

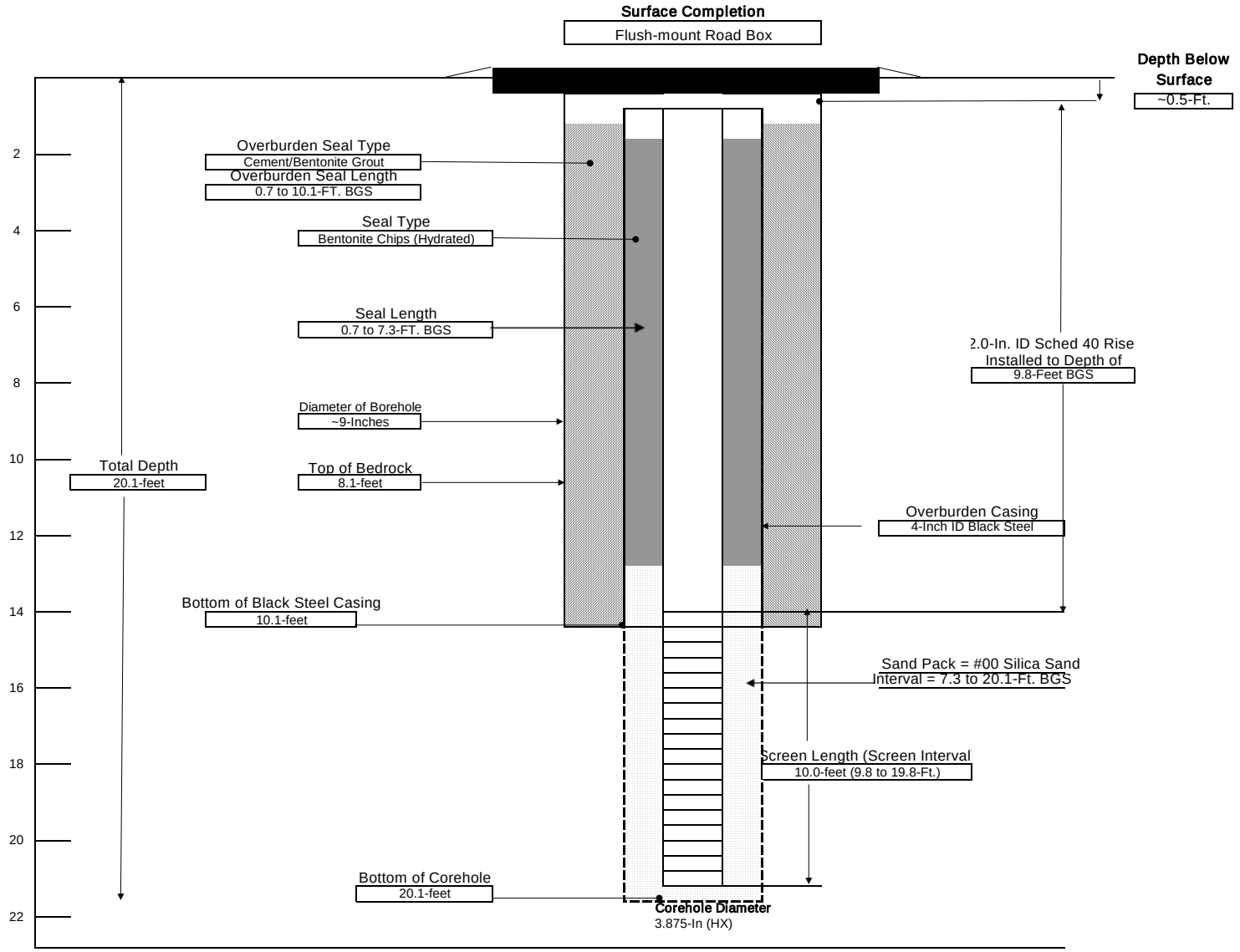

NOTE ALL DIMENSIONS IN FEET UNLESS OTHERWISE INDICATED

GENERAL NOTES:

1) STRATIFICATION LINES REPRESENT APPROXIMATE BOUNDARY BETWEEN SOIL TYPES, TRANSITIONS MAY BE GRADUAL
2) WATER LEVEL READINGS HAVE BEEN MADE AT TIMES AND UNDER CONDITIONS STATED, FLUCTUATIONS OF GROUNDWATER MAY OCCUR DUE TO OTHER FACTORS THAN THOSE PRESENT AT THE TIME MEASUREMENTS WERE MADE.

LABELLA Associates, P.C. 300 STATE STREET, ROCHESTER, NEW YORK ENVIRONMENTAL ENGINEERING CONSULTANTS	**PROJECT** **Phase II Environmental Site Assessment** **690 St. Paul Street** **Rochester, New York**	WELL ID **BW-4** SHEET 1 OF 1 JOB # 208492 CHKD. BY:

CONTRACTOR: Nothnagle Drilling Co.		BORING LOCATION	
DRILLER Steve Gelser		GROUND SURFACE ELEVATION	DATUM
LABELLA REPRESENTATIVE: C. A. Stiles		START DATE 18-Aug-08	END DATE 20-Aug-08
TYPE OF DRILL RIG: CME Model 75 Truck-mount Rotary Drill Rig		WATER LEVEL DATA	
AUGER SIZE AND TYPE 6.25" ID Hollow Stem Augers		DATE / TIME / WATER / REMARKS	
OVERBURDEN SAMPLING METHOD No Soil Sampling Conducted			
ROCK DRILLING METHOD HX (3.875" ID) Water rotary Core Barrel			

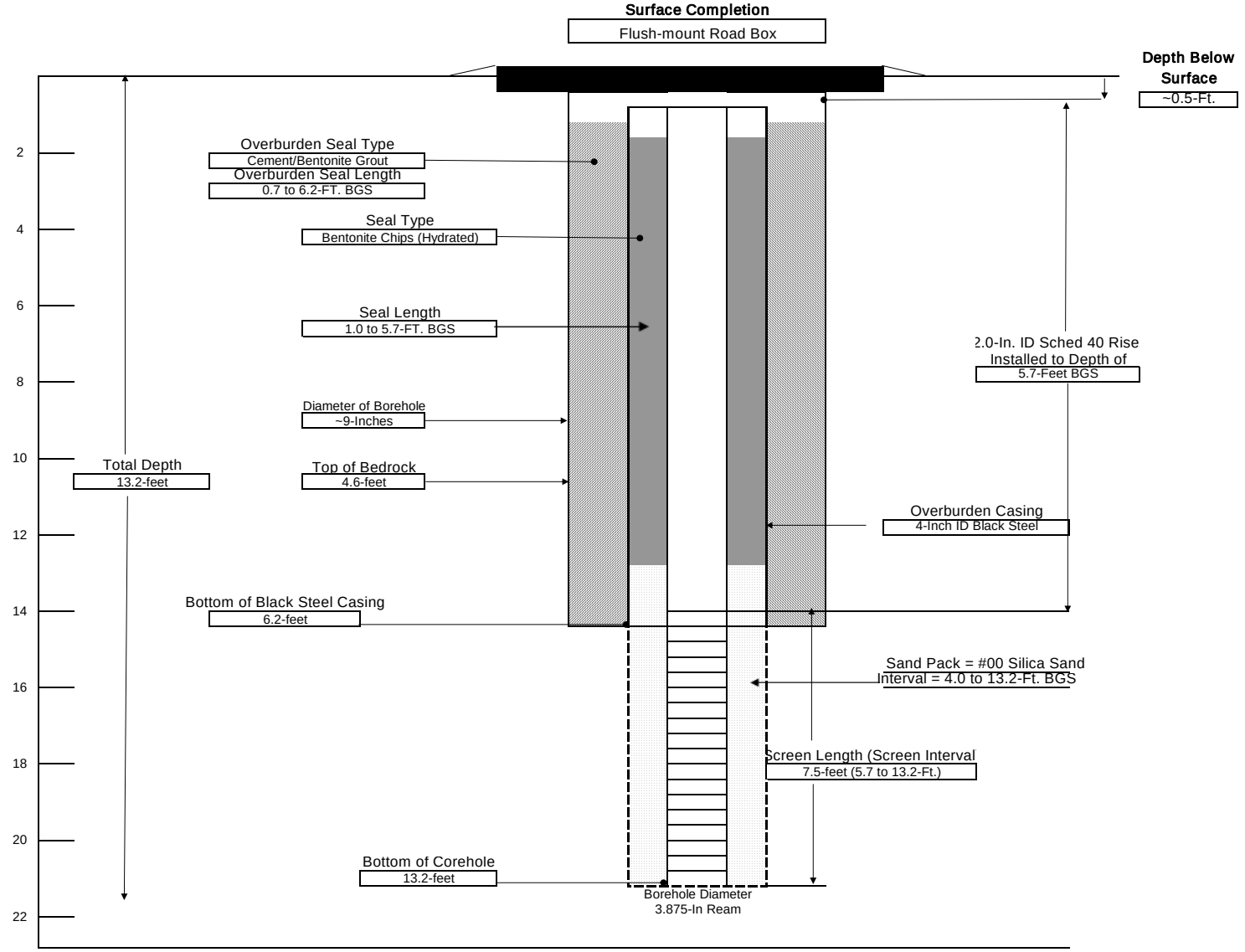

NOTE ALL DIMENSIONS IN FEET UNLESS OTHERWISE INDICATED

GENERAL NOTES:

1) STRATIFICATION LINES REPRESENT APPROXIMATE BOUNDARY BETWEEN SOIL TYPES, TRANSITIONS MAY BE GRADUAL
2) WATER LEVEL READINGS HAVE BEEN MADE AT TIMES AND UNDER CONDITIONS STATED, FLUCTUATIONS OF GROUNDWATER MAY OCCUR DUE TO OTHER FACTORS THAN THOSE PRESENT AT THE TIME MEASUREMENTS WERE MADE.

LABELLA Associates, P.C. 300 STATE STREET, ROCHESTER, NEW YORK ENVIRONMENTAL ENGINEERING CONSULTANTS	**PROJECT** **BCP Site #C828159** **690 St. Paul Street** **Rochester, New York**	WELL ID **BW-5** SHEET 1 OF 1 JOB # 209280 CHKD. BY: ED

CONTRACTOR: Nothnagle Drilling Co. | BORING LOCATION
DRILLER Kevin Bush | GROUND SURFACE ELEVATION | DATUM
LABELLA REPRESENTATIVE: E. Dumrese | START DATE 20-Oct-10 | END DATE 21-Oct-10

TYPE OF DRILL RIG: CME Model 75 Truck-mount Rotary Drill Rig
AUGER SIZE AND TYPE 6.25" ID Hollow Stem Augers
OVERBURDEN SAMPLING METHOD Split Spoon
ROCK DRILLING METHOD HX (3.875" ID) Triple Water rotary Core Barrel

WATER LEVEL DATA

DATE	TIME	WATER	REMARKS
10/22/10	800	8.28-Ft.	

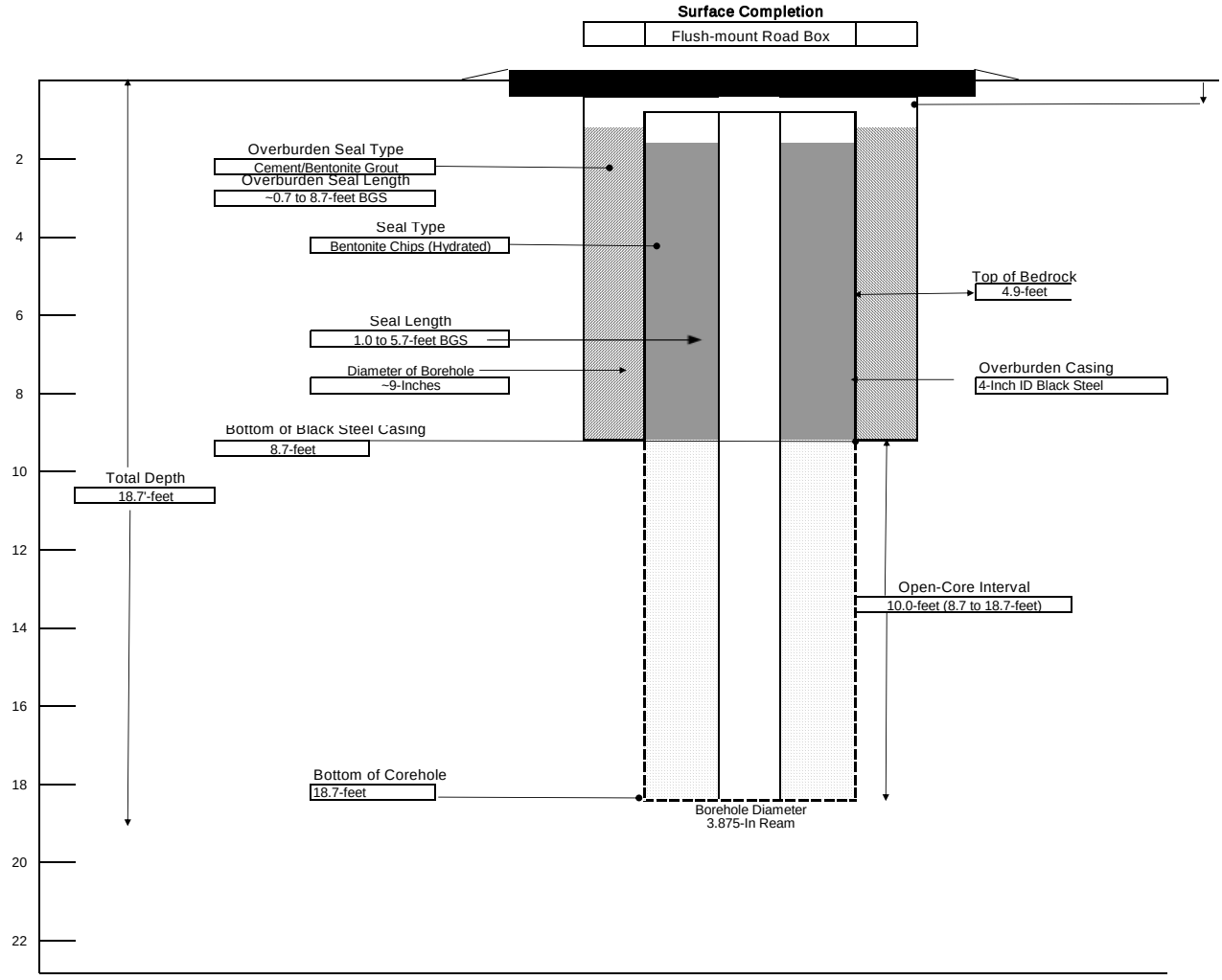

NOTE ALL DIMENSIONS IN FEET UNLESS OTHERWISE INDICATED

GENERAL NOTES:

1) STRATIFICATION LINES REPRESENT APPROXIMATE BOUNDARY BETWEEN SOIL TYPES, TRANSITIONS MAY BE GRADUAL
2) WATER LEVEL READINGS HAVE BEEN MADE AT TIMES AND UNDER CONDITIONS STATED, FLUCTUATIONS OF GROUNDWATER MAY OCCUR DUE TO OTHER FACTORS THAN THOSE PRESENT AT THE TIME MEASUREMENTS WERE MADE.



Depth Below Surface
~0.5-Ft.



LABELLA Associates, P.C.
300 STATE STREET, ROCHESTER, NEW YORK
ENVIRONMENTAL ENGINEERING CONSULTANTS

PROJECT
BCP Site #C828159
690 St. Paul Street
Rochester, New York

WELL ID **BW-6**
SHEET 1 OF 1
JOB # 209280
CHKD. BY: ED

CONTRACTOR Nothnagle Drilling Co.
DRILLER Kevin Bush
LABELLA REPRESENTATIVE: E. Dumrese

BORING LOCATION
GROUND SURFACE ELEVATION DATUM
START DATE 21-Oct-10 END DATE 22-Oct-10

TYPE OF DRILL RIG: CME Model 75 Truck-mount Rotary Drill Rig
AUGER SIZE AND TYPE 6.25" ID Hollow Stem Augers
OVERBURDEN SAMPLING METHOD Split Spoon
ROCK DRILLING METHOD HX (3.875" ID) Triple Water rotary Core Barrel

WATER LEVEL DATA			
DATE	TIME	WATER	REMARKS

Surface Completion
Flush-mount Road Box

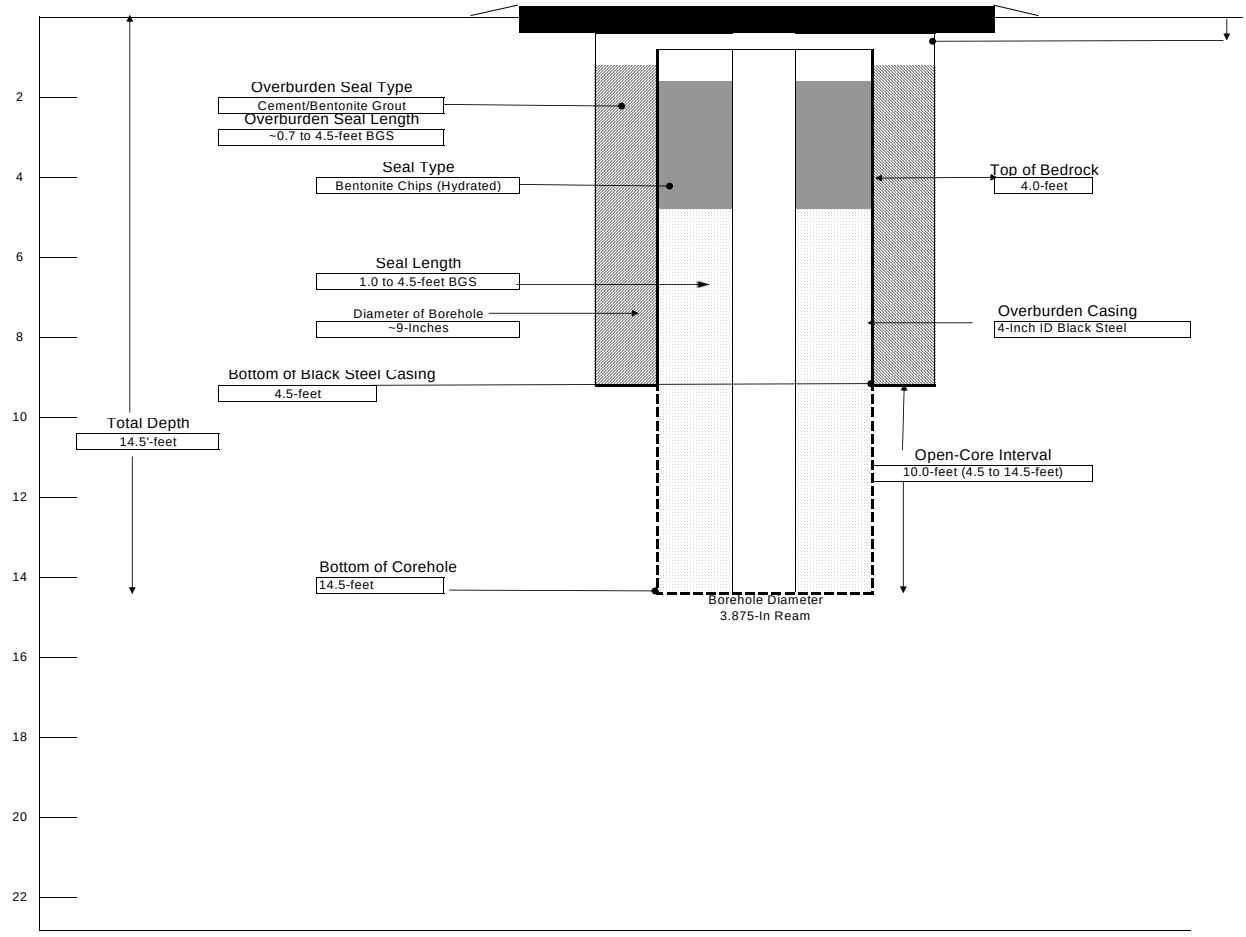

NOTE ALL DIMENSIONS IN FEET UNLESS OTHERWISE INDICATED

GENERAL NOTES:
1) STRATIFICATION LINES REPRESENT APPROXIMATE BOUNDARY BETWEEN SOIL TYPES, TRANSITIONS MAY BE GRADUAL
2) WATER LEVEL READINGS HAVE BEEN MADE AT TIMES AND UNDER CONDITIONS STATED, FLUCTUATIONS OF GROUNDWATER MAY OCCUR DUE TO OTHER FACTORS THAN THOSE PRESENT AT THE TIME MEASUREMENTS WERE MADE.

Depth Below Surface
~0.5-Ft.



LABELLA Associates, PC. 300 STATE STREET, ROCHESTER, NEW YORK ENVIRONMENTAL ENGINEERING CONSULTANTS	**PROJECT** **BCP Site #C828159** **690 St. Paul Street** **Rochester, New York**	WELL ID **BW-7** SHEET 1 OF 1 JOB # 209280 CHKD. BY: ED

CONTRACTOR Nothnagle Drilling Co.		BORING LOCATION	
DRILLER Kevin Bush		GROUND SURFACE ELEVATION	DATUM
LABELLA REPRESENTATIVE: E. Dumrese		START DATE 21-Oct-10	END DATE 22-Oct-10
TYPE OF DRILL RIG: CME Model 75 Truck-mount Rotary Drill Rig		WATER LEVEL DATA	
AUGER SIZE AND TYPE 6.25" ID Hollow Stem Augers		DATE / TIME / WATER / REMARKS	
OVERBURDEN SAMPLING METHOD Split Spoon			
ROCK DRILLING METHOD HX (3.875" ID) Triple Water rotary Core Barrel			

Surface Completion

Flush-mount Road Box

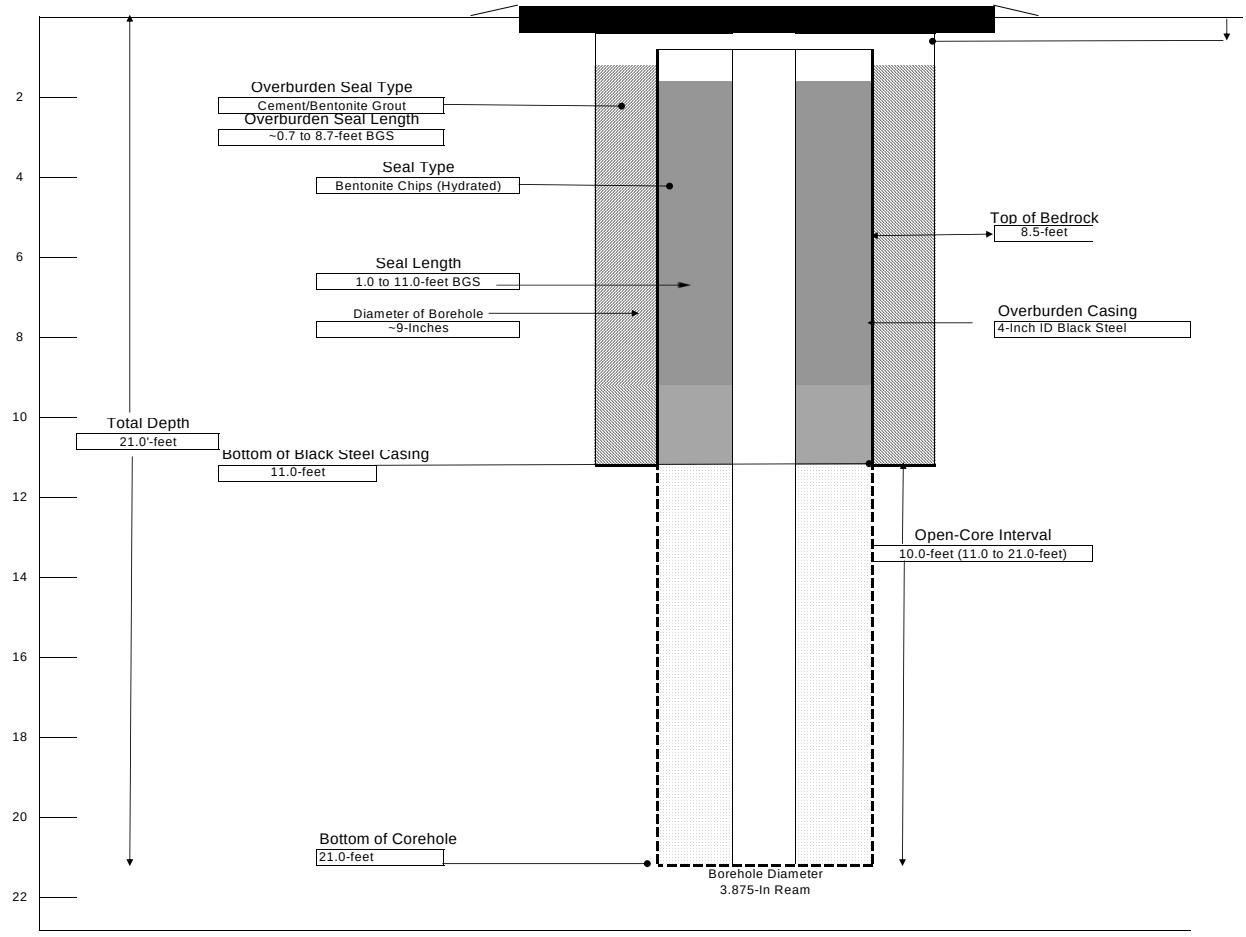

NOTE ALL DIMENSIONS IN FEET UNLESS OTHERWISE INDICATED

GENERAL NOTES:

1) STRATIFICATION LINES REPRESENT APPROXIMATE BOUNDARY BETWEEN SOIL TYPES, TRANSITIONS MAY BE GRADUAL
2) WATER LEVEL READINGS HAVE BEEN MADE AT TIMES AND UNDER CONDITIONS STATED, FLUCTUATIONS OF GROUNDWATER MAY OCCUR DUE TO OTHER FACTORS THAN THOSE PRESENT AT THE TIME MEASUREMENTS WERE MADE.

Depth Below Surface
~0.5-Ft.



LABELLA Associates, P.C. 300 STATE STREET, ROCHESTER, NEW YORK ENVIRONMENTAL ENGINEERING CONSULTANTS	**PROJECT** **BCP Site #C828159** **690 St. Paul Street** **Rochester, New York**	WELL ID **BW-8** SHEET 1 OF 1 JOB # 209280 CHKD. BY: ED

CONTRACTOR Nothnagle Drilling Co.		BORING LOCATION	
DRILLER Kevin Bush		GROUND SURFACE ELEVATION	DATUM
LABELLA REPRESENTATIVE: E. Dumrese		START DATE 19-Oct-20	END DATE 20-Oct-10
TYPE OF DRILL RIG: CME Model 75 Truck-mount Rotary Drill Rig		WATER LEVEL DATA	
AUGER SIZE AND TYPE 6.25" ID Hollow Stem Augers		DATE / TIME / WATER / REMARKS	
OVERBURDEN SAMPLING METHOD Split Spoon			
ROCK DRILLING METHOD HX (3.875" ID) Triple Water rotary Core Barrel			

Surface Completion

Flush-mount Road Box

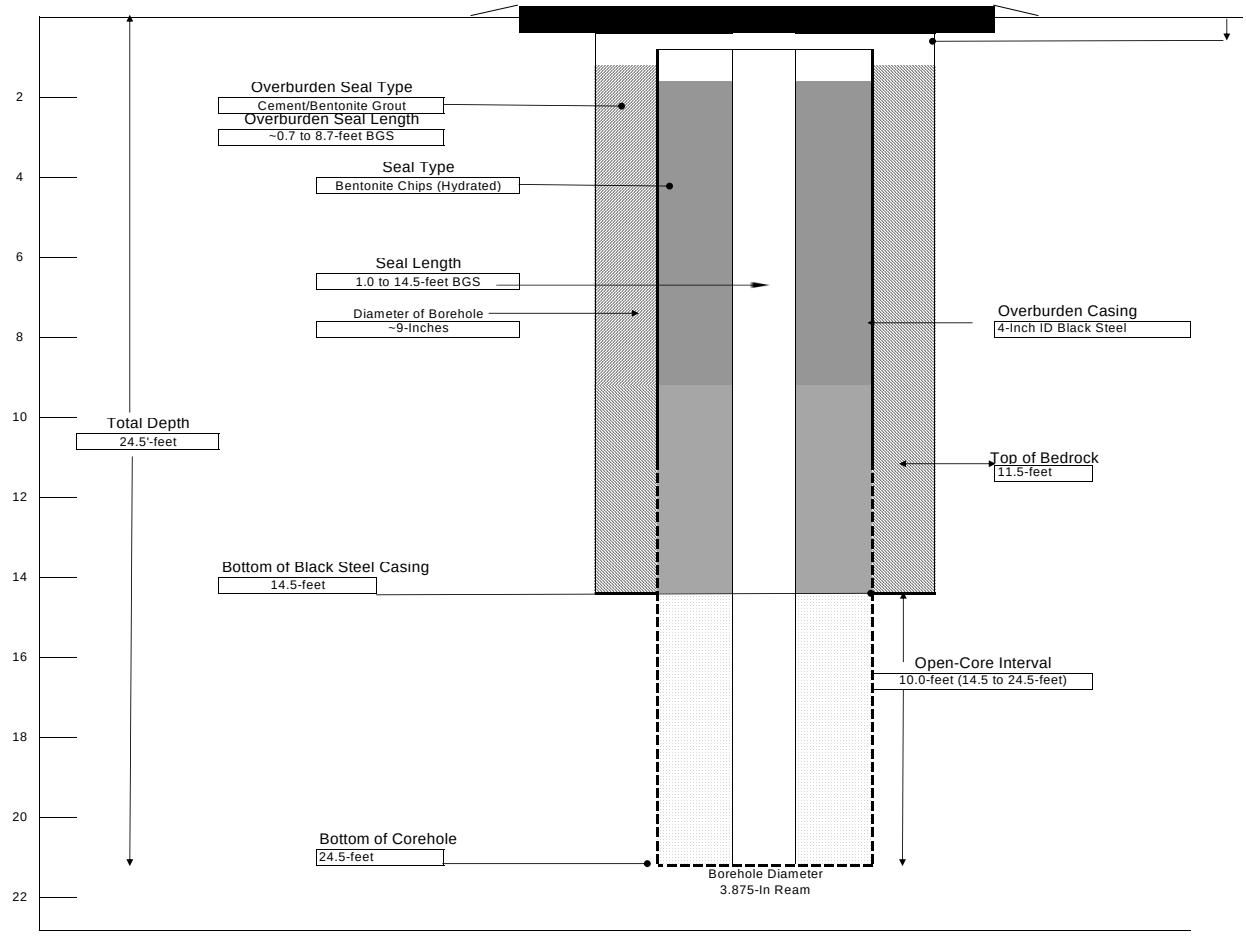

NOTE ALL DIMENSIONS IN FEET UNLESS OTHERWISE INDICATED

GENERAL NOTES:

1) STRATIFICATION LINES REPRESENT APPROXIMATE BOUNDARY BETWEEN SOIL TYPES, TRANSITIONS MAY BE GRADUAL
2) WATER LEVEL READINGS HAVE BEEN MADE AT TIMES AND UNDER CONDITIONS STATED, FLUCTUATIONS OF GROUNDWATER MAY OCCUR DUE TO OTHER FACTORS THAN THOSE PRESENT AT THE TIME MEASUREMENTS WERE MADE.

Depth Below Surface
~0.5-Ft.



LABELLA Associates, P.C.

300 STATE STREET, ROCHESTER, NY
ENVIRONMENTAL ENGINEERING CONSULTANTS

TEST PIT LOG

PROJECT

BORING: TP-D
SHEET 1 OF 1
JOB: 209280
CHKD BY: ED

CONTRACTOR: Test Pit Location: TIME: 1000 TO 1045
Excavator: GROUND SURFACE ELEVATION: NA DATUM: NA
LABELLA REPRESENTATIVE: START DATE: 12/28/2009 END DATE: 12/28/2009
Weather:

DEPTH	SAMPLE NO. AND DEPTH		STRATA CHANGE	VISUAL CLASSIFICATION	PID FIELD SCREEN (PPM)	REMARKS
0			0.0'	Grass/Topsoil	0.0	
			0.3'	Brown, mc SAND and SILT, some c. Gravel, moist, no odor		
			1.0'	As above, moist, no odor	0.0	
			1.8'	Steel manhole cover encountered as part of sewer system		
				Bottom at approximately 1.8' BGS		
2						
4						
6						
8						
10						
12						

WATER LEVEL DATA			BOTTOM OF CASING	BOTTOM OF BORING	GROUNDWATER ENCOUNTERED
DATE	TIME	ELAPSED TIME			
				1.8-Ft.	Not Encountered

NOTES:

GENERAL NOTES

1) STRATIFICATION LINES REPRESENT APPROXIMATE BOUNDARY BETWEEN SOIL TYPES, TRANSITIONS MAY BE GRADUAL.

2) WATER LEVEL READINGS HAVE BEEN MADE AT TIMES AND UNDER CONDITIONS STATED, FLUCTUATIONS OF GROUNDWATER

3) Abbreviations

and = 35 to 50 %	c = coarse	
some = 20 to 35%	m = medium	BGS = Below the Ground Surface
little = 10 to 20%	f = fine	NA = Not Applicable
trace = 1 to 10%	vf = very fine	

BORING: TP-D

LABELLA Associates, P.C.

300 STATE STREET, ROCHESTER, NY
ENVIRONMENTAL ENGINEERING CONSULTANTS

TEST PIT LOG

PROJECT

BORING: TP-E
SHEET 1 OF 1
JOB: 209280
CHKD BY: ED

CONTRACTOR: Test Pit Location: TIME: 1100 TO 1130
Excavator: GROUND SURFACE ELEVATION: NA DATUM: NA
LABELLA REPRESENTATIVE: START DATE: 12/28/2009 END DATE: 12/28/2009
Weather:

DEPTH	SAMPLE NO. AND DEPTH	STRATA CHANGE	VISUAL CLASSIFICATION	PID FIELD SCREEN (PPM)	REMARKS
0		0.0'	Grass/Topsoil	0.0	
		0.2'	Brown, mc SAND some SILT and some c. Gravel, moist, no odor		
				0.0	
2				0.0	
				0.0	
4				0.0	
				0.0	
6				0.0	
			Concrete slab at bottom of test pit running along northern side of test pit.		
			Bottom at approximately 6.8' BGS		
8					
10					
12					

WATER LEVEL DATA			BOTTOM OF CASING	BOTTOM OF BORING	GROUNDWATER ENCOUNTERED
DATE	TIME	ELAPSED TIME			
				6.8-Ft.	Not Encountered

NOTES:

GENERAL NOTES

1) STRATIFICATION LINES REPRESENT APPROXIMATE BOUNDARY BETWEEN SOIL TYPES, TRANSITIONS MAY BE GRADUAL.

2) WATER LEVEL READINGS HAVE BEEN MADE AT TIMES AND UNDER CONDITIONS STATED, FLUCTUATIONS OF GROUNDWATER

3) Abbreviations

and = 35 to 50 %
some = 20 to 35%
little = 10 to 20%
trace = 1 to 10%

c = coarse
m = medium
f = fine
vf = very fine

BGS = Below the Ground Surface
NA = Not Applicable

BORING: TP-E

LABELLA Associates, P.C.

300 STATE STREET, ROCHESTER, NY
ENVIRONMENTAL ENGINEERING CONSULTANTS

TEST PIT LOG

PROJECT

BORING: TP-F
SHEET 1 OF 1
JOB: 209280
CHKD BY: ED

CONTRACTOR: Test Pit Location: TIME: 1145 TO 1230
Excavator: GROUND SURFACE ELEVATION: NA DATUM: NA
LABELLA REPRESENTATIVE: START DATE: 12/28/2009 END DATE: 12/28/2009
Weather:

DEPTH	SAMPLE NO. AND DEPTH		STRATA CHANGE	VISUAL CLASSIFICATION	PID FIELD SCREEN (PPM)	REMARKS
0			0.0'	Grass/Topsoil	0.0	
			0.2'	Lt. brown, mf SAND, little Silt, moist, no odor		
					0.0	
2					0.0	
					6.5	
4					2.3	
			5.2'	Brown, SILT and mf SAND, moist, no odor	0.0	
6					0.0	
					0.0	
8					0.0	
					0.0	
10					0.0	
				Concrete slab at bottom of test pit covering entire bottom of test pit.		
				Bottom at approximately 10.5' BGS		
12						

WATER LEVEL DATA			BOTTOM OF CASING	BOTTOM OF BORING	GROUNDWATER ENCOUNTERED
DATE	TIME	ELAPSED TIME			
				10.5-Ft.	Not Encountered

NOTES:

GENERAL NOTES

1) STRATIFICATION LINES REPRESENT APPROXIMATE BOUNDARY BETWEEN SOIL TYPES, TRANSITIONS MAY BE GRADUAL.

2) WATER LEVEL READINGS HAVE BEEN MADE AT TIMES AND UNDER CONDITIONS STATED, FLUCTUATIONS OF GROUNDWATER

3) Abbreviations

and = 35 to 50 %	c = coarse	
some = 20 to 35%	m = medium	BGS = Below the Ground Surface
little = 10 to 20%	f = fine	NA = Not Applicable
trace = 1 to 10%	vf = very fine	

BORING: TP-F

LABELLA Associates, P.C.

TEST PIT LOG

PROJECT
690 Saint Paul Street
Rochester, New York
BCP Site #C828159
IRM - AOCs #2 & #6 and RIWP Amendment - TCE Area

Test Pit: TP-TCE-01
SHEET 1 OF 1
JOB #: 209280
CHKD BY:

300 STATE STREET, ROCHESTER, NY
ENVIRONMENTAL ENGINEERING CONSULTANTS

CONTRACTOR: OpTech
EXCAVATOR: Hitachi Zaxis 160 LC
LABELLA REPRESENTATIVE: JMG
TEST PIT LOCATION: TCE Area
GROUND SURFACE ELEVATION:
DATE: 7/9/2012
TIME: 915 TO 1230
DATUM:
WEATHER:

DEPTH	SAMPLE NO. AND DEPTH		STRATA CHANGE	VISUAL CLASSIFICATION	PID FIELD SCREEN (PPM)	Remarks
0			3"	Asphalt and gravel	0.0	
				Brown CLAYEY SILT and fill (bricks, blocks from stone wall)		
			1'	Piece of metal pipe (3'L x 3"diam.), not connected to anything	0.0	
					0.0	
2			2'	Wire mesh		
				Old floor drain standpipe observed at approx. 2'BGS to 6.5'BGS. Every-thing below 6.5'BGS put into hazardous waste rolloff.	0.0	
					0.0	
4						
					0.0	
					0.0	
6						
					0.0	
					0.0	
8			8'			
				Brown CLAYEY SILT, some red CLAY, some fine gravel, slightly moist	0.0	
					0.0	
10						
	TP-TCE-01 N. Sidewall 11'-12'				0.0	
			11'			
	TP-TCE-01 S. Sidewall 12'			Brown CLAYEY SILT, some red CLAY, some f. gravel, moist, not saturated	2.3 4.8 14.6	North Wall North Wall South wall
12				Bedrock at 11.8'-12'; Groundwater at 11.5'		

WATER LEVEL DATA			BOTTOM OF	BOTTOM OF	GROUNDWATER	NOTES:
DATE	TIME	ELAPSED TIME	CASING	PIT	ENCOUNTERED	Installed piping for further injection. Filled in with 1' lifts
				11.8-Ft.	Approx. 11.5 -ft. BGS	

GENERAL NOTES
1) STRATIFICATION LINES REPRESENT APPROXIMATE BOUNDARY BETWEEN SOIL TYPES, TRANSITIONS MAY BE GRADUAL.
2) WATER LEVEL READINGS HAVE BEEN MADE AT TIMES AND UNDER CONDITIONS STATED.
3) ABBREVIATIONS:
and = 35 to 50 %
some = 20 to 35%
little = 10 to 20%
trace = 1 to 10%
c = coarse
m = medium
f = fine
vf = very fine
BGS = Below the Ground Surface
NA = Not Applicable

Test Pit: TP-TCE-01

LABELLA Associates, P.C.

300 STATE STREET, ROCHESTER, NY
ENVIRONMENTAL ENGINEERING CONSULTANTS

TEST PIT LOG

PROJECT
690 Saint Paul Street
Rochester, New York
BCP Site #C828159
IRM - AOCs #2 & #6 and RIWP Amendment - TCE Area

Test Pit: TP-TCE-02
SHEET 1 OF 1
JOB #: 209280
CHKD BY:

CONTRACTOR: OpTech
EXCAVATOR: Hitachi Zaxis 160 LC
LABELLA REPRESENTATIVE: JMG
TEST PIT LOCATION: TCE Area
GROUND SURFACE ELEVATION:
DATE: 7/10/2012
TIME: 845 TO 945
DATUM:
WEATHER:

DEPTH	SAMPLE NO. AND DEPTH		STRATA CHANGE	VISUAL CLASSIFICATION	PID FIELD SCREEN (PPM)	Remarks
0			3"	Asphalt/crusher		
				Brown SILT, some fine gravel, trace SAND	0.0	
					0.0	
2					0.0	
					2.3	
					3.6	
	TP-TCE-02		4'		1.2	
4	4' E. Sidewall			Brown SILT, some fine gravel, trace SAND, little crushed concrete (cobble-boulder sized, dark gray/weathered), little boulder sized rocks, rounded	3.2	
					1.2	
					0.4	
6					0.0	
					0.0	
					0.0	
8					0.0	
					0.0	
				BOE - 9.5'		
10						
12						

WATER LEVEL DATA			BOTTOM OF	BOTTOM OF	GROUNDWATER
DATE	TIME	ELAPSED TIME	CASING	PIT	ENCOUNTERED
				9.5-Ft.	NA

NOTES:
No refusal by 8' to expanded excavation further NNE. Approx. 6 buckets of haz soil removed (~2CY). Filled in w/ 1' lifts

GENERAL NOTES
1) STRATIFICATION LINES REPRESENT APPROXIMATE BOUNDARY BETWEEN SOIL TYPES, TRANSITIONS MAY BE GRADUAL.
2) WATER LEVEL READINGS HAVE BEEN MADE AT TIMES AND UNDER CONDITIONS STATED.
3) ABBREVIATIONS:
and = 35 to 50 %
some = 20 to 35%
little = 10 to 20%
trace = 1 to 10%
c = coarse
m = medium
f = fine
vf = very fine
BGS = Below the Ground Surface
NA = Not Applicable

Test Pit: TP-TCE-02

LABELLA Associates, P.C.

TEST PIT LOG

PROJECT
690 Saint Paul Street
Rochester, New York
BCP Site #C828159
IRM - AOCs #2 & #6 and RIWP Amendment - TCE Area

Test Pit: TP-TCE-03
SHEET 1 OF 1
JOB #: 209280
CHKD BY:

300 STATE STREET, ROCHESTER, NY
ENVIRONMENTAL ENGINEERING CONSULTANTS

CONTRACTOR: OpTech
EXCAVATOR: Hitachi Zaxis 160 LC
LABELLA REPRESENTATIVE: JMG
TEST PIT LOCATION: TCE Area
GROUND SURFACE ELEVATION:
DATE: 7/11/2012
TIME: 1020 TO ###
DATUM:
WEATHER:

DEPTH	SAMPLE NO. AND DEPTH		STRATA CHANGE	VISUAL CLASSIFICATION	PID FIELD SCREEN (PPM)	Remarks
0			2"	Asphalt/crusher		
				Coarse gravel (fill), some blue and black ripped pieces of poly	0.0	
			1.5'	Small piece of scrap metal (sign post?) - 2.5' long	0.0	
2				Black woven fabric (geo-fabric) below gravel		
			2.5'	Brown fine SAND and Brown SILT and chunks of red/brown CLAY (fill)	0.0	
					0.0	
4					0.0	
					0.0	
6					0.0	
					0.0	
8					0.0	
					0.0	
10					0.0	
			10.8'		3.0	
	TP-TCE-03 11.5' W. Sidewall			Gray, CLAYEY SILT, wet, some cobble-sized angular rock, some fine gravel, some coarse gravel	5.2	
12				Bedrock at 11.8'		

WATER LEVEL DATA			BOTTOM OF CASING	BOTTOM OF PIT	GROUNDWATER ENCOUNTERED
DATE	TIME	ELAPSED TIME			
				11.8-Ft.	Approx. 10.8-ft. BGS

NOTES:
Installed piping for further injection. Filled in with 1' lifts
Soils below 8.5'BGS put in haz rolloff

GENERAL NOTES
1) STRATIFICATION LINES REPRESENT APPROXIMATE BOUNDARY BETWEEN SOIL TYPES, TRANSITIONS MAY BE GRADUAL.
2) WATER LEVEL READINGS HAVE BEEN MADE AT TIMES AND UNDER CONDITIONS STATED.
3) ABBREVIATIONS:
and = 35 to 50 %
some = 20 to 35%
little = 10 to 20%
trace = 1 to 10%
c = coarse
m = medium
f = fine
vf = very fine
BGS = Below the Ground Surface
NA = Not Applicable

Test Pit: TP-TCE-03

LABELLA Associates, P.C.

300 STATE STREET, ROCHESTER, NY
ENVIRONMENTAL ENGINEERING CONSULTANTS

TEST PIT LOG

Phase II ESA: Test Pit Soil Sampling
Genessee Valley Real Estate Company
690 St. Paul St, Rochester, NY

Test Pit: TP-1
SHEET 1 OF 1
JOB:
CHKD BY:

CONTRACTOR: Chris Gullace
TEST PIT LOCATION: Center of Large Grass Lot, South of Parking Lot
TIME: 0812 TO 0935
EXCAVATOR: Kubota KX121-3 Super Seri
GROUND SURFACE ELEVATION: NA
DATUM: NA
LABELLA REPRESENTATIVE: J. Caswell
START DATE: 02-Jul-08
END DATE: 02-Jul-08

OVERBURDEN SAMPLING METHOD: Direct Grab
OTHER:

DEPTH	SAMPLE NO. AND DEPTH	STRATA CHANGE	VISUAL CLASSIFICATION	PID FIELD SCREEN (PPM)	REMARKS
0	S-1	0.0-ft. 0.1-ft.	**FILL MATERIAL** Grass, Topsoil - Not Samples SILT, some fine SAND, dark brown	47.0	
2	S-2	2.5'	SILT, some fine SAND, dark brown	40	E. Wall
	S-7	2.5'	SILT, some fine SAND, dark brown	473	N. Wall
	S-9	2.5'	Fill (GRAVEL and SILT), medium brown	64	S. Wall
	S-10	2.5'	Fill (GRAVEL and SILT), medium brown	65	W. Wall
4	S-3	5.0'	SILT, some fine SAND, dark brown	30.6	W. Bottom
	S-4	5.0'	Fill (GRAVEL and SILT), dark brown	65	Center
	S-5	5.0'	SILT, some fine SAND, dark brown	105.0	N. Bottom
	S-6	5.0'	SILT, some fine SAND, dark brown	565.0	E. Bottom
6					
8	S-20	8.0'	mf SAND, trace subangular pebble, black staining, strong petro odor	9999+	
10					
12					

WATER LEVEL DATA			BOTTOM OF TEST PIT	GROUNDWATER ENCOUNTERED
DATE	TIME	ELAPSED TIME		
			8.0-Ft.	4-5'

NOTES:

GENERAL NOTES

1) STRATIFICATION LINES REPRESENT APPROXIMATE BOUNDARY BETWEEN SOIL TYPES, TRANSITIONS MAY BE GRADUAL.

2) WATER LEVEL READINGS HAVE BEEN MADE AT TIMES AND UNDER CONDITIONS STATED, FLUCTUATIONS OF GROUNDWATER

3) Abbreviations

and = 35 to 50 %	c = coarse	
some = 20 to 35%	m = medium	BGS = Below the Ground Surface
little = 10 to 20%	f = fine	NA = Not Applicable
trace = 1 to 10%	vf = very fine	

BORING: TP-1

LABELLA Associates, P.C.

300 STATE STREET, ROCHESTER, NY
ENVIRONMENTAL ENGINEERING CONSULTANTS

TEST PIT LOG

Phase II ESA: Test Pit Soil Sampling
Genessee Valley Real Estate Company
690 St. Paul St, Rochester, NY

Test Pit: TP-3
SHEET 1 OF 1
JOB:
CHKD BY:

CONTRACTOR: Chris Gullace
EXCAVATOR: Kubota KX121-3 Super Seri
LABELLA REPRESENTATIVE: J. Caswell
TEST PIT LOCATION: Northwest Corner of Grass Lot, next to Building
GROUND SURFACE ELEVATION: NA
START DATE: 02-Jul-08
END DATE: 02-Jul-08
TIME: TO
DATUM: NA

OVERBURDEN SAMPLING METHOD: Direct Grab
OTHER:

DEPTH	SAMPLE NO. AND DEPTH	STRATA CHANGE	VISUAL CLASSIFICATION	PID FIELD SCREEN (PPM)	REMARKS
0			**FILL MATERIAL**		
2					
4					
	S-17	5.0'	Fill	0	
6					
8	S-18	8.0'	Fill	0.0	
10					
12					

WATER LEVEL DATA			BOTTOM OF TEST PIT	GROUNDWATER ENCOUNTERED
DATE	TIME	ELAPSED TIME		
			8.0-Ft.	4-5'

NOTES:

GENERAL NOTES

1) STRATIFICATION LINES REPRESENT APPROXIMATE BOUNDARY BETWEEN SOIL TYPES, TRANSITIONS MAY BE GRADUAL.

2) WATER LEVEL READINGS HAVE BEEN MADE AT TIMES AND UNDER CONDITIONS STATED, FLUCTUATIONS OF GROUNDWATER

3) Abbreviations

and = 35 to 50 %
some = 20 to 35%
little = 10 to 20%
trace = 1 to 10%
c = coarse
m = medium
f = fine
vf = very fine
BGS = Below the Ground Surface
NA = Not Applicable

BORING: TP-3

LABELLA Associates, P.C.

300 STATE STREET, ROCHESTER, NY
ENVIRONMENTAL ENGINEERING CONSULTANTS

TEST PIT LOG

Phase II ESA: Test Pit Soil Sampling
Genessee Valley Real Estate Company
690 St. Paul St, Rochester, NY

Test Pit: TP-2
SHEET 1 OF 1
JOB:
CHKD BY:

CONTRACTOR: Chris Gullace
TEST PIT LOCATION: In Southern, Central Section of Grass Lot near Sidewalk
TIME: 0812 TO 0935
EXCAVATOR: Kubota KX121-3 Super Seri
GROUND SURFACE ELEVATION: NA
DATUM: NA
LABELLA REPRESENTATIVE: J. Caswell
START DATE: 02-Jul-08
END DATE: 02-Jul-08

OVERBURDEN SAMPLING METHOD: Direct Grab
OTHER:

DEPTH	SAMPLE NO. AND DEPTH	STRATA CHANGE	VISUAL CLASSIFICATION	PID FIELD SCREEN (PPM)	REMARKS
0		0.0-ft.	**FILL MATERIAL** Grass, Topsoil - Not Samples		
2	S-11 S-12	2.5' 2.5'	Fill (SAND, Sub-angular pebbles), grey - medium brown Fill (GRAVEL, SAND), grey - brown	85 66	E. Wall W. Wall
4	S-13 S-14 S-15 S-16	5.0' 5.0' 5.0' 5.0'	Fill (SAND and subangular pebbles), med-brown Fill (SAND and subangular pebbles), med-brown Fill (SAND and subangular pebbles), med-brown Fill (SAND and subangular pebbles), med-brown	75 50 70.0 55.0	E. Bottom S. Bottom W. Bttom N. Bottom
6					
8	S-21	8.0'	Fill(concrete, brick, gravel, SILT), petrol odor	3,600.0	
10					
12					

WATER LEVEL DATA			BOTTOM OF TEST PIT	GROUNDWATER ENCOUNTERED
DATE	TIME	ELAPSED TIME		
			8.0-Ft.	4-5'

NOTES:

GENERAL NOTES

1) STRATIFICATION LINES REPRESENT APPROXIMATE BOUNDARY BETWEEN SOIL TYPES, TRANSITIONS MAY BE GRADUAL.

2) WATER LEVEL READINGS HAVE BEEN MADE AT TIMES AND UNDER CONDITIONS STATED, FLUCTUATIONS OF GROUNDWATER

3) Abbreviations

and = 35 to 50 %	c = coarse	
some = 20 to 35%	m = medium	BGS = Below the Ground Surface
little = 10 to 20%	f = fine	NA = Not Applicable
trace = 1 to 10%	vf = very fine	

BORING: TP-2

LABELLA Associates, P.C.

300 STATE STREET, ROCHESTER, NY
ENVIRONMENTAL ENGINEERING CONSULTANTS

TEST PIT LOG

Phase II ESA: Test Pit Soil Sampling
Genessee Valley Real Estate Company
690 St. Paul St, Rochester, NY

Test Pit: TP-4
SHEET 1 OF 1
JOB:
CHKD BY:

CONTRACTOR: Chris Gullace
TEST PIT LOCATION: In the Northern, Central Section of Grass Lot near Sidewalk and Parking Lot
TIME: 0812 TO 0935
EXCAVATOR: Kubota KX121-3 Super Seri
GROUND SURFACE ELEVATION: NA
DATUM: NA
LABELLA REPRESENTATIVE: C. A. Stiles
START DATE: 02-Jul-08
END DATE: 02-Jul-08

OVERBURDEN SAMPLING METHOD: Direct Grab
OTHER:

DEPTH	SAMPLE NO. AND DEPTH	STRATA CHANGE	VISUAL CLASSIFICATION	PID FIELD SCREEN (PPM)	REMARKS
0			**FILL MATERIAL**		
2					
4					
6	S-19	7.5'	Course GRAVEL, petroleum odor	100	Free Floating Oil
8					
10					
12					

WATER LEVEL DATA			BOTTOM OF TEST PIT	GROUNDWATER ENCOUNTERED
DATE	TIME	ELAPSED TIME		
			7.5-Ft.	4-5'

NOTES:

GENERAL NOTES

1) STRATIFICATION LINES REPRESENT APPROXIMATE BOUNDARY BETWEEN SOIL TYPES, TRANSITIONS MAY BE GRADUAL.

2) WATER LEVEL READINGS HAVE BEEN MADE AT TIMES AND UNDER CONDITIONS STATED, FLUCTUATIONS OF GROUNDWATER

3) Abbreviations

and = 35 to 50 %
some = 20 to 35%
little = 10 to 20%
trace = 1 to 10%
c = coarse
m = medium
f = fine
vf = very fine
BGS = Below the Ground Surface
NA = Not Applicable

BORING: TP-4

LABELLA Associates, P.C.

300 STATE STREET, ROCHESTER, NY
ENVIRONMENTAL ENGINEERING CONSULTANTS

TEST PIT LOG

Phase II ESA: Test Pit Soil Sampling
Genessee Valley Real Estate Company
690 St. Paul St, Rochester, NY

Test Pit: TP-5
SHEET 1 OF 1
JOB:
CHKD BY:

CONTRACTOR: Chris Gullace
EXCAVATOR: Kubota KX121-3 Super Seri
LABELLA REPRESENTATIVE: J. Caswell
TEST PIT LOCATION: Southeast corner of Grass Lot near Street Sidewalk
GROUND SURFACE ELEVATION: NA
START DATE: 02-Jul-08
END DATE: 02-Jul-08
TIME: TO
DATUM: NA

OVERBURDEN SAMPLING METHOD: Direct Grab
OTHER:

DEPTH	SAMPLE NO. AND DEPTH	STRATA CHANGE	VISUAL CLASSIFICATION	PID FIELD SCREEN (PPM)	REMARKS
0			**FILL MATERIAL**		
2					
4					
	S-22	5.0-7.0'	Fill Material	9999+	
6					
8					
10					
12					

WATER LEVEL DATA			BOTTOM OF TEST PIT	GROUNDWATER ENCOUNTERED
DATE	TIME	ELAPSED TIME		
			7.0-Ft.	4-5'

NOTES:

GENERAL NOTES

1) STRATIFICATION LINES REPRESENT APPROXIMATE BOUNDARY BETWEEN SOIL TYPES, TRANSITIONS MAY BE GRADUAL.

2) WATER LEVEL READINGS HAVE BEEN MADE AT TIMES AND UNDER CONDITIONS STATED, FLUCTUATIONS OF GROUNDWATER

3) Abbreviations

and = 35 to 50 %
some = 20 to 35%
little = 10 to 20%
trace = 1 to 10%
c = coarse
m = medium
f = fine
vf = very fine
BGS = Below the Ground Surface
NA = Not Applicable

BORING: TP-5

LABELLA Associates, P.C.

300 STATE STREET, ROCHESTER, NY
ENVIRONMENTAL ENGINEERING CONSULTANTS

TEST PIT LOG

Phase II ESA: Test Pit Soil Sampling
Genessee Valley Real Estate Company
690 St. Paul St, Rochester, NY

Test Pit: **TP-6**
SHEET 1 OF 1
JOB:
CHKD BY:

CONTRACTOR: Chris Gullace
EXCAVATOR: Kubota KX121-3 Super Seri
LABELLA REPRESENTATIVE: J. Caswell
TEST PIT LOCATION: Northeast Corner of Grass Lot, near street Sidewalk
GROUND SURFACE ELEVATION: NA
START DATE: 02-Jul-08
END DATE: 02-Jul-08
TIME: TO
DATUM: NA

OVERBURDEN SAMPLING METHOD: Direct Grab
OTHER:

DEPTH	SAMPLE NO. AND DEPTH	STRATA CHANGE	VISUAL CLASSIFICATION	PID FIELD SCREEN (PPM)	REMARKS
0			**FILL MATERIAL**		
2					
4					
6	S-23	7.0'	SAND- black staining, petroleum odor	1,990	
8	S-24	8.0'	SAND - black staining petroleum odor	1,742.0	
	S-25	8.0'	SAND - black staining petroleum odor	1,742.0	
10					
12					

WATER LEVEL DATA			BOTTOM OF TEST PIT	GROUNDWATER ENCOUNTERED
DATE	TIME	ELAPSED TIME		
			8.0-Ft.	4-5'

NOTES:

GENERAL NOTES

1) STRATIFICATION LINES REPRESENT APPROXIMATE BOUNDARY BETWEEN SOIL TYPES, TRANSITIONS MAY BE GRADUAL.

2) WATER LEVEL READINGS HAVE BEEN MADE AT TIMES AND UNDER CONDITIONS STATED, FLUCTUATIONS OF GROUNDWATER

3) Abbreviations

and = 35 to 50 %
some = 20 to 35%
little = 10 to 20%
trace = 1 to 10%
c = coarse
m = medium
f = fine
vf = very fine
BGS = Below the Ground Surface
NA = Not Applicable

BORING: **TP-6**

LABELLA Associates, P.C.

300 STATE STREET, ROCHESTER, NY
ENVIRONMENTAL ENGINEERING CONSULTANTS

TEST PIT LOG

Phase II ESA: Test Pit Soil Sampling
Genessee Valley Real Estate Company
690 St. Paul St, Rochester, NY

Test Pit: TP-7
SHEET 1 OF 1
JOB:
CHKD BY:

CONTRACTOR: Chris Gullace
EXCAVATOR: Kubota KX121-3 Super Seri
LABELLA REPRESENTATIVE: C. A. Stiles
TEST PIT LOCATION: In the Southwest Corner of Grass Lot, Near Building
GROUND SURFACE ELEVATION: NA
START DATE: 02-Jul-08
END DATE: 02-Jul-08
TIME: 0812 TO 0935
DATUM: NA

OVERBURDEN SAMPLING METHOD: Direct Grab
OTHER:

DEPTH	SAMPLE NO. AND DEPTH	STRATA CHANGE	VISUAL CLASSIFICATION	PID FIELD SCREEN (PPM)	REMARKS
0			**FILL MATERIAL**		
2					
4					
		5.0'	Fill - Slight discoloration , no odor		
6					
8	S-26	8.0'	Fill- No odor	24.1	
10					
12					

WATER LEVEL DATA			BOTTOM OF TEST PIT	GROUNDWATER ENCOUNTERED
DATE	TIME	ELAPSED TIME		
			8.0-Ft.	Not Encountered

NOTES:

GENERAL NOTES

1) STRATIFICATION LINES REPRESENT APPROXIMATE BOUNDARY BETWEEN SOIL TYPES, TRANSITIONS MAY BE GRADUAL.

2) WATER LEVEL READINGS HAVE BEEN MADE AT TIMES AND UNDER CONDITIONS STATED, FLUCTUATIONS OF GROUNDWATER

3) Abbreviations

and = 35 to 50 %
some = 20 to 35%
little = 10 to 20%
trace = 1 to 10%
c = coarse
m = medium
f = fine
vf = very fine
BGS = Below the Ground Surface
NA = Not Applicable

BORING: TP-7

LABELLA Associates, P.C.

300 STATE STREET, ROCHESTER, NY
ENVIRONMENTAL ENGINEERING CONSULTANTS

TEST PIT LOG

Phase II ESA: Test Pit Soil Sampling
Genessee Valley Real Estate Company
690 St. Paul St, Rochester, NY

Test Pit: **TP-8**
SHEET 1 OF 1
JOB:
CHKD BY:

CONTRACTOR: Chris Gullace TEST PIT LOCATION: In Smaller Grass Lot, South of Sidewalk TIME: TO
EXCAVATOR: Kubota KX121-3 Super Seri GROUND SURFACE ELEVATION: NA DATUM: NA
LABELLA REPRESENTATIVE: J. Caswell START DATE: 02-Jul-08 END DATE: 02-Jul-08

OVERBURDEN SAMPLING METHOD: Direct Grab OTHER:

DEPTH	SAMPLE NO. AND DEPTH	STRATA CHANGE	VISUAL CLASSIFICATION	PID FIELD SCREEN (PPM)	REMARKS
0			**FILL MATERIAL**		
2					
4	S-27	4.0'	Fill	28.0	
6					
8					
10					
12					

WATER LEVEL DATA			BOTTOM OF TEST PIT	GROUNDWATER ENCOUNTERED
DATE	TIME	ELAPSED TIME		
			5.0-Ft.	Not Encountered

NOTES:

GENERAL NOTES

1) STRATIFICATION LINES REPRESENT APPROXIMATE BOUNDARY BETWEEN SOIL TYPES, TRANSITIONS MAY BE GRADUAL.

2) WATER LEVEL READINGS HAVE BEEN MADE AT TIMES AND UNDER CONDITIONS STATED, FLUCTUATIONS OF GROUNDWATER

3) Abbreviations

and = 35 to 50 %
some = 20 to 35%
little = 10 to 20%
trace = 1 to 10%
c = coarse
m = medium
f = fine
vf = very fine
BGS = Below the Ground Surface
NA = Not Applicable

BORING: **TP-8**

LABELLA Associates, P.C.

300 STATE STREET, ROCHESTER, NY
ENVIRONMENTAL ENGINEERING CONSULTANTS

TEST PIT LOG

Phase II ESA: Test Pit Soil Sampling
Genessee Valley Real Estate Company
690 St. Paul St, Rochester, NY

Test Pit: **TP-9**
SHEET 1 OF 1
JOB:
CHKD BY:

CONTRACTOR: Son of Owner
EXCAVATOR: Kubota KX121-3 Super Seri
LABELLA REPRESENTATIVE: J. Caswell
TEST PIT LOCATION: On Small Grass Lot, South of Parking Lot Entrance, near Street Sidewalk
GROUND SURFACE ELEVATION: NA
START DATE: 02-Jul-08
END DATE: 02-Jul-08
TIME: TO
DATUM: NA

OVERBURDEN SAMPLING METHOD: Direct Grab
OTHER:

DEPTH	SAMPLE NO. AND DEPTH	STRATA CHANGE	VISUAL CLASSIFICATION	PID FIELD SCREEN (PPM)	REMARKS
0			**FILL MATERIAL**		
2					
4	S-28	5.0'	Fill material- Black staining, petroleum odor	250.0	
6		7.5'	Fill material - Black staining, petroleum odor	3,750.0	
8					
10					
12					

WATER LEVEL DATA			BOTTOM OF TEST PIT	GROUNDWATER ENCOUNTERED	NOTES:
DATE	TIME	ELAPSED TIME			
			7.5-Ft.	Not Encountered	Lots of pipeing

GENERAL NOTES

1) STRATIFICATION LINES REPRESENT APPROXIMATE BOUNDARY BETWEEN SOIL TYPES, TRANSITIONS MAY BE GRADUAL.

2) WATER LEVEL READINGS HAVE BEEN MADE AT TIMES AND UNDER CONDITIONS STATED, FLUCTUATIONS OF GROUNDWATER

3) Abbreviations

and = 35 to 50 %
some = 20 to 35%
little = 10 to 20%
trace = 1 to 10%

c = coarse
m = medium
f = fine
vf = very fine

BGS = Below the Ground Surface
NA = Not Applicable

BORING: **TP-9**

LABELLA Associates, P.C.

300 STATE STREET, ROCHESTER, NY
(585) 454-6110

BORING LOG
Remedial Measures NYSDEC BCP Site #C828159
690 St. Paul Street
Rochester, New York
Well Installations

BORING: **TW-1**
SHEET 1 OF 2
JOB: **209280**
CHKD BY:

CONTRACTOR: NYEG
DRILLER: Brian G.
LABELLA REPRESENTATIVE: KR Miller

BORING LOCATION: SOUTHERNMOST IN ALLEY/LOADING DOCK AREA
TYPE OF WELL: TREATMENT WELL
GROUND SURFACE ELEVATION: DATUM:
START DATE: 7/8/2015 END DATE: 7/15/2015

TYPE OF DRILL RIG: MOBILE B-59 TRUCK MTD.
AUGER SIZE AND TYPE: 8.25-INCH HOLLOW STEM
OVERBURDEN SAMPLING METHOD: 2-INCH SPLIT SPOON

DRIVE SAMPLER TYPE: SPLIT SPOON
INSIDE DIAMETER:
ROCK CORE BARREL: NX

DEPTH (FEET)	SAMPLE RECOVERY	RQD Value (%)	SAMPLE NO. AND DEPTH (FEET)	STRATA CHANGE (FEET)	VISUAL CLASSIFICATION	PID FIELD SCREEN (PPM)	DEPTH (FEET)	NOTE
0	<0.5	N/A	S-1 0 - 0.5		Poor recovery due to split spoon refusal @ 0.5´ (cobble) Dark Gray to Black Granular Fill Material	0.0		
2					Hand auger refusal at 1´; two (2) 4-inch cast iron pipes found at this depth			
	<0.5	N/A	S-2 2 - 4		Poor recovery. Fill Material, Coarse Gravel and Small Cobbles, rounded, brown/gray	0.0		
4	0	N/A	S-3 4 - 4.5		Split spoon refusal @ 4.5´. No recovery.			
6					Auger to 7´; hard augering, boulder or weathered bedrock.			
	0	N/A	S-4 7 - 7.1		Split spoon refusal @ 7.1´. No recovery.			
8					Auger to 9´; driller reports feels like weathered bedrock. Dark Brownish-gray auger cuttings (hot) screened with PID	10		Sample auger cuttings
10	0.6	N/A	S-5 9.5 - 11.5		Gray weathered/broken rock. Dolostone, brown and dark Gray. Gray cf Sand @ 11.5´.	0.3		
12					Auger to 12.5´.			
	0	N/A	S-6 12.5 - 14.5		No recovery, broken rock. Screen Aiuger cuttings from 12.5´ to 13´ with PID. Augers on weathered bedrock @ 13´.	2.5		
14					Apparent competent bedrock @ 15´. Set steel casing @ 15´.			
16								

WATER LEVEL DATA				DEPTH (FT)			NOTES:
DATE	TIME		ELAPSED TIME	BOTTOM OF CASING	BOTTOM OF BORING	GROUNDWATER ENCOUNTERED	Set 8-inch diameter steel casing to 15´ below grade on 7/13/2015. After coring rock, hole in rock created to 25´ with a 7 7/8-inch roller bit. Driller reports losing ±100 gallons of water during coring and reaming of rock hole.
				15	25	yes	

GENERAL NOTES

1) STRATIFICATION LINES REPRESENT APPROXIMATE BOUNDARY BETWEEN SOIL TYPES, TRANSITIONS MAY BE GRADUAL.
2) WATER LEVEL READINGS HAVE BEEN MADE AT TIMES AND UNDER CONDITIONS STATED, FLUCTUATIONS OF GROUNDWATER

and = 35 to 50 %
some = 20 to 35%
little = 10 to 20%
trace = 1 to 10%
c - coarse
m = medium
f = fine
ND = Non Detect
BGS = Below the Ground Surface
NA = Not Applicable

LABELLA Associates, P.C. 300 STATE STREET, ROCHESTER, NY (585) 454-6110	**BORING LOG** Remedial Measures NYSDEC BCP Site #C828159 690 St. Paul Street Rochester, New York Well Installations	**BORING:** **TW-1** SHEET 2 OF 2 **JOB:** **209280** CHKD BY:

CONTRACTOR: NYEG
DRILLER: Brian G.
LABELLA REPRESENTATIVE: S Rife
BORING LOCATION: SOUTHERNMOST IN ALLEY/LOADING DOCK AREA
TYPE OF WELL: TREATMENT WELL
GROUND SURFACE ELEVATION: DATUM:
START DATE: 7/8/2015 END DATE: 7/15/2015

TYPE OF DRILL RIG: MOBILE B-59 TRUCK MTD.
AUGER SIZE AND TYPE: 8.25-INCH HOLLOW STEM
ROCK DRILLING METHOD: NX CORE
DRIVE SAMPLER TYPE: N/A
INSIDE DIAMETER:
ROCK CORE BARREL: NX

DEPTH (FEET)	SAMPLE RECOVERY	RQD Value (%)	SAMPLE NO. AND DEPTH (FEET)	STRATA CHANGE (FEET)	VISUAL CLASSIFICATION	PID FIELD SCREEN (PPM)	DEPTH (FEET)	NOTE
16	66%	1500%	Run 1 15´ - 20´		Medium to dark gray, fine-grained, non-fossiliferous Dolostone that is highly to moderately fractured. Fractures are mostly horizontal, but some low-angle and vertical fractures are present. Secondary crystallization is in some horizontal and low angle fractures (rare). Larger Poor recovery, so difficult to determine depths. Horizontal Fractures in rock core: 15.5´; 15.7´; 16.3´; 16.5´; 16.6´; 16.9´; 16.95´; 17.2´; 17.6´; 18.3´; 18.5´. Highly Fractured Zones: 15´ to 15.5´; 15.7´ to 16.3´; ±18´.			
18								
20								
22	100%	1800%	Run 2 20´ - 25´		Rock core appears similar to above. Horizontal Fractures in rock core: 22.0´; 22.15´; 22.25´; 22.3´; 22.4´; 22.6´; 22.7´; 22.8´; 23.0´; 23.35´.			
24					Highly Fractured Zone: 20´ to 22´.			
26					End of Boring @ 25´			
28								
30								
32								

WATER LEVEL DATA				DEPTH (FT)			NOTES:
DATE	TIME		ELAPSED TIME	BOTTOM OF CASING	BOTTOM OF BORING	GROUNDWATER ENCOUNTERED	Set 8-inch diameter steel casing to 15´ below grade on 7/13/2015. After coring rock, hole in rock created to 25´ with a 7 7/8-inch roller bit. Driller reports losing ±100 gallons of water during coring and reaming of rock hole.
				15	25	yes	

GENERAL NOTES

1) STRATIFICATION LINES REPRESENT APPROXIMATE BOUNDARY BETWEEN SOIL TYPES, TRANSITIONS MAY BE GRADUAL.
2) WATER LEVEL READINGS HAVE BEEN MADE AT TIMES AND UNDER CONDITIONS STATED, FLUCTUATIONS OF GROUNDWATER

and = 35 to 50 %	little = 10 to 20%	c - coarse	ND = Non Detect
some = 20 to 35%	trace = 1 to 10%	m = medium	BGS = Below the Ground Surface
		f = fine	NA = Not Applicable

LABELLA Associates, P.C.

300 STATE STREET, ROCHESTER, NY
(585) 454-6110

BORING LOG
Remedial Measures NYSDEC BCP Site #C828159
690 St. Paul Street
Rochester, New York
Well Installations

BORING: **TW-2**
SHEET 1 OF 2
JOB: **209280**
CHKD BY:

CONTRACTOR: NYEG
DRILLER: Brian G.
LABELLA REPRESENTATIVE: S Rife

BORING LOCATION: ALLEY/LOADING DOCK AREA; ±14´ NORTH OF TW-1
TYPE OF WELL: TREATMENT WELL
GROUND SURFACE ELEVATION: DATUM:
START DATE: 7/13/2015 END DATE: 7/17/2015

TYPE OF DRILL RIG: MOBILE B-59 TRUCK MTD.
AUGER SIZE AND TYPE: 8.25-INCH HOLLOW STEM
OVERBURDEN SAMPLING METHOD: 2-INCH SPLIT SPOON

DRIVE SAMPLER TYPE: SPLIT SPOON
INSIDE DIAMETER:
OTHER:

DEPTH (FEET)	SAMPLE RECOVERY	RQD Value (%)	SAMPLE NO. AND DEPTH (FEET)	STRATA CHANGE (FEET)	VISUAL CLASSIFICATION	PID FIELD SCREEN (PPM)	DEPTH (FEET)	NOTE
0	0	N/A	S-1 0 - 2		No recovery. Trace asphalt chunks in tip of sampler. Hand auger refusal at 1´; two (2) 4-inch cast iron pipes found at this depth			
2	0	N/A	S-2 2 - 4		No recovery.			
4	0.17		S-3 4 - 6	4	Brown mf Sand and mc Gravel, moist, no odor	0.0		Cable caught in winch
6	1.6		S-4 6 - 8		As above, very coarse sub-angular Gravel.	5.2		Sample 7´- 8´
8	0.66		S-5 8 - 9.5		As above.	1.1		
10					Top of weathered bedrock @ 9.5´. Fractured bedrock, wet Sand and VC A Gravel.			
12						0.7		Sample 12´- 12.8´
14					Apparent competent bedrock @ 12.8´. Set steel casing @ 12.8´. Hole in rock created with a 7 7/8-inch roller bit.			
16								

WATER LEVEL DATA				DEPTH (FT)			NOTES:
DATE	TIME		ELAPSED TIME	BOTTOM OF CASING	BOTTOM OF BORING	GROUNDWATER ENCOUNTERED	Set 8-inch diameter steel casing to12.8´ below grade on 7/14/2015. No coring of rock; hole in rock to 25.5´ created with a 7 7/8-inch roller bit. Driller reports losing ±80 gallons of water during reaming of rock hole.
				12.8	25.5	yes	

GENERAL NOTES

1) STRATIFICATION LINES REPRESENT APPROXIMATE BOUNDARY BETWEEN SOIL TYPES, TRANSITIONS MAY BE GRADUAL.
2) WATER LEVEL READINGS HAVE BEEN MADE AT TIMES AND UNDER CONDITIONS STATED, FLUCTUATIONS OF GROUNDWATER

and = 35 to 50 %
some = 20 to 35%
little = 10 to 20%
trace = 1 to 10%
c - coarse
m = medium
f = fine
ND = Non Detect
BGS = Below the Ground Surface
NA = Not Applicable

LABELLA Associates, P.C.
300 STATE STREET, ROCHESTER, NY
(585) 454-6110

BORING LOG
Remedial Measures NYSDEC BCP Site #C828159
690 St. Paul Street
Rochester, New York
Well Installations

BORING: **TW-2**
SHEET 2 OF 2
JOB: **209280**
CHKD BY:

CONTRACTOR: NYEG
DRILLER: Brian G.
LABELLA REPRESENTATIVE: S Rife

BORING LOCATION: ALLEY/LOADING DOCK AREA; ±14´ NORTH OF TW-1
TYPE OF WELL: TREATMENT WELL
GROUND SURFACE ELEVATION: DATUM:
START DATE: 7/13/2015 END DATE: 7/17/2015

TYPE OF DRILL RIG: MOBILE B-59 TRUCK MTD.
AUGER SIZE AND TYPE: 8.25-INCH HOLLOW STEM
OVERBURDEN SAMPLING METHOD: 2-INCH SPLIT SPOON

DRIVE SAMPLER TYPE: SPLIT SPOON
INSIDE DIAMETER:
OTHER:

DEPTH (FEET)	SAMPLE RECOVERY	RQD Value (%)	SAMPLE NO. AND DEPTH (FEET)	STRATA CHANGE (FEET)	VISUAL CLASSIFICATION	PID FIELD SCREEN (PPM)	DEPTH (FEET)	NOTE
16								
18								
20					Hole in rock created with a 7 7/8-inch roller bit.			
22								
24					End of Boring @ 25.5´			
26								
28								
30								
32								

WATER LEVEL DATA				DEPTH (FT)			NOTES:
DATE	TIME		ELAPSED TIME	BOTTOM OF CASING	BOTTOM OF BORING	GROUNDWATER ENCOUNTERED	Set 8-inch diameter steel casing to12.8´ below grade on 7/14/2015. No coring of rock; hole in rock to 25.5´ created with a 7 7/8-inch roller bit. Driller reports losing ±80 gallons of water during reaming of rock hole.
				12.8	25.5	yes	

GENERAL NOTES

1) STRATIFICATION LINES REPRESENT APPROXIMATE BOUNDARY BETWEEN SOIL TYPES, TRANSITIONS MAY BE GRADUAL.
2) WATER LEVEL READINGS HAVE BEEN MADE AT TIMES AND UNDER CONDITIONS STATED, FLUCTUATIONS OF GROUNDWATER

and = 35 to 50 %
some = 20 to 35%
little = 10 to 20%
trace = 1 to 10%
c - coarse
m = medium
f = fine
ND = Non Detect
BGS = Below the Ground Surface
NA = Not Applicable

LABELLA Associates, P.C.
300 STATE STREET, ROCHESTER, NY
(585) 454-6110

BORING LOG
Remedial Measures NYSDEC BCP Site #C828159
690 St. Paul Street
Rochester, New York
Well Installations

BORING: **TW-3**
SHEET 1 OF 1
JOB: **209280**
CHKD BY:

CONTRACTOR: NYEG
DRILLER: Brian G.
LABELLA REPRESENTATIVE: S Rife / KR Miller

BORING LOCATION: NORTHERNMOST IN ALLEY/LOADING DOCK AREA
TYPE OF WELL: TREATMENT WELL
GROUND SURFACE ELEVATION: DATUM:
START DATE: 7/17/2015 END DATE: 7/21/2015

TYPE OF DRILL RIG: MOBILE B-59 TRUCK MTD.
AUGER SIZE AND TYPE: 8.25-INCH HOLLOW STEM
OVERBURDEN SAMPLING METHOD: N/A

DRIVE SAMPLER TYPE:
INSIDE DIAMETER:
OTHER:

DEPTH (FEET)	SAMPLE RECOVERY	RQD Value (%)	SAMPLE NO. AND DEPTH (FEET)	STRATA CHANGE (FEET)	VISUAL CLASSIFICATION	PID FIELD SCREEN (PPM)	DEPTH (FEET)	NOTE
0								
2								
4								
6								
8								
10					Auger and Roller Bit Refusal encountered at 11.6´; possible concrete footer. Will move this well location ±2.5´ to the south (TW-3A).			
12					Refusal at 11.6´.			
14								
16								

WATER LEVEL DATA				DEPTH (FT) BOTTOM OF CASING	DEPTH (FT) BOTTOM OF BORING	DEPTH (FT) GROUNDWATER ENCOUNTERED
DATE	TIME		ELAPSED TIME			
				N/A	11.6	

NOTES:

GENERAL NOTES

1) STRATIFICATION LINES REPRESENT APPROXIMATE BOUNDARY BETWEEN SOIL TYPES, TRANSITIONS MAY BE GRADUAL.
2) WATER LEVEL READINGS HAVE BEEN MADE AT TIMES AND UNDER CONDITIONS STATED, FLUCTUATIONS OF GROUNDWATER

and = 35 to 50 %
some = 20 to 35%
little = 10 to 20%
trace = 1 to 10%
c - coarse
m = medium
f = fine
ND = Non Detect
BGS = Below the Ground Surface
NA = Not Applicable

LABELLA Associates, P.C.

300 STATE STREET, ROCHESTER, NY
(585) 454-6110

BORING LOG
Remedial Measures NYSDEC BCP Site #C828159
690 St. Paul Street
Rochester, New York
Well Installations

BORING: **TW-3A**
SHEET 1 OF 2
JOB: **209280**
CHKD BY:

CONTRACTOR: NYEG
DRILLER: Brian G.
LABELLA REPRESENTATIVE: KR Miller

BORING LOCATION: ALLEY/LOADING DOCK AREA
TYPE OF WELL: TREATMENT WELL
GROUND SURFACE ELEVATION: DATUM:
START DATE: 7/21/2015 END DATE: 7/24/2015

TYPE OF DRILL RIG: MOBILE B-59 TRUCK MTD.
AUGER SIZE AND TYPE: 8.25-INCH HOLLOW STEM
OVERBURDEN SAMPLING METHOD: N/A

DRIVE SAMPLER TYPE: SPLIT SPOON
INSIDE DIAMETER:
OTHER:

DEPTH (FEET)	SAMPLE RECOVERY	RQD Value (%)	SAMPLE NO. AND DEPTH (FEET)	STRATA CHANGE (FEET)	VISUAL CLASSIFICATION	PID FIELD SCREEN (PPM)	DEPTH (FEET)	NOTE
0					Augered to apparent competent rock at 16´, and set 8-inch diameter steel casing to 16´ below grade on 7/21/2015. Casing cement did not hold, so re-set casing at 16.7´ on 7/22/2015.			
2								
4								
6								
8								
10								
12								
14								
16								

WATER LEVEL DATA				DEPTH (FT)			NOTES:
DATE	TIME		ELAPSED TIME	BOTTOM OF CASING	BOTTOM OF BORING	GROUNDWATER ENCOUNTERED	No coring of rock; hole in rock created to 26´ with a 7 7/8-inch roller bit. Driller reports losing 50 to 80 gallons of water during reaming of rock hole. Driller reports most drilling water lost in deeper rock (>15´).
				16.7	26		

GENERAL NOTES

1) STRATIFICATION LINES REPRESENT APPROXIMATE BOUNDARY BETWEEN SOIL TYPES, TRANSITIONS MAY BE GRADUAL.
2) WATER LEVEL READINGS HAVE BEEN MADE AT TIMES AND UNDER CONDITIONS STATED, FLUCTUATIONS OF GROUNDWATER

and = 35 to 50 %
some = 20 to 35%
little = 10 to 20%
trace = 1 to 10%
c - coarse
m = medium
f = fine
ND = Non Detect
BGS = Below the Ground Surface
NA = Not Applicable

LABELLA Associates, P.C.
300 STATE STREET, ROCHESTER, NY
(585) 454-6110

BORING LOG
Remedial Measures NYSDEC BCP Site #C828159
690 St. Paul Street
Rochester, New York
Well Installations

BORING: **TW-3A**
SHEET 2 OF 2
JOB: **209280**
CHKD BY:

CONTRACTOR: NYEG
DRILLER: Brian G.
LABELLA REPRESENTATIVE: KR Miller
BORING LOCATION: ALLEY/LOADING DOCK AREA
TYPE OF WELL: TREATMENT WELL
GROUND SURFACE ELEVATION: DATUM:
START DATE: 7/21/2015 END DATE: 7/24/2015

TYPE OF DRILL RIG: MOBILE B-59 TRUCK MTD.
AUGER SIZE AND TYPE: 8.25-INCH HOLLOW STEM
OVERBURDEN SAMPLING METHOD: N/A
DRIVE SAMPLER TYPE: SPLIT SPOON
INSIDE DIAMETER:
OTHER:

DEPTH (FEET)	SAMPLE RECOVERY	RQD Value (%)	SAMPLE NO. AND DEPTH (FEET)	STRATA CHANGE (FEET)	VISUAL CLASSIFICATION	PID FIELD SCREEN (PPM)	DEPTH (FEET)	NOTE
16					Hole in rock created with a 7 7/8-inch roller bit.			
18								
20								
22								
24								
26					End of Boring @ 26´			
28								
30								
32								

WATER LEVEL DATA				DEPTH (FT)			NOTES:
DATE	TIME		ELAPSED TIME	BOTTOM OF CASING	BOTTOM OF BORING	GROUNDWATER ENCOUNTERED	No coring of rock; hole in rock created to 26´ with a 7 7/8-inch roller bit. Driller reports losing 50 to 80 gallons of water during reaming of rock hole. Driller reports most drilling water lost in deeper rock (>15´).
				16.7	26	yes	

GENERAL NOTES

1) STRATIFICATION LINES REPRESENT APPROXIMATE BOUNDARY BETWEEN SOIL TYPES, TRANSITIONS MAY BE GRADUAL.
2) WATER LEVEL READINGS HAVE BEEN MADE AT TIMES AND UNDER CONDITIONS STATED, FLUCTUATIONS OF GROUNDWATER

and = 35 to 50 %
some = 20 to 35%
little = 10 to 20%
trace = 1 to 10%
c - coarse
m = medium
f = fine
ND = Non Detect
BGS = Below the Ground Surface
NA = Not Applicable

LABELLA Associates, P.C.
300 STATE STREET, ROCHESTER, NY
(585) 454-6110

BORING LOG
Remedial Measures NYSDEC BCP Site #C828159
690 St. Paul Street
Rochester, New York
Well Installations

BORING: **TW-4**
SHEET 1 OF 2
JOB: **209280**
CHKD BY:

CONTRACTOR: NYEG
DRILLER: H. Lyons
LABELLA REPRESENTATIVE: DJK & KR Miller
BORING LOCATION: INTERIOR, TO NORTH OF ALLEY/LOADING DOCK AREA
TYPE OF WELL: TREATMENT WELL
GROUND SURFACE ELEVATION: DATUM:
START DATE: 8/6/2015 END DATE: 8/11/2015

TYPE OF DRILL RIG: CME 45B SKID-MTD.
AUGER SIZE AND TYPE: 8.25-INCH HOLLOW STEM
OVERBURDEN SAMPLING METHOD: 2-INCH SPLIT SPOON
DRIVE SAMPLER TYPE: SPLIT SPOON
INSIDE DIAMETER:
ROCK CORE BARREL: NX

DEPTH (FEET)	SAMPLE RECOVERY	RQD Value (%)	SAMPLE NO. AND DEPTH (FEET)	STRATA CHANGE (FEET)	VISUAL CLASSIFICATION	PID FIELD SCREEN (PPM)	DEPTH (FEET)	NOTE
0					Remove 6"-7" thick concrete floor slab with core drill.			
					Clean crushed stone, wet (fill). Some white, weak material from 1.5´ to 1.7´. This material is rusted, easily breakable, and slimy when rubbed together, like putty or glue (fill).	0.1		
2	Hand Auger to 4´			1.7				
					Some large rocks/boulders, gravel mix of subangular/subrounded rocks, fine to coarse, some sand. Wet at 4´.	0.1		
4								
	0	N/A	S-1 4 - 6		No recovery, wet.			
6	0.1		S-2 6 - 7		Poor recovery	0.1		
			S-3 7 - 8		Silty brown soils, wet, oily odor.	1.8		Soil sample collected 7´ - 8´
8					Apparent competent bedrock @ 8´. Set steel casing @ 8´.			
10								
12					Hole in rock created with a 7 7/8-inch roller bit.			
14								
16								

WATER LEVEL DATA				DEPTH (FT)			NOTES:
DATE	TIME		ELAPSED TIME	BOTTOM OF CASING	BOTTOM OF BORING	GROUNDWATER ENCOUNTERED	Set 8-inch diameter steel casing 8´. No coring of rock; hole in rock created to 20´ with a 7 7/8-inch roller bit. Driller reports losing ±25 gallons of water during reaming of rock hole; most water apparently lost between 9´ and 11´ BFF. Driller observes fast recharge of groundwater and northwest groundwater flow in fracture at 15´.
				8	20	4	

GENERAL NOTES

1) STRATIFICATION LINES REPRESENT APPROXIMATE BOUNDARY BETWEEN SOIL TYPES, TRANSITIONS MAY BE GRADUAL.
2) WATER LEVEL READINGS HAVE BEEN MADE AT TIMES AND UNDER CONDITIONS STATED, FLUCTUATIONS OF GROUNDWATER

and = 35 to 50 %
some = 20 to 35%
little = 10 to 20%
trace = 1 to 10%
c - coarse
m = medium
f = fine
ND = Non Detect
BGS = Below the Ground Surface
NA = Not Applicable

LABELLA Associates, P.C.

300 STATE STREET, ROCHESTER, NY
(585) 454-6110

BORING LOG
Remedial Measures NYSDEC BCP Site #C828159
690 St. Paul Street
Rochester, New York
Well Installations

BORING: **TW-4**
SHEET 2 OF 2
JOB: **209280**
CHKD BY:

CONTRACTOR: NYEG
DRILLER: H. Lyons
LABELLA REPRESENTATIVE: DJK & KR Miller

BORING LOCATION: INTERIOR, TO NORTH OF ALLEY/LOADING DOCK AREA
TYPE OF WELL: TREATMENT WELL
GROUND SURFACE ELEVATION: DATUM:
START DATE: 8/6/2015 END DATE: 8/11/2015

TYPE OF DRILL RIG: CME 45B SKID-MTD.
AUGER SIZE AND TYPE: 8.25-INCH HOLLOW STEM
OVERBURDEN SAMPLING METHOD: 2-INCH SPLIT SPOON

DRIVE SAMPLER TYPE: SPLIT SPOON
INSIDE DIAMETER:
ROCK CORE BARREL: NX

DEPTH (FEET)	SAMPLE				VISUAL CLASSIFICATION	PID FIELD SCREEN (PPM)	DEPTH (FEET)	NOTE
	SAMPLE RECOVERY	RQD Value (%)	SAMPLE NO. AND DEPTH (FEET)	STRATA CHANGE (FEET)				
16					Hole in rock created with a 7 7/8-inch roller bit.			
18								
20								
					End of Boring @ 20´.			
22								
24								
26								
28								
30								
32								

WATER LEVEL DATA				DEPTH (FT)			NOTES:
DATE	TIME		ELAPSED TIME	BOTTOM OF CASING	BOTTOM OF BORING	GROUNDWATER ENCOUNTERED	Set 8-inch diameter steel casing 8´. No coring of rock; hole in rock created to 20´ with a 7 7/8-inch roller bit. Driller reports losing ±25 gallons of water during reaming of rock hole; most water apparently lost between 9´ and 11´ BFF. Driller observes fast recharge of groundwater and northwest groundwater flow in fracture at 15´.
				8	20	4	

GENERAL NOTES

1) STRATIFICATION LINES REPRESENT APPROXIMATE BOUNDARY BETWEEN SOIL TYPES, TRANSITIONS MAY BE GRADUAL.
2) WATER LEVEL READINGS HAVE BEEN MADE AT TIMES AND UNDER CONDITIONS STATED, FLUCTUATIONS OF GROUNDWATER

and = 35 to 50 %
some = 20 to 35%
little = 10 to 20%
trace = 1 to 10%
c - coarse
m = medium
f = fine
ND = Non Detect
BGS = Below the Ground Surface
NA = Not Applicable

LABELLA Associates, P.C.
300 STATE STREET, ROCHESTER, NY
(585) 454-6110

BORING LOG
Remedial Measures NYSDEC BCP Site #C828159
690 St. Paul Street
Rochester, New York
Well Installations

BORING: **TW-5**
SHEET 1 OF 2
JOB: **209280**
CHKD BY:

CONTRACTOR: NYEG
DRILLER: Joel
LABELLA REPRESENTATIVE: KR Miller

BORING LOCATION: EXTERIOR SIDEWALK ENTRANCE AREA, SOUTHERNMOST OF 3 TREATMENT WELLS HERE.
TYPE OF WELL: TREATMENT WELL
GROUND SURFACE ELEVATION: DATUM:
START DATE: 7/21/2015 END DATE: 7/24/2015

TYPE OF DRILL RIG: CME TRUCK-MTD.
AUGER SIZE AND TYPE: 8.25-INCH HOLLOW STEM
OVERBURDEN SAMPLING METHOD: 2-INCH SPLIT SPOON

DRIVE SAMPLER TYPE: SPLIT SPOON
INSIDE DIAMETER:
OTHER:

DEPTH (FEET)	SAMPLE RECOVERY	RQD Value (%)	SAMPLE NO. AND DEPTH (FEET)	STRATA CHANGE (FEET)	VISUAL CLASSIFICATION	PID FIELD SCREEN (PPM)	DEPTH (FEET)	NOTE
0			S-1		Remove concrete sidewalk with core drill.			
	<0.5	N/A	1 - 2		Poor recovery. Grayish-brown f/c Sand and c Gravel (concrete sub-base).	0.1		
2								
	1.5	N/A	S-2 2 - 4		Grayish-brown f/c Sand and f Gravel, moist	0.1 0.2		
4								
	1	N/A	S-3 4 - 5.5		Brownish-gray f/c Gravel with c Sand and broken, weathered Dolostone	0.1 0.0		
					Split spoon refusal @ 5.5´			
6					Auger refusal @ 6´			
					Apparent competent bedrock @ 6´. Set steel casing @ 6´.			
8								
10					Hole in rock created with a 7 7/8-inch roller bit.			
12								
14								
16								

WATER LEVEL DATA				DEPTH (FT)			NOTES:
DATE	TIME		ELAPSED TIME	BOTTOM OF CASING	BOTTOM OF BORING	GROUNDWATER ENCOUNTERED	Set 8-inch diameter steel casing 6´ below grade. No coring of rock; hole in rock created to 20´ with a 7 7/8-inch roller bit. Driller reports losing ±20-30 gallons of water during reaming of rock hole.
				6	20	No	

GENERAL NOTES

1) STRATIFICATION LINES REPRESENT APPROXIMATE BOUNDARY BETWEEN SOIL TYPES, TRANSITIONS MAY BE GRADUAL.
2) WATER LEVEL READINGS HAVE BEEN MADE AT TIMES AND UNDER CONDITIONS STATED, FLUCTUATIONS OF GROUNDWATER

and = 35 to 50 %
some = 20 to 35%
little = 10 to 20%
trace = 1 to 10%
c - coarse
m = medium
f = fine
ND = Non Detect
BGS = Below the Ground Surface
NA = Not Applicable

LABELLA Associates, P.C.
300 STATE STREET, ROCHESTER, NY
(585) 454-6110

BORING LOG
Remedial Measures NYSDEC BCP Site #C828159
690 St. Paul Street
Rochester, New York
Well Installations

BORING: **TW-5**
SHEET 2 OF 2
JOB: **209280**
CHKD BY:

CONTRACTOR: NYEG
DRILLER: Joel
LABELLA REPRESENTATIVE: KR Miller

BORING LOCATION: EXTERIOR SIDEWALK ENTRANCE AREA, SOUTHERNMOST OF 3 TREATMENT WELLS HERE.
TYPE OF WELL: TREATMENT WELL
GROUND SURFACE ELEVATION: DATUM:
START DATE: 7/21/2015 END DATE: 7/24/2015

TYPE OF DRILL RIG: CME TRUCK-MTD.
AUGER SIZE AND TYPE: 8.25-INCH HOLLOW STEM
OVERBURDEN SAMPLING METHOD: 2-INCH SPLIT SPOON

DRIVE SAMPLER TYPE: SPLIT SPOON
INSIDE DIAMETER:
OTHER:

DEPTH (FEET)	SAMPLE RECOVERY	RQD Value (%)	SAMPLE NO. AND DEPTH (FEET)	STRATA CHANGE (FEET)	VISUAL CLASSIFICATION	PID FIELD SCREEN (PPM)	DEPTH (FEET)	NOTE
16					Hole in rock created with a 7 7/8-inch roller bit.			
18								
20					End of Boring @ 20´.			
22								
24								
26								
28								
30								
32								

WATER LEVEL DATA				DEPTH (FT)			NOTES:
DATE	TIME		ELAPSED TIME	BOTTOM OF CASING	BOTTOM OF BORING	GROUNDWATER ENCOUNTERED	Set 8-inch diameter steel casing 6´ below grade. No coring of rock; hole in rock created to 20´ with a 7 7/8-inch roller bit. Driller reports losing ±20-30 gallons of water during reaming of rock hole.
				6	20	4	

GENERAL NOTES

1) STRATIFICATION LINES REPRESENT APPROXIMATE BOUNDARY BETWEEN SOIL TYPES, TRANSITIONS MAY BE GRADUAL.
2) WATER LEVEL READINGS HAVE BEEN MADE AT TIMES AND UNDER CONDITIONS STATED, FLUCTUATIONS OF GROUNDWATER

and = 35 to 50 %
some = 20 to 35%
little = 10 to 20%
trace = 1 to 10%
c - coarse
m = medium
f = fine
ND = Non Detect
BGS = Below the Ground Surface
NA = Not Applicable

LABELLA Associates, P.C.

300 STATE STREET, ROCHESTER, NY
(585) 454-6110

BORING LOG
Remedial Measures NYSDEC BCP Site #C828159
690 St. Paul Street
Rochester, New York
Well Installations

BORING: **TW-6**
SHEET 1 OF 1
JOB: **209280**
CHKD BY:

CONTRACTOR: NYEG
DRILLER: Joel
LABELLA REPRESENTATIVE: KR Miller

BORING LOCATION: EXTERIOR SIDEWALK ENTRANCE AREA, MIDDLE OF 3 TREATMENT WELLS HERE.
TYPE OF WELL: TREATMENT WELL
GROUND SURFACE ELEVATION: DATUM:
START DATE: 7/21/2015 END DATE: 7/23/2015

TYPE OF DRILL RIG: CME TRUCK-MTD.
AUGER SIZE AND TYPE: 8.25-INCH HOLLOW STEM
OVERBURDEN SAMPLING METHOD: 2-INCH SPLIT SPOON

DRIVE SAMPLER TYPE: SPLIT SPOON
INSIDE DIAMETER:
OTHER:

DEPTH (FEET)	SAMPLE RECOVERY	RQD Value (%)	SAMPLE NO. AND DEPTH (FEET)	STRATA CHANGE (FEET)	VISUAL CLASSIFICATION	PID FIELD SCREEN (PPM)	DEPTH (FEET)	NOTE
0			S-1		Remove concrete sidewalk with core drill.			
	1	N/A	0.5 - 2		Brown Clay and Silt with f/c Gravel and c Sand (fill).	0.2		
2	1	N/A	S-2 2 - 3		Split spoon refusal @ 3´ (concrete?). Dark grayish-brown f/c Sand and c/ f Gravel (fill).	0.1		
4	0.5	N/A	S-3 3 - 5		Concrete rubble atop moist, broken, weathered Dolostone and f Gravel with Silt.	0.1		
			S-4, 5 - 5.5		Wet Silty f Gravel with c Sand, trace c Gravel, broken rock.	0.1		
					Split spoon refusal @ 5.5´.			
6					Auger refusal @ 6´			
					Apparent competent bedrock @ 6´. Set steel casing @ 6´.			
8								
10								
					Hole in rock created with a 7 7/8-inch roller bit.			
12								
14								
16								

WATER LEVEL DATA				DEPTH (FT)			NOTES:
DATE	TIME		ELAPSED TIME	BOTTOM OF CASING	BOTTOM OF BORING	GROUNDWATER ENCOUNTERED	Set 8-inch diameter steel casing 6´ below grade. No coring of rock; hole in rock created with a 7 7/8-inch roller bit. Driller reports losing ±20-30 gallons of water during reaming of rock hole.
				6	20	No	

GENERAL NOTES

1) STRATIFICATION LINES REPRESENT APPROXIMATE BOUNDARY BETWEEN SOIL TYPES, TRANSITIONS MAY BE GRADUAL.
2) WATER LEVEL READINGS HAVE BEEN MADE AT TIMES AND UNDER CONDITIONS STATED, FLUCTUATIONS OF GROUNDWATER

and = 35 to 50 %
some = 20 to 35%
little = 10 to 20%
trace = 1 to 10%
c - coarse
m = medium
f = fine
ND = Non Detect
BGS = Below the Ground Surface
NA = Not Applicable

LABELLA Associates, P.C.

300 STATE STREET, ROCHESTER, NY
(585) 454-6110

BORING LOG
Remedial Measures NYSDEC BCP Site #C828159
690 St. Paul Street
Rochester, New York
Well Installations

BORING: **TW-6**
SHEET 2 OF 2
JOB: **209280**
CHKD BY:

CONTRACTOR: NYEG
DRILLER: Joel
LABELLA REPRESENTATIVE: KR Miller

BORING LOCATION: EXTERIOR SIDEWALK ENTRANCE AREA, MIDDLE OF 3 TREATMENT WELLS HERE.
TYPE OF WELL: TREATMENT WELL
GROUND SURFACE ELEVATION: DATUM:
START DATE: 7/21/2015 END DATE: 7/23/2015

TYPE OF DRILL RIG: CME TRUCK-MTD.
AUGER SIZE AND TYPE: 8.25-INCH HOLLOW STEM
OVERBURDEN SAMPLING METHOD: 2-INCH SPLIT SPOON

DRIVE SAMPLER TYPE: SPLIT SPOON
INSIDE DIAMETER:
OTHER:

DEPTH (FEET)	SAMPLE RECOVERY	RQD Value (%)	SAMPLE NO. AND DEPTH (FEET)	STRATA CHANGE (FEET)	VISUAL CLASSIFICATION	PID FIELD SCREEN (PPM)	DEPTH (FEET)	NOTE
16					Hole in rock created with a 7 7/8-inch roller bit.			
18								
20					End of Boring @ 20´.			
22								
24								
26								
28								
30								
32								

WATER LEVEL DATA				DEPTH (FT)			NOTES:
DATE	TIME		ELAPSED TIME	BOTTOM OF CASING	BOTTOM OF BORING	GROUNDWATER ENCOUNTERED	Set 8-inch diameter steel casing 6´ below grade. No coring of rock; hole in rock created with a 7 7/8-inch roller bit. Driller reports losing ±20-30 gallons of water during reaming of rock hole.
				6	20	No	

GENERAL NOTES

1) STRATIFICATION LINES REPRESENT APPROXIMATE BOUNDARY BETWEEN SOIL TYPES, TRANSITIONS MAY BE GRADUAL.
2) WATER LEVEL READINGS HAVE BEEN MADE AT TIMES AND UNDER CONDITIONS STATED, FLUCTUATIONS OF GROUNDWATER

and = 35 to 50 %
some = 20 to 35%
little = 10 to 20%
trace = 1 to 10%
c - coarse
m = medium
f = fine
ND = Non Detect
BGS = Below the Ground Surface
NA = Not Applicable

LABELLA Associates, P.C.

300 STATE STREET, ROCHESTER, NY
(585) 454-6110

BORING LOG
Remedial Measures NYSDEC BCP Site #C828159
690 St. Paul Street
Rochester, New York
Well Installations

BORING: **TW-7**
SHEET 1 OF 2
JOB: **209280**
CHKD BY:

CONTRACTOR: NYEG
DRILLER: Joel
LABELLA REPRESENTATIVE: DJK

BORING LOCATION: EXTERIOR SIDEWALK ENTRANCE AREA, NORTHERN OF 3 TREATMENT WELLS HERE.
TYPE OF WELL: TREATMENT WELL
GROUND SURFACE ELEVATION: DATUM:
START DATE: 7/21/2015 END DATE: 7/23/2015

TYPE OF DRILL RIG: CME TRUCK-MTD.
AUGER SIZE AND TYPE: 8.25-INCH HOLLOW STEM
OVERBURDEN SAMPLING METHOD: 2-INCH SPLIT SPOON

DRIVE SAMPLER TYPE: SPLIT SPOON
INSIDE DIAMETER:
ROCK CORE BARREL: NX

DEPTH (FEET)	SAMPLE RECOVERY	RQD Value (%)	SAMPLE NO. AND DEPTH (FEET)	STRATA CHANGE (FEET)	VISUAL CLASSIFICATION	PID FIELD SCREEN (PPM)	DEPTH (FEET)	NOTE
0	<0.5´	N/A	S-1 0.5 - 2		Remove concrete sidewalk with core drill. Poor recovery. f/c Gravel	0.2		
2	1.5´	N/A	S-2 2 - 3		Brown and gray f/c Gravel, c Sand, trace Silt/Clay (fill)	0.2		
4	1.2´	N/A	S-3 3 - 5.5		Similar to above, but less c Gravel and more Silt/Clay	0.2		
6					Split spoon refusal @ 5.5´. Auger refusal @ 6´. Apparent competent bedrock @ 6´. Set steel casing @ 6´.			
8	100%	9	Run 1 6´ - 10´		Medium to dark gray, fine-grained, non-fossiliferous Dolostone that is highly to moderately fractured. Fractures are mostly horizontal, but some low-angle and vertical fractures are present. Secondary crystallization is in some horizontal and low angle fractures (rare). Larger horizontal and low angle fractures contain silt and highly weathered rock, which presents as fine gravel. Rubble 6´-6.33´. Vertical fractures in rock core from 6.5´ to 6.6´ and 6.6´	29	8.5´	Soil sample collected @ 8.5´
10	100%	20	Run 2 10´ - 15´		Horizontal Fractures in rock core: 6.33´; 6.5´; 6.75´; 6.83´; 6.92´; 7.08´;7.25´; 7.42´; 7.75´; 7.83´; 8.25´; 8.42´; 8.75´; 8.83´; 9.1´; 9.33´; 9.5´; 9.6´; 9.9´. Rock core appears similar to above. Horizontal Fractures in rock core: 10.25´; 10,33´; 10.42´; 10.55´; 10.7´; 11´; 11.5´; 11.66´; 11.9´; 12.1´; rubble @ 12.2´; 12.33´; 12.5´; 12.66´; 12.75´; 12.8´; 13.2´; 13.75´; 14´; 14.25´; 14.4´; 15´. Staining observed from 12.2´ to 12.6´.			
12								
14								Soil sample collected @ 14´
16								

WATER LEVEL DATA				BOTTOM OF CASING	BOTTOM OF BORING	GROUNDWATER ENCOUNTERED
DATE	TIME		ELAPSED TIME	DEPTH (FT)		
				8	20	yes

NOTES:
Set 8-inch diameter steel casing 6´ below grade. After coring rock, hole in rock created with a 7 7/8-inch roller bit. Driller reports losing ±20-30 gallons of water during coring and reaming of rock hole.

GENERAL NOTES

1) STRATIFICATION LINES REPRESENT APPROXIMATE BOUNDARY BETWEEN SOIL TYPES, TRANSITIONS MAY BE GRADUAL.
2) WATER LEVEL READINGS HAVE BEEN MADE AT TIMES AND UNDER CONDITIONS STATED, FLUCTUATIONS OF GROUNDWATER

and = 35 to 50 %
some = 20 to 35%
little = 10 to 20%
trace = 1 to 10%
c - coarse
m = medium
f = fine
ND = Non Detect
BGS = Below the Ground Surface
NA = Not Applicable

LABELLA Associates, P.C.
300 STATE STREET, ROCHESTER, NY
(585) 454-6110

BORING LOG
Remedial Measures NYSDEC BCP Site #C828159
690 St. Paul Street
Rochester, New York
Well Installations

BORING: **TW-7**
SHEET 2 OF 2
JOB: **209280**
CHKD BY:

CONTRACTOR: NYEG
DRILLER: Joel
LABELLA REPRESENTATIVE: DJK

BORING LOCATION: EXTERIOR SIDEWALK ENTRANCE AREA, NORTHERN OF 3 TREATMENT WELLS HERE.
TYPE OF WELL: TREATMENT WELL
GROUND SURFACE ELEVATION: DATUM:
START DATE: 7/21/2015 END DATE: 7/23/2015

TYPE OF DRILL RIG: CME TRUCK-MTD.
AUGER SIZE AND TYPE: 8.25-INCH HOLLOW STEM
OVERBURDEN SAMPLING METHOD: 2-INCH SPLIT SPOON

DRIVE SAMPLER TYPE: SPLIT SPOON
INSIDE DIAMETER:
OTHER:

DEPTH (FEET)	SAMPLE RECOVERY	RQD Value (%)	SAMPLE NO. AND DEPTH (FEET)	STRATA CHANGE (FEET)	VISUAL CLASSIFICATION	PID FIELD SCREEN (PPM)	DEPTH (FEET)	NOTE
16	100%	50	Run 3 15´ - 20´		Rock core appears similar to above. Horizontal Fractures in rock core: 15´; 15.3´; 15.35´; 15.4´; 15.5´; 15.66´; 15.8´; 16´; 16.6´; 16.75´; 16.9´; 17.25´; 17.5´; 17.75´; 18.4´; 19´; 19.2´; 19.6´; 19.75´; 20´.			
18								
20					End of Boring @ 20´			
22								
24								
26								
28								
30								
32								

WATER LEVEL DATA				DEPTH (FT)			NOTES:
DATE	TIME		ELAPSED TIME	BOTTOM OF CASING	BOTTOM OF BORING	GROUNDWATER ENCOUNTERED	Set 8-inch diameter steel casing 6´ below grade. After coring rock, hole in rock created with a 7 7/8-inch roller bit. Driller reports losing ±20-30 gallons of water during coring and reaming of rock hole.
				8	20	yes	

GENERAL NOTES

1) STRATIFICATION LINES REPRESENT APPROXIMATE BOUNDARY BETWEEN SOIL TYPES, TRANSITIONS MAY BE GRADUAL.
2) WATER LEVEL READINGS HAVE BEEN MADE AT TIMES AND UNDER CONDITIONS STATED, FLUCTUATIONS OF GROUNDWATER

and = 35 to 50 %
some = 20 to 35%
little = 10 to 20%
trace = 1 to 10%
c - coarse
m = medium
f = fine
ND = Non Detect
BGS = Below the Ground Surface
NA = Not Applicable

LABELLA Associates, P.C.

300 STATE STREET, ROCHESTER, NY
(585) 454-6110

BORING LOG
Remedial Measures NYSDEC BCP Site #C828159
690 St. Paul Street
Rochester, New York
Well Installations

BORING: **TW-8**
SHEET 1 OF 2
JOB: **209280**
CHKD BY:

CONTRACTOR: NYEG
DRILLER: H. Lyons
LABELLA REPRESENTATIVE: KR Miller

BORING LOCATION: INTERIOR
TYPE OF WELL: TREATMENT WELL
GROUND SURFACE ELEVATION: DATUM:
START DATE: 7/21/2015 END DATE: 7/24/2015

TYPE OF DRILL RIG: CME 45B SKID-MTD.
AUGER SIZE AND TYPE: 8.25-INCH HOLLOW STEM
OVERBURDEN SAMPLING METHOD: 2-INCH SPLIT SPOON

DRIVE SAMPLER TYPE: SPLIT SPOON
INSIDE DIAMETER:
ROCK CORE BARREL: NX

DEPTH (FEET)	SAMPLE RECOVERY	RQD Value (%)	SAMPLE NO. AND DEPTH (FEET)	STRATA CHANGE (FEET)	VISUAL CLASSIFICATION	PID FIELD SCREEN (PPM)	DEPTH (FEET)	NOTE
0					Remove ±6" thick concrete floor slab with core drill.			
					Hand auger refusal at 3.5´.			
2	Hand Auger to 3.5´							
4	87.5%	0	Run 1 3.5´ - 5.5´		Horizontal Fractures in rock core: 3.66´;4.1´; 4.15´; 4.4´; 4.45´; 4.5´;4.6´; 4.75´-4.9´; 5´-5.1´; 5.3´. Vertical Fracture in rock core from 3.66´ to 4´. Low-angle Fracture in rock core from 4.15´ to 4.3´.			Driller reports losing some coring water at 5´.
6	93%	8	Run 2 5.5´ - 10.5´		Apparent competent bedrock @ 5.5´. Set steel casing @ 5.5´. Medium to dark gray, fine-grained, non-fossiliferous Dolostone that is highly to moderately fractured. Fractures are mostly horizontal, but some low-angle and vertical fractures are present. Secondary crystallization is in some horizontal and low angle fractures (rare). Larger horizontal and low angle fractures contain silt and highly weathered rock, which presents as fine gravel. Secondary crystallization in some pits and vugs, which are rare.	8.7	7.2	
8					Rubble 5.5´ to 5.85´. Horizontal Fractures in rock core: 5.85´; 6.15´; 6.3´; 6.35´; 6.45´; 6.6´; 7.0´; 7.1´; 7.2´; 7.35´; 7.55´; 7.6´; 7.7´; 7.8´. Rubble 7.9´ to 8.3´.	26	9.1	
10					Horizontal Fractures in rock core: 8.5´; 8.8´; 9.0´; 9.1´; 9.2´; 9.35´; 9.55´; 9.75´; 9.9´; 10.2´.	75	9.9	
12	100%	26	Run 3 10.5´ - 15.5´		Rock appears similar to above. Two (2) Vertical Fractures in rock core from 10.5´ to 10.8´. Horizontal Fractures in rock core: 10.8´; 10.95´; 11´; 11.1´; 11.2´; 11.4´; 11.55´; 11.65´; 11.9´; 12.1´; 12.3´; 12.5´; 12.65´; 12.7´; 12.95´ to 13.1´; 13.2´; 13.4´; 13.6´; 13.8´; 14.0´; 14.3´; 14.4´; 14.55´; 14.8´; 15.2´; 15.5´.	4.6	12.5	Driller reports probable highly fractured zone from 13´ to 13.5´; roller bit drops in this interval.
14								
16								

WATER LEVEL DATA				DEPTH (FT) BOTTOM OF CASING	DEPTH (FT) BOTTOM OF BORING	DEPTH (FT) GROUNDWATER ENCOUNTERED
DATE	TIME		ELAPSED TIME			
				5.5	20	4

NOTES:
Set 8-inch diameter steel casing 5.5´ below grade. After coring rock, hole in rock created with a 7 7/8-inch roller bit. Driller reports losing ±40 gallons of water during coring and reaming of rock hole.

GENERAL NOTES

1) STRATIFICATION LINES REPRESENT APPROXIMATE BOUNDARY BETWEEN SOIL TYPES, TRANSITIONS MAY BE GRADUAL.
2) WATER LEVEL READINGS HAVE BEEN MADE AT TIMES AND UNDER CONDITIONS STATED, FLUCTUATIONS OF GROUNDWATER

and = 35 to 50 %
some = 20 to 35%
little = 10 to 20%
trace = 1 to 10%
c - coarse
m = medium
f = fine
ND = Non Detect
BGS = Below the Ground Surface
NA = Not Applicable

LABELLA Associates, P.C.
300 STATE STREET, ROCHESTER, NY
(585) 454-6110

BORING LOG
Remedial Measures NYSDEC BCP Site #C828159
690 St. Paul Street
Rochester, New York
Well Installations

BORING: **TW-8**
SHEET 2 OF 2
JOB: **209280**
CHKD BY:

CONTRACTOR: NYEG
DRILLER: H. Lyons
LABELLA REPRESENTATIVE: KR Miller

BORING LOCATION: INTERIOR
TYPE OF WELL: TREATMENT WELL
GROUND SURFACE ELEVATION: DATUM:
START DATE: 7/21/2015 END DATE: 7/24/2015

TYPE OF DRILL RIG: CME 45B SKID-MTD.
AUGER SIZE AND TYPE: 8.25-INCH HOLLOW STEM
OVERBURDEN SAMPLING METHOD: 2-INCH SPLIT SPOON

DRIVE SAMPLER TYPE: SPLIT SPOON
INSIDE DIAMETER:
ROCK CORE BARREL: NX

DEPTH (FEET)	SAMPLE RECOVERY	RQD Value (%)	SAMPLE NO. AND DEPTH (FEET)	STRATA CHANGE (FEET)	VISUAL CLASSIFICATION	PID FIELD SCREEN (PPM)	DEPTH (FEET)	NOTE
16	100%	59	Run 4 15.5´ - 20´		Rock core appears similar to above. Horizontal Fractures in rock core: 15.55´; 15.8´; 16´; 16.1´; 16.2´; 16.45´; 16.75´; 16.95´; 17.2´; 17.7´; 17.85´; 18´; 18.4´; 19.0´; 19.4´; 20´.			
18								
20					End of Boring @ 20´			
22								
24								
26								
28								
30								
32								

WATER LEVEL DATA				DEPTH (FT)			NOTES:
DATE	TIME		ELAPSED TIME	BOTTOM OF CASING	BOTTOM OF BORING	GROUNDWATER ENCOUNTERED	Set 8-inch diameter steel casing 5.5´ below grade. After coring rock, hole in rock created with 7 7/8-inch roller bit. Driller reports losing ±40 gallons of water during coring and reaming of rock hole.
				5.5	20	yes	

GENERAL NOTES

1) STRATIFICATION LINES REPRESENT APPROXIMATE BOUNDARY BETWEEN SOIL TYPES, TRANSITIONS MAY BE GRADUAL.
2) WATER LEVEL READINGS HAVE BEEN MADE AT TIMES AND UNDER CONDITIONS STATED, FLUCTUATIONS OF GROUNDWATER

and = 35 to 50 %
some = 20 to 35%
little = 10 to 20%
trace = 1 to 10%
c - coarse
m = medium
f = fine
ND = Non Detect
BGS = Below the Ground Surface
NA = Not Applicable

LABELLA Associates, P.C.
300 STATE STREET, ROCHESTER, NY
(585) 454-6110

BORING LOG
Remedial Measures NYSDEC BCP Site #C828159
690 St. Paul Street
Rochester, New York
Well Installations

BORING: **TW-9**
SHEET 1 OF 1
JOB: **209280**
CHKD BY:

CONTRACTOR: NYEG
DRILLER: H. Lyons
LABELLA REPRESENTATIVE: KR Miller

BORING LOCATION: INTERIOR, SOUTHERNMOST OF INTERIOR TREATMENT WELLS
TYPE OF WELL: TREATMENT WELL
GROUND SURFACE ELEVATION: DATUM:
START DATE: 7/24/2015 END DATE: 7/27/2015

TYPE OF DRILL RIG: CME 45B SKID-MTD.
AUGER SIZE AND TYPE: 8.25-INCH HOLLOW STEM
OVERBURDEN SAMPLING METHOD: 2-INCH SPLIT SPOON

DRIVE SAMPLER TYPE: SPLIT SPOON
INSIDE DIAMETER:
ROCK CORE BARREL: NX

DEPTH (FEET)	SAMPLE				VISUAL CLASSIFICATION	PID FIELD SCREEN (PPM)	DEPTH (FEET)	NOTE
	SAMPLE RECOVERY	RQD Value (%)	SAMPLE NO. AND DEPTH (FEET)	STRATA CHANGE (FEET)				
0					Remove ±8" thick concrete floor slab with core drill. Hand auger refusal at 1´; two (2) 4-inch cast iron pipes found at this depth, running parallel to each other in an east/west orientation. Further investigation suggests that these pipes are likely associated with a larger bank of pipes that appear to extend to the east and outside the footprint of the building. Will adjust this boring location approx. 1 foot to the south (see boring TW-9A).			
2								
4								
6								
8								
10								
12								
14								
16								

NOTES:

WATER LEVEL DATA				DEPTH (FT)		
DATE	TIME		ELAPSED TIME	BOTTOM OF CASING	BOTTOM OF BORING	GROUNDWATER ENCOUNTERED
				N/A	1	no

GENERAL NOTES

1) STRATIFICATION LINES REPRESENT APPROXIMATE BOUNDARY BETWEEN SOIL TYPES, TRANSITIONS MAY BE GRADUAL.
2) WATER LEVEL READINGS HAVE BEEN MADE AT TIMES AND UNDER CONDITIONS STATED, FLUCTUATIONS OF GROUNDWATER

and = 35 to 50 %
some = 20 to 35%
little = 10 to 20%
trace = 1 to 10%
c - coarse
m = medium
f = fine
ND = Non Detect
BGS = Below the Ground Surface
NA = Not Applicable

LABELLA Associates, P.C.
300 STATE STREET, ROCHESTER, NY
(585) 454-6110

BORING LOG
Remedial Measures NYSDEC BCP Site #C828159
690 St. Paul Street
Rochester, New York
Well Installations

BORING: **TW-9A**
SHEET 1 OF 2
JOB: **209280**
CHKD BY:

CONTRACTOR: NYEG
DRILLER: H. Lyons
LABELLA REPRESENTATIVE: S. Rife & KR Miller

BORING LOCATION: INTERIOR, SOUTHERNMOST OF INTERIOR TREATMENT WELLS
TYPE OF WELL: TREATMENT WELL
GROUND SURFACE ELEVATION: DATUM:
START DATE: 7/27/2015 END DATE: 7/31/2015

TYPE OF DRILL RIG: CME 45B SKID-MTD.
AUGER SIZE AND TYPE: 8.25-INCH HOLLOW STEM
OVERBURDEN SAMPLING METHOD: 2-INCH SPLIT SPOON

DRIVE SAMPLER TYPE: SPLIT SPOON
INSIDE DIAMETER:
ROCK CORE BARREL: NX

DEPTH (FEET)	SAMPLE RECOVERY	RQD Value (%)	SAMPLE NO. AND DEPTH (FEET)	STRATA CHANGE (FEET)	VISUAL CLASSIFICATION	PID FIELD SCREEN (PPM)	DEPTH (FEET)	NOTE
0					Remove 4"-5" thick concrete floor slab with core drill.			
					Hand clear from 0.5´ to 3´. Large cobbles and Silty c Sand and c Gravel.			
2								
		0	Run 1					
4			3.5´ - 6.0´		Fractured Dolostone, occasional vugs, vertical fractures, mud seams (2 noted), no odors.			
6					Apparent competent bedrock @ 6.0´. Set steel casing @ 6.0´.			
		0	Run 2					
8			6´ - 11´		Highly Fractured Dolostone, frequent angled and vertical fractures. Mud seams noted @ 9´, 9.7´, and 10´. Petroleum odors reported by Driller at 7´ to 8´.			
10								
12	100%		Run 3					
			11´ - 16´					
14								
16								

WATER LEVEL DATA				DEPTH (FT) BOTTOM OF CASING	DEPTH (FT) BOTTOM OF BORING	GROUNDWATER ENCOUNTERED
DATE	TIME		ELAPSED TIME			
				6	20	yes

NOTES:
Set 8-inch diameter steel casing 6´ below grade. After coring rock, hole in rock created with a 7 7/8-inch roller bit.

GENERAL NOTES

1) STRATIFICATION LINES REPRESENT APPROXIMATE BOUNDARY BETWEEN SOIL TYPES, TRANSITIONS MAY BE GRADUAL.
2) WATER LEVEL READINGS HAVE BEEN MADE AT TIMES AND UNDER CONDITIONS STATED, FLUCTUATIONS OF GROUNDWATER

and = 35 to 50 %
some = 20 to 35%
little = 10 to 20%
trace = 1 to 10%
c - coarse
m = medium
f = fine
ND = Non Detect
BGS = Below the Ground Surface
NA = Not Applicable

LABELLA Associates, P.C.
300 STATE STREET, ROCHESTER, NY
(585) 454-6110

BORING LOG
Remedial Measures NYSDEC BCP Site #C828159
690 St. Paul Street
Rochester, New York
Well Installations

BORING: **TW-9A**
SHEET 2 OF 2
JOB: **209280**
CHKD BY:

CONTRACTOR: NYEG
DRILLER: H. Lyons
LABELLA REPRESENTATIVE: S. Rife & KR Miller

BORING LOCATION: INTERIOR
TYPE OF WELL: TREATMENT WELL
GROUND SURFACE ELEVATION: DATUM:
START DATE: 7/27/2015 END DATE: 7/31/2015

TYPE OF DRILL RIG: CME 45B SKID-MTD.
AUGER SIZE AND TYPE: 8.25-INCH HOLLOW STEM
OVERBURDEN SAMPLING METHOD: 2-INCH SPLIT SPOON

DRIVE SAMPLER TYPE: SPLIT SPOON
INSIDE DIAMETER:
ROCK CORE BARREL: NX

DEPTH (FEET)	SAMPLE RECOVERY	RQD Value (%)	SAMPLE NO. AND DEPTH (FEET)	STRATA CHANGE (FEET)	VISUAL CLASSIFICATION	PID FIELD SCREEN (PPM)	DEPTH (FEET)	NOTE
16	92.5%	25	Run 4 15.5´ - 20´		Rock core appears similar to above.			
18								
20					End of Boring @ 20´			
22								
24								
26								
28								
30								
32								

WATER LEVEL DATA				DEPTH (FT)			NOTES:
DATE	TIME		ELAPSED TIME	BOTTOM OF CASING	BOTTOM OF BORING	GROUNDWATER ENCOUNTERED	Set 8-inch diameter steel casing 6´ below grade. After coring rock, hole in rock created with a 7 7/8-inch roller bit.
				6	20	yes	

GENERAL NOTES

1) STRATIFICATION LINES REPRESENT APPROXIMATE BOUNDARY BETWEEN SOIL TYPES, TRANSITIONS MAY BE GRADUAL.
2) WATER LEVEL READINGS HAVE BEEN MADE AT TIMES AND UNDER CONDITIONS STATED, FLUCTUATIONS OF GROUNDWATER

and = 35 to 50 %
some = 20 to 35%
little = 10 to 20%
trace = 1 to 10%
c - coarse
m = medium
f = fine
ND = Non Detect
BGS = Below the Ground Surface
NA = Not Applicable

LABELLA Associates, P.C.
300 STATE STREET, ROCHESTER, NY
(585) 454-6110

BORING LOG
Remedial Measures NYSDEC BCP Site #C828159
690 St. Paul Street
Rochester, New York
Well Installations

BORING: **TW-10**
SHEET 1 OF 2
JOB: **209280**
CHKD BY:

CONTRACTOR: NYEG
DRILLER: H. Lyons
LABELLA REPRESENTATIVE: KR Miller
BORING LOCATION: INTERIOR, TO NORTHWEST OF TW-9
TYPE OF WELL: TREATMENT WELL
GROUND SURFACE ELEVATION: DATUM:
START DATE: 7/24/2015 END DATE: 8/25/2015

TYPE OF DRILL RIG: CME 45B SKID-MTD.
AUGER SIZE AND TYPE: 8.25-INCH HOLLOW STEM
OVERBURDEN SAMPLING METHOD: 2-INCH SPLIT SPOON
DRIVE SAMPLER TYPE: SPLIT SPOON
INSIDE DIAMETER:
ROCK CORE BARREL: NX

DEPTH (FEET)	SAMPLE RECOVERY	RQD Value (%)	SAMPLE NO. AND DEPTH (FEET)	STRATA CHANGE (FEET)	VISUAL CLASSIFICATION	PID FIELD SCREEN (PPM)	DEPTH (FEET)	NOTE
0					Remove ±11" thick concrete floor slab with core drill.			
					Hand clear to 1.5´. Cobbles and c Gravel.			
					Hand auger			
2	1.7´	N/A	S-1 1.5´ - 3.5´		Brown Clayey Silt with f Gravel atop brownish-gray f Gravel, wet	0.1		
					Split spoon refusal @ 3.5´			
4	100%	0	Run 1 3.5´ - 5´		Medium gray Dolostone, highly to moderately fractured. Horizontal Fractures in rock core: 3.7´; 3.9´; 4.2´; 4.35´; 4.45´; 4.5´;4.55´; 4.65´; 4.9´. After coring, able to auger to 4´. Use 7 7/8-inch roller bit to reach 5´ and apparent competent rock.	0.0		
					Apparent competent bedrock @ 5´. Set steel casing @ 5´.			
6								
8								
10					Hole in rock created with a 7 7/8-inch roller bit.			
12								
14								
16								

WATER LEVEL DATA				DEPTH (FT)		
DATE	TIME		ELAPSED TIME	BOTTOM OF CASING	BOTTOM OF BORING	GROUNDWATER ENCOUNTERED
				5	20	yes

NOTES: Set 8-inch diameter steel casing 5´ below grade. After coring rock to 5.5´, hole in rock created to 20´ with a 7 7/8-inch roller bit. Broken drill string leaves roller bit at 17´ from 7/29 to 8/25, when it is successfully removed. Driller reports losing ±125 gallons of water during coring and reaming of rock hole. Driller notes petroleum (fuel oil?) odor at ±19´.

GENERAL NOTES

1) STRATIFICATION LINES REPRESENT APPROXIMATE BOUNDARY BETWEEN SOIL TYPES, TRANSITIONS MAY BE GRADUAL.
2) WATER LEVEL READINGS HAVE BEEN MADE AT TIMES AND UNDER CONDITIONS STATED, FLUCTUATIONS OF GROUNDWATER

and = 35 to 50 %
some = 20 to 35%
little = 10 to 20%
trace = 1 to 10%
c - coarse
m = medium
f = fine
ND = Non Detect
BGS = Below the Ground Surface
NA = Not Applicable

LABELLA Associates, P.C.
300 STATE STREET, ROCHESTER, NY
(585) 454-6110

BORING LOG
Remedial Measures NYSDEC BCP Site #C828159
690 St. Paul Street
Rochester, New York
Well Installations

BORING: **TW-10**
SHEET 2 OF 2
JOB: **209280**
CHKD BY:

CONTRACTOR: NYEG
DRILLER: H. Lyons
LABELLA REPRESENTATIVE: KR Miller

BORING LOCATION: INTERIOR, TO NORTHWEST OF TW-9
TYPE OF WELL: TREATMENT WELL
GROUND SURFACE ELEVATION: DATUM:
START DATE: 7/24/2015 END DATE: 8/25/2015

TYPE OF DRILL RIG: CME 45B SKID-MTD.
AUGER SIZE AND TYPE: 8.25-INCH HOLLOW STEM
OVERBURDEN SAMPLING METHOD: 2-INCH SPLIT SPOON

DRIVE SAMPLER TYPE: SPLIT SPOON
INSIDE DIAMETER:
ROCK CORE BARREL: NX

DEPTH (FEET)	SAMPLE RECOVERY	RQD Value (%)	SAMPLE NO. AND DEPTH (FEET)	STRATA CHANGE (FEET)	VISUAL CLASSIFICATION	PID FIELD SCREEN (PPM)	DEPTH (FEET)	NOTE
16					Hole in rock created with a 7 7/8-inch roller bit.			
18								
20					End of Boring @ 20´.			
22								
24								
26								
28								
30								
32								

WATER LEVEL DATA				DEPTH (FT)			NOTES:
DATE	TIME		ELAPSED TIME	BOTTOM OF CASING	BOTTOM OF BORING	GROUNDWATER ENCOUNTERED	Set 8-inch diameter steel casing 5´ below grade. After coring rock to 5.5´, hole in rock created to 20´ with a 7 7/8-inch roller bit. Broken drill string leaves roller bit at 17´ from 7/29 to 8/25, when it is successfully removed. Driller reports losing ±125 gallons of water during coring and reaming of rock hole. Driller notes petroleum (fuel oil?) odor at ±19´.
				5	20	yes	

GENERAL NOTES

1) STRATIFICATION LINES REPRESENT APPROXIMATE BOUNDARY BETWEEN SOIL TYPES, TRANSITIONS MAY BE GRADUAL.
2) WATER LEVEL READINGS HAVE BEEN MADE AT TIMES AND UNDER CONDITIONS STATED, FLUCTUATIONS OF GROUNDWATER

and = 35 to 50 %
some = 20 to 35%
little = 10 to 20%
trace = 1 to 10%
c - coarse
m = medium
f = fine
ND = Non Detect
BGS = Below the Ground Surface
NA = Not Applicable

LABELLA Associates, P.C.

300 STATE STREET, ROCHESTER, NY
(585) 454-6110

BORING LOG
Remedial Measures NYSDEC BCP Site #C828159
690 St. Paul Street
Rochester, New York
Well Installations

BORING: **TW-11**
SHEET 1 OF 2
JOB: **209280**
CHKD BY:

CONTRACTOR: NYEG
DRILLER: H. Lyons
LABELLA REPRESENTATIVE: S. Rife

BORING LOCATION: INTERIOR
TYPE OF WELL: TREATMENT WELL
GROUND SURFACE ELEVATION: DATUM:
START DATE: 8/4/2015 END DATE: 8/6/2015

TYPE OF DRILL RIG: CME 45B SKID-MTD.
AUGER SIZE AND TYPE: 8.25-INCH HOLLOW STEM
OVERBURDEN SAMPLING METHOD: 2-INCH SPLIT SPOON

DRIVE SAMPLER TYPE: SPLIT SPOON
INSIDE DIAMETER:
ROCK CORE BARREL: NX

DEPTH (FEET)	SAMPLE RECOVERY	RQD Value (%)	SAMPLE NO. AND DEPTH (FEET)	STRATA CHANGE (FEET)	VISUAL CLASSIFICATION	PID FIELD SCREEN (PPM)	DEPTH (FEET)	NOTE
0				0.5	Remove concrete floor slab with core drill.			
					Brown vf Sand, little Silt, little m sub-rounded Gravel, dry, no odor	0.3		
2				2				
					Brown vf Sand, silty weathered material, moist, no odor	0.1		
				3.5				Weathered bedrock at 3.5´
4			Run 1 3.5´ - 6.0´		Thick mud seam, highly weathered and broken Dolostone, no petro. odor, wet, common Vertical Fractures noted. Horizontal Fractures common.			
				5.0		1.2		Mud seam very eroded.
6				5.7	Apparent competent bedrock @ 6.0´. Set steel casing @ 6.0´.			
			Run 2 6´ - 10´			5.0		
8					Weathered Dolostone, average 1" to 3" between fractures, abundant mud seams, petro odors noted @ 8.7´ and 9.3´. Samples of silty weathered bedrock taken, PID-screened core inside barrel and read 133 ppm at 9.3´.	17	8.3	Soil samples collected @ 8.4´ - 8.7´ and 9.3´.
						38	8.7	
10						133	9.3	
						54.7	10.5	
12			Run 3 10´ - 15´		Weathered Dolostone, average 3" to 4" between fractures, petro odors noted @ 10.5´, dissipate downward in the column.	10.1	12.1	
						1.2	13.1	
14								
16								

WATER LEVEL DATA				DEPTH (FT) BOTTOM OF CASING	DEPTH (FT) BOTTOM OF BORING	GROUNDWATER ENCOUNTERED
DATE	TIME		ELAPSED TIME			
				6	20	yes

NOTES:
Set 8-inch diameter steel casing 6´ below grade. After coring rock, hole in rock created with a 7 7/8-inch roller bit.

GENERAL NOTES

1) STRATIFICATION LINES REPRESENT APPROXIMATE BOUNDARY BETWEEN SOIL TYPES, TRANSITIONS MAY BE GRADUAL.
2) WATER LEVEL READINGS HAVE BEEN MADE AT TIMES AND UNDER CONDITIONS STATED, FLUCTUATIONS OF GROUNDWATER

and = 35 to 50 %
some = 20 to 35%
little = 10 to 20%
trace = 1 to 10%
c - coarse
m = medium
f = fine
ND = Non Detect
BGS = Below the Ground Surface
NA = Not Applicable

LABELLA Associates, P.C.
300 STATE STREET, ROCHESTER, NY
(585) 454-6110

BORING LOG
Remedial Measures NYSDEC BCP Site #C828159
690 St. Paul Street
Rochester, New York
Well Installations

BORING: **TW-11**
SHEET 2 OF 2
JOB: **209280**
CHKD BY:

CONTRACTOR: NYEG
DRILLER: H. Lyons
LABELLA REPRESENTATIVE: S. Rife

BORING LOCATION: INTERIOR
TYPE OF WELL: TREATMENT WELL
GROUND SURFACE ELEVATION: DATUM:
START DATE: 8/4/2015 END DATE: 8/6/2015

TYPE OF DRILL RIG: CME 45B SKID-MTD.
AUGER SIZE AND TYPE: 8.25-INCH HOLLOW STEM
OVERBURDEN SAMPLING METHOD: 2-INCH SPLIT SPOON

DRIVE SAMPLER TYPE: SPLIT SPOON
INSIDE DIAMETER:
ROCK CORE BARREL: NX

DEPTH (FEET)	SAMPLE RECOVERY	RQD Value (%)	SAMPLE NO. AND DEPTH (FEET)	STRATA CHANGE (FEET)	VISUAL CLASSIFICATION	PID FIELD SCREEN (PPM)	DEPTH (FEET)	NOTE
16			Run 4 15.5´ - 20´		Fairly intact Dolostone, fractures typically 5" to 6" apart, no	0.6		
18								
20					End of Boring @ 20´			
22								
24								
26								
28								
30								
32								

WATER LEVEL DATA				DEPTH (FT)		
DATE	TIME		ELAPSED TIME	BOTTOM OF CASING	BOTTOM OF BORING	GROUNDWATER ENCOUNTERED
				6	20	yes

NOTES:
Set 8-inch diameter steel casing 6´ below grade. After coring rock, hole in rock created to 20´ with a 7 7/8-inch roller bit. Driller reports losing ±60 gallons of water during coring and reaming of rock hole.

GENERAL NOTES

1) STRATIFICATION LINES REPRESENT APPROXIMATE BOUNDARY BETWEEN SOIL TYPES, TRANSITIONS MAY BE GRADUAL.
2) WATER LEVEL READINGS HAVE BEEN MADE AT TIMES AND UNDER CONDITIONS STATED, FLUCTUATIONS OF GROUNDWATER

and = 35 to 50 %
some = 20 to 35%
little = 10 to 20%
trace = 1 to 10%
c - coarse
m = medium
f = fine
ND = Non Detect
BGS = Below the Ground Surface
NA = Not Applicable

LABELLA Associates, P.C.
300 STATE STREET, ROCHESTER, NY
(585) 454-6110

BORING LOG
Remedial Measures NYSDEC BCP Site #C828159
690 St. Paul Street
Rochester, New York
Well Installations

BORING: **TW-12**
SHEET 1 OF 2
JOB: **209280**
CHKD BY:

CONTRACTOR: NYEG
DRILLER: H. Lyons
LABELLA REPRESENTATIVE: KR Miller
BORING LOCATION: INTERIOR, NORTHERNMOST OF INTERIOR TREATMENT WELLS
TYPE OF WELL: TREATMENT WELL
GROUND SURFACE ELEVATION: DATUM:
START DATE: 8/11/2015 END DATE: 8/14/2015

TYPE OF DRILL RIG: CME 45B SKID-MTD.
AUGER SIZE AND TYPE: 8.25-INCH HOLLOW STEM
OVERBURDEN SAMPLING METHOD: 2-INCH SPLIT SPOON
DRIVE SAMPLER TYPE: SPLIT SPOON
INSIDE DIAMETER:
ROCK CORE BARREL: NX

DEPTH (FEET)	SAMPLE RECOVERY	RQD Value (%)	SAMPLE NO. AND DEPTH (FEET)	STRATA CHANGE (FEET)	VISUAL CLASSIFICATION	PID FIELD SCREEN (PPM)	DEPTH (FEET)	NOTE
0					Remove ±7" thick concrete floor slab with core drill.			
						0.1		
					Hand auger refusal at 1.5´. Brown c Gravel and Cobbles atop brown c/f Gravel and c Sandy Silt (fill).			
	0.25	N/A	S-1 1.5´ - 1.7´		Split spoon refusal (large cobble) @ 1.7´.	0.3		
2					Auger with cutting head and hand auger to 2.25´.			
			S-1		Reddish-brown c Gravel atop broken Cobble and reddish-brown Clayey Silt with f Sand and trace c Gravel (native). More c Gravel near 4.3´	0.2		
4		N/A	2.25´ - 4.3´					Driller and helper note a petroleum (fuel oil?) odor at 4.3´.
	1.2´		Run 1		Auger refusal @ 4.3´.	0.2		
			4.3´ - 6´		Rubble 4.3´ to 4.7´. First intact core 4.8´ to 4.95´. Horizontal Fracture with Silt and f Gravel @ 5.1´. Rock more competent 5.2´to 5.6´.	1.4	5.1	Collected soil sample from 5.1´ and a rock core sample from 5.2´ to 5.9´.
6					Horizontal Fratures in rock core: 5.2´; 5.4´; 5.5´; 5.7´; 5.9.	0.2		
					Apparent competent bedrock @ 6´. Set steel casing @ 6´.			
	97%	9	Run 2		Medium to dark gray, fine-grained, non-fossiliferous Dolostone that is highly to moderately fractured. Fractures are mostly horizontal, but some low-angle vertical fractures are present.	1.3		
8			6´ - 11´			1.9		Collected soil sample from 9.5´ and a rock core sample from 9.5´ to 9.8´.
					Horizontal Fractures in rock core: 6.1´; 6.3´; 6.6´; 6.7´; 6.9´; 7´; 7.1´; 7.3´; 7.5´; 7.6´; 7.75´; 7.8´; 8´; 8.4´; 8.5´; 8.6´; 8.7´; 8.8´; 8.9´; 9.1´; 9.3´; 9.45´; 9.5´; 10´; 10.1´; 10.25´; 10.33´; 10.5´; 10.75´.	39	9.5	
10								
						17	10.4	
	100%	23	Run 3		Vertical Fractures in rock core from 13.4´ to 13.6´.			
12			11´ - 16´		Horizontal Fractures in rock core: 11.2´; 11.25´; 11.66´; 11.7´; 11.9´; 12.2´; 12.4´; 12.6´; 12.66´; 12.95´; 13.1´; 13.25´; 13.45´; 13.6´; 14.2´; 14.6´14.8´; 15´; 15.2´; 15.3´; 15.4´; 15.6´; 15.7´.			
14					Rock core appears similar to above.			Collected a rock core sample from 13.4´ to 13.75´.
16					Hole in rock created with a 7 7/8-inch roller bit.			

WATER LEVEL DATA				DEPTH (FT)			NOTES:
DATE	TIME		ELAPSED TIME	BOTTOM OF CASING	BOTTOM OF BORING	GROUNDWATER ENCOUNTERED	Set 8-inch diameter steel casing 6´ below grade. After coring rock to 16´, hole in rock created with a 7 7/8-inch roller bit. Driller reports losing ±40 gallons of water during coring and reaming of rock hole.
				6	20	yes	

GENERAL NOTES

1) STRATIFICATION LINES REPRESENT APPROXIMATE BOUNDARY BETWEEN SOIL TYPES, TRANSITIONS MAY BE GRADUAL.
2) WATER LEVEL READINGS HAVE BEEN MADE AT TIMES AND UNDER CONDITIONS STATED, FLUCTUATIONS OF GROUNDWATER

and = 35 to 50 %
some = 20 to 35%
little = 10 to 20%
trace = 1 to 10%
c - coarse
m = medium
f = fine
ND = Non Detect
BGS = Below the Ground Surface
NA = Not Applicable

LABELLA Associates, P.C.

300 STATE STREET, ROCHESTER, NY
(585) 454-6110

BORING LOG
Remedial Measures NYSDEC BCP Site #C828159
690 St. Paul Street
Rochester, New York
Well Installations

BORING: **TW-12**
SHEET 2 OF 2
JOB: **209280**
CHKD BY:

CONTRACTOR: NYEG
DRILLER: H. Lyons
LABELLA REPRESENTATIVE: KR Miller

BORING LOCATION: INTERIOR, NORTHERNMOST OF INTERIOR TREATMENT WELLS
TYPE OF WELL: TREATMENT WELL
GROUND SURFACE ELEVATION: DATUM:
START DATE: 8/11/2015 END DATE: 8/14/2015

TYPE OF DRILL RIG: CME 45B SKID-MTD.
AUGER SIZE AND TYPE: 8.25-INCH HOLLOW STEM
OVERBURDEN SAMPLING METHOD: 2-INCH SPLIT SPOON

DRIVE SAMPLER TYPE: SPLIT SPOON
INSIDE DIAMETER:
ROCK CORE BARREL: NX

DEPTH (FEET)	SAMPLE				VISUAL CLASSIFICATION	PID FIELD SCREEN (PPM)	DEPTH (FEET)	NOTE
	SAMPLE RECOVERY	RQD Value (%)	SAMPLE NO. AND DEPTH (FEET)	STRATA CHANGE (FEET)				
16					Hole in rock created with a 7 7/8-inch roller bit.			
18								
20					End of Boring @ 20´			
22								
24								
26								
28								
30								
32								

WATER LEVEL DATA				DEPTH (FT)			NOTES:
DATE	TIME		ELAPSED TIME	BOTTOM OF CASING	BOTTOM OF BORING	GROUNDWATER ENCOUNTERED	Set 8-inch diameter steel casing 6´ below grade. After coring rock, hole in rock created to 20´ with a 7 7/8-inch roller bit. Driller reports losing ±40 gallons of water during coring and reaming of rock hole.
				6	20	yes	

GENERAL NOTES

1) STRATIFICATION LINES REPRESENT APPROXIMATE BOUNDARY BETWEEN SOIL TYPES, TRANSITIONS MAY BE GRADUAL.
2) WATER LEVEL READINGS HAVE BEEN MADE AT TIMES AND UNDER CONDITIONS STATED, FLUCTUATIONS OF GROUNDWATER

and = 35 to 50 %
some = 20 to 35%
little = 10 to 20%
trace = 1 to 10%
c - coarse
m = medium
f = fine
ND = Non Detect
BGS = Below the Ground Surface
NA = Not Applicable

LABELLA Associates, P.C.

300 STATE STREET, ROCHESTER, NY
(585) 454-6110

BORING LOG
Remedial Measures NYSDEC BCP Site #C828159
690 St. Paul Street
Rochester, New York
Well Installations

BORING: **BW-19**
SHEET 1 OF 2
JOB: **209280**
CHKD BY:

CONTRACTOR: NYEG
DRILLER: H. Lyons
LABELLA REPRESENTATIVE: S. Rife & KR Miller

BORING LOCATION: EXTERIOR, SIDEWALK ON EASTERN SIDE OF ST. PAUL STREET R.O.W.
TYPE OF WELL: BEDROCK GROUNDWATER MONITORING WELL
GROUND SURFACE ELEVATION: DATUM:
START DATE: 7/15/2015 END DATE: 7/17/2015

TYPE OF DRILL RIG: CME 45B SKID-MTD.
AUGER SIZE AND TYPE: 5 7/8-INCH HOLLOW STEM
OVERBURDEN SAMPLING METHOD: 2-INCH SPLIT SPOON

DRIVE SAMPLER TYPE: SPLIT SPOON
INSIDE DIAMETER:
ROCK CORE BARREL: NX

DEPTH (FEET)	SAMPLE RECOVERY	RQD Value (%)	SAMPLE NO. AND DEPTH (FEET)	STRATA CHANGE (FEET)	VISUAL CLASSIFICATION	PID FIELD SCREEN (PPM)	DEPTH (FEET)	NOTE
0				0.5	Remove concrete sidewalk with core drill.			
2					Soils hand-cleared from 0.5´to 6.3´ due to underground utility Brown c Sand and c sub-rounded to angular Gravel, fill materials, bricks,			
4								
6								
8	100%	14	Run 1 6.3´ - 10´		Auger refusal @ 6.3´. Medium gray, fine-grained, non-fossiliferous Dolostone that is highly to moderately fractured. Fractures are mostly horizontal, and some Highly Fractured Zones (HFZs) are observed. Few vertical fractures are present.			
10					Horizontal Fractures in rock core: 6.5´; 6.7´; 6.9´; 7´; 7.5´; 7.7´; 7.85´; 8.1´; 8.4´; 8.7´; 9´; 9.4´; 9.65´; 10´. HFZs in rock core: 6.7´ to 6.9´; 7.5´ to 7.7´; 9´ to 9.2´; 9.4´ to 9.65´. Vertical Fractures in rock core: 7.85´ to 8.1´; 8.4´ to 8.7´.			
12	72%	0	Run 2 10´ - 14´		Apparent competent bedrock @ 10.0´. Set steel casing @ 10.0´. HFZs in rock core: 10´ to 10.65´; 10.85´ to 11.5´; 12.1´ to 12.3´. Horizontal Fractures in rock core: 10.65´; 10.85´; 11.5´; 11.7´; 12.1´. Rock core appears similar to above.			
14								
16								

WATER LEVEL DATA				DEPTH (FT) BOTTOM OF CASING	DEPTH (FT) BOTTOM OF BORING	GROUNDWATER ENCOUNTERED
DATE	TIME		ELAPSED TIME			
				10	21.4	yes

NOTES:
Set 6-inch diameter steel casing 10´ below grade. After coring rock, hole in rock created to 21.4´ with a 3 7/8-inch roller bit. Driller reports losing ±1,200 gallons of water during coring and reaming of rock hole.

GENERAL NOTES

1) STRATIFICATION LINES REPRESENT APPROXIMATE BOUNDARY BETWEEN SOIL TYPES, TRANSITIONS MAY BE GRADUAL.
2) WATER LEVEL READINGS HAVE BEEN MADE AT TIMES AND UNDER CONDITIONS STATED, FLUCTUATIONS OF GROUNDWATER

and = 35 to 50 %
some = 20 to 35%
little = 10 to 20%
trace = 1 to 10%
c - coarse
m = medium
f = fine
ND = Non Detect
BGS = Below the Ground Surface
NA = Not Applicable

LABELLA Associates, P.C.
300 STATE STREET, ROCHESTER, NY
(585) 454-6110

BORING LOG
Remedial Measures NYSDEC BCP Site #C828159
690 St. Paul Street
Rochester, New York
Well Installations

BORING: **BW-19**
SHEET 2 OF 2
JOB: **209280**
CHKD BY:

CONTRACTOR: NYEG
DRILLER: H. Lyons
LABELLA REPRESENTATIVE: S. Rife & KR Miller

BORING LOCATION: EXTERIOR, SIDEWALK ON EASTERN SIDE OF ST. PAUL STREET R.O.W.
TYPE OF WELL: BEDROCK GROUNDWATER MONITORING WELL
GROUND SURFACE ELEVATION: DATUM:
START DATE: 7/15/2015 END DATE: 7/17/2015

TYPE OF DRILL RIG: CME 45B SKID-MTD.
AUGER SIZE AND TYPE: 5 7/8-INCH HOLLOW STEM
OVERBURDEN SAMPLING METHOD: 2-INCH SPLIT SPOON

DRIVE SAMPLER TYPE: SPLIT SPOON
INSIDE DIAMETER:
ROCK CORE BARREL: NX

DEPTH (FEET)	SAMPLE RECOVERY	RQD Value (%)	SAMPLE NO. AND DEPTH (FEET)	STRATA CHANGE (FEET)	VISUAL CLASSIFICATION	PID FIELD SCREEN (PPM)	DEPTH (FEET)	NOTE
16	63%	0	Run 3 14´ - 17´		Poor recovery, so depths difficult to determine. Horizontal Fractures in rock core: 14.2´; 14.3´; 14.4´; 14.5´; 14.55´; 14.7´; 15´; 15.25´; 15.5´; 15.65´; 15.8´; 15.9´. Rock core appears similar to above.			
18	100%	62.5	Run 4 17´ - 21´		Picked up last 2" of Run 3 in Run 4. Rock core appears similar to above. Horizontal Fractures in rock core: 17.3´; 17.5´; 17.65´; 17.8´; 17.9´; 18.35´; 18.7´; 19.2´; 19.95´; 20.15´; 20.35´; 20.75´; 20.85´; 21´.			
20					Hole in rock created with a 3 7/8-inch roller bit.			
22					End of Boring @ 21.4´			
24								
26								
28								
30								
32								

WATER LEVEL DATA				DEPTH (FT)			NOTES
DATE	TIME		ELAPSED TIME	BOTTOM OF CASING	BOTTOM OF BORING	GROUNDWATER ENCOUNTERED	Set 6-inch diameter steel casing 10´ below grade. After coring rock, hole in rock created to 21.4´ with a 3 7/8-inch roller bit. Driller reports losing ±1,200 gallons of water during coring and reaming of rock hole. Boring was completed with 10 feet of 2-inch PVC well screen and 10 feet of 2-inch PVC riser.
				10	21.4	yes	

GENERAL NOTES

1) STRATIFICATION LINES REPRESENT APPROXIMATE BOUNDARY BETWEEN SOIL TYPES, TRANSITIONS MAY BE GRADUAL.
2) WATER LEVEL READINGS HAVE BEEN MADE AT TIMES AND UNDER CONDITIONS STATED, FLUCTUATIONS OF GROUNDWATER

and = 35 to 50 %
some = 20 to 35%
little = 10 to 20%
trace = 1 to 10%
c - coarse
m = medium
f = fine
ND = Non Detect
BGS = Below the Ground Surface
NA = Not Applicable

LABELLA Associates, P.C.

300 STATE STREET, ROCHESTER, NY
(585) 454-6110

BORING LOG
Remedial Measures NYSDEC BCP Site #C828159
690 St. Paul Street
Rochester, New York
Well Installations

BORING: **BW-20**
SHEET 1 OF 2
JOB: **209280**
CHKD BY:

CONTRACTOR: NYEG
DRILLER: H. Lyons
LABELLA REPRESENTATIVE: KR Miller

BORING LOCATION: INTERIOR
TYPE OF WELL: BEDROCK GROUNDWATER MONITORING WELL
GROUND SURFACE ELEVATION: DATUM:
START DATE: 8/17/2015 END DATE: 8/18/2015

TYPE OF DRILL RIG: CME 45B SKID-MTD.
AUGER SIZE AND TYPE: 5 7/8-INCH HOLLOW STEM
OVERBURDEN SAMPLING METHOD: 2-INCH SPLIT SPOON

DRIVE SAMPLER TYPE: SPLIT SPOON
INSIDE DIAMETER:
ROCK CORE BARREL: NX

DEPTH (FEET)	SAMPLE RECOVERY	RQD Value (%)	SAMPLE NO. AND DEPTH (FEET)	STRATA CHANGE (FEET)	VISUAL CLASSIFICATION	PID FIELD SCREEN (PPM)	DEPTH (FEET)	NOTE
0					Remove ±7" thick concrete floor slab with core drill.			
						0.0		
2					Hand-clear and auger to refusal 3.5´. Brown c Gravel, Sand, and Silty Clay with Cobbles. No odors.			
					Auger refusal @ 3.5´.			Attempted to use 5 7/8-inch augers to create "socket" for casing in top of rock, but rock is too hard. Used a 3 3/4-inch roller bit followed by 5 7/8-inch augers for socket.
4	93%	0	Run 1 3.5´ - 5´		Horizontal Fractures in rock core: 3.6´; 3.9´; 4.1´; 4.3´; 4.5´ (with f Gravel and trace Silt); 4.6´; 4.75.			
					Set steel casing @ 5´. Medium to dark gray, fine-grained, non-fossiliferous Dolostone that is highly to moderately fractured. Fractures are mostly horizontal, but some low-angle and vertical fractures are present.			
6						4.8	6.9	Fracture with Gravel and Silt
	100%	8	Run 2 5´ - 10´		Horizontal Fractures in rock core: rubble; 5.2´; 5.3´; rubble; 5.4´; 5.6´; 5.7´; 5.8´; 6.1´; rubble; 6.25´; 6.45´; 6.55´; 6.9´; 7.1; 7.3´; rubble; 7.4´; 7.6´; 7.7´; 7.95´; 8.2´; 8.5´; rubble; 9.1´; 9.4´; 10´.	26.7	7.6	Fracture with Gravel and Silt
8						118	8.5	Fracture with Gravel and Silt
					Vertical Fractures in rock core from 6.55´ to 6.9´. 45° Fracture below rubble @ 8.5´.	155	9.5	Fracture with Gravel and Silt
10								
					Rock core appears similar to above.			
						2.5	11.5	
12	100%	25	Run 3 10´ - 15´		Horizontal Fractures in rock core: rubble; 10.1´; 10.25´; 10.3´; 10.4´; 10.6´; 10.75´ to 10.8´; 11.2´; 11.4´; 11.5´; 11.75´; 11.9´; 12.1´; 12.2´; 12.4´; 12.5´; 12.6´; 12.7´; 12.9´; 13´; 13.4´; rubble; 13.5´; 13.8´; 13.95´; 14.5´; 14.6´; 14.75´; 15´.			
						11.5	13.5	
14								
16								

WATER LEVEL DATA				DEPTH (FT) BOTTOM OF CASING	BOTTOM OF BORING	GROUNDWATER ENCOUNTERED
DATE	TIME		ELAPSED TIME			
				5	20	yes

NOTES:
Set 6-inch diameter steel casing 5´ below grade. After coring rock, hole in rock created to 20´ with a 5 1/2-inch roller bit. Driller reports losing ±80 gallons of water during coring and reaming of rock hole.

GENERAL NOTES

1) STRATIFICATION LINES REPRESENT APPROXIMATE BOUNDARY BETWEEN SOIL TYPES, TRANSITIONS MAY BE GRADUAL.
2) WATER LEVEL READINGS HAVE BEEN MADE AT TIMES AND UNDER CONDITIONS STATED, FLUCTUATIONS OF GROUNDWATER

and = 35 to 50 %
some = 20 to 35%
little = 10 to 20%
trace = 1 to 10%
c - coarse
m = medium
f = fine
ND = Non Detect
BGS = Below the Ground Surface
NA = Not Applicable

LABELLA Associates, P.C.
300 STATE STREET, ROCHESTER, NY
(585) 454-6110

BORING LOG
Remedial Measures NYSDEC BCP Site #C828159
690 St. Paul Street
Rochester, New York
Well Installations

BORING: **BW-20**
SHEET 2 OF 2
JOB: **209280**
CHKD BY:

CONTRACTOR: NYEG
DRILLER: H. Lyons
LABELLA REPRESENTATIVE: KR Miller

BORING LOCATION: INTERIOR
TYPE OF WELL: BEDROCK GROUNDWATER MONITORING WELL
GROUND SURFACE ELEVATION: DATUM:
START DATE: 8/17/2015 END DATE: 8/18/2015

TYPE OF DRILL RIG: CME 45B SKID-MTD.
AUGER SIZE AND TYPE: 8.25-INCH HOLLOW STEM
OVERBURDEN SAMPLING METHOD: 2-INCH SPLIT SPOON

DRIVE SAMPLER TYPE: SPLIT SPOON
INSIDE DIAMETER:
ROCK CORE BARREL: NX

DEPTH (FEET)	SAMPLE RECOVERY	RQD Value (%)	SAMPLE NO. AND DEPTH (FEET)	STRATA CHANGE (FEET)	VISUAL CLASSIFICATION	PID FIELD SCREEN (PPM)	DEPTH (FEET)	NOTE
16	100%	79	Run 4 15´ - 20´					
						0.8	16.5	
					Horizontal Fractures in rock core: rubble; 15.2´; 15.75´; 16.2´; 16.3´; 16.4´; 16.5´; 16.6´; 16.7´; 16.8´; 17.1´; 17.65´; 18.4´; 18.8´; 19.5.			
18						0.5	18	
					Rock core appears similar to above.	1.0	18.75	
20					End of Boring @ 20´			
22								
24								
26								
28								
30								
32								

WATER LEVEL DATA				DEPTH (FT) BOTTOM OF CASING	DEPTH (FT) BOTTOM OF BORING	GROUNDWATER ENCOUNTERED
DATE	TIME		ELAPSED TIME			
				5	20	yes

NOTES:
Set 6-inch diameter steel casing 5´ below grade. After coring rock, hole in rock created to 20´ with a 5 1/2-inch roller bit. Driller reports losing ±80 gallons of water during coring and reaming of rock hole. Well left as open rock well; no PVC well materials used.

GENERAL NOTES

1) STRATIFICATION LINES REPRESENT APPROXIMATE BOUNDARY BETWEEN SOIL TYPES, TRANSITIONS MAY BE GRADUAL.
2) WATER LEVEL READINGS HAVE BEEN MADE AT TIMES AND UNDER CONDITIONS STATED, FLUCTUATIONS OF GROUNDWATER

and = 35 to 50 %
some = 20 to 35%
little = 10 to 20%
trace = 1 to 10%
c - coarse
m = medium
f = fine
ND = Non Detect
BGS = Below the Ground Surface
NA = Not Applicable

LABELLA Associates, P.C.
300 STATE STREET, ROCHESTER, NY
(585) 454-6110

BORING LOG
Remedial Measures NYSDEC BCP Site #C828159
690 St. Paul Street
Rochester, New York
Well Installations

BORING: **EW-1**
SHEET 1 OF 1
JOB: **209280**
CHKD BY:

CONTRACTOR: NYEG
DRILLER: H. Lyons
LABELLA REPRESENTATIVE: KR Miller

BORING LOCATION: INTERIOR, NEAR TOP OF SLOPE OF FORMER TUNNEL UNDER ST. PAUL STREET
TYPE OF WELL: EXTRACTION WELL
GROUND SURFACE ELEVATION: DATUM:
START DATE: 8/19/2015 END DATE: 8/19/2015

TYPE OF DRILL RIG: CME 45B SKID-MTD.
AUGER SIZE AND TYPE: 8.25-INCH HOLLOW STEM
OVERBURDEN SAMPLING METHOD: 2-INCH SPLIT SPOON

DRIVE SAMPLER TYPE: SPLIT SPOON
INSIDE DIAMETER:
ROCK CORE BARREL: NX

DEPTH (FEET)	SAMPLE RECOVERY	RQD Value (%)	SAMPLE NO. AND DEPTH (FEET)	STRATA CHANGE (FEET)	VISUAL CLASSIFICATION	PID FIELD SCREEN (PPM)	DEPTH (FEET)	NOTE
0					Remove ±7" thick concrete floor slab with core drill. Hand auger refusal at 1´. Augers bounce off two (2) steel pipes running parallel to each other at 1.5´. Further investigation suggests that these pipes are abandoned electrical conduits that daylight to the north of this boring location. Will adjust this boring location slightly to the west (see boring EW-1A).			
2								
4								
6								
8								
10								
12								
14								
16								

WATER LEVEL DATA				DEPTH (FT)			NOTES:
DATE	TIME		ELAPSED TIME	BOTTOM OF CASING	BOTTOM OF BORING	GROUNDWATER ENCOUNTERED	
				N/A	1.5	no	

GENERAL NOTES

1) STRATIFICATION LINES REPRESENT APPROXIMATE BOUNDARY BETWEEN SOIL TYPES, TRANSITIONS MAY BE GRADUAL.
2) WATER LEVEL READINGS HAVE BEEN MADE AT TIMES AND UNDER CONDITIONS STATED, FLUCTUATIONS OF GROUNDWATER

and = 35 to 50 %
some = 20 to 35%
little = 10 to 20%
trace = 1 to 10%
c - coarse
m = medium
f = fine
ND = Non Detect
BGS = Below the Ground Surface
NA = Not Applicable

LABELLA Associates, P.C.
300 STATE STREET, ROCHESTER, NY
(585) 454-6110

BORING LOG
Remedial Measures NYSDEC BCP Site #C828159
690 St. Paul Street
Rochester, New York
Well Installations

BORING: **EW-1A**
SHEET 1 OF 2
JOB: **209280**
CHKD BY:

CONTRACTOR: NYEG
DRILLER: H. Lyons
LABELLA REPRESENTATIVE: KR Miller

BORING LOCATION: INTERIOR, NEAR TOP OF SLOPE OF FORMER TUNNEL UNDER ST. PAUL STREET
TYPE OF WELL: EXTRACTION WELL
GROUND SURFACE ELEVATION: DATUM:
START DATE: 8/19/2015 END DATE: 8/25/2015

TYPE OF DRILL RIG: CME 45B SKID-MTD.
AUGER SIZE AND TYPE: 8.25-INCH HOLLOW STEM
OVERBURDEN SAMPLING METHOD: 2-INCH SPLIT SPOON

DRIVE SAMPLER TYPE: SPLIT SPOON
INSIDE DIAMETER:
ROCK CORE BARREL: NX

DEPTH (FEET)	SAMPLE RECOVERY	RQD Value (%)	SAMPLE NO. AND DEPTH (FEET)	STRATA CHANGE (FEET)	VISUAL CLASSIFICATION	PID FIELD SCREEN (PPM)	DEPTH (FEET)	NOTE
0					Remove ±10" thick concrete floor slab with core drill.			
						0.2		
					Hand clear to 2´. Brown Clayey Silt with c Gravel and Cobbles (fill).			
2								
	100%		Run 1		Auger refusal @ 3´.			
4		0	3´ - 5´		Horizontal Fractures in rock core: rubble; 3.1´; 3.3´; 3.5´; 3.8´; rubble; 4.1´; 4.3´; 4.4´; mud seam from 4.5´ to 4.6´; 4.7´; 4.8´; rubble. Vertical Fracture from 3.3´ to 3.5´.	1.2	3.3	
					High-angle Fracture from 4.1´ to 4.3´.	1.4	4.5	
	100%	21	Run 2		Set steel casing @ 5´. Short run due to clogged core barrel. Horizontal Fractures in rock core: rubble; 5.2´; 5.5´; 5.7´; rubble; 5.85´; 6.1´; 6.5´; rubble; 6.7´.	0.1		
6			5´ - 6.75´			7.5	6.75	
	100%	57	Run 3		Medium to dark gray, fine-grained, non-fossiliferous Dolostone that is highly to moderately fractured. Fractures are mostly horizontal, but some low-angle and vertical fractures are present.	0.4	7	
8			6.75´ - 10´			27	8	Collected soil samples from 8.7´ and 9.5´. Collected a rock core sample from 8.8´ to 9.4´.
					Horizontal Fractures in rock core: 6.9´; 7´; 7.35´; 7.6´; 7.95´; 8.4´; 8.65´; 8.7´; 9.1´; 9.4´; 9.85´; 10´.	421	8.7	.
10						27	9.5	
	98%	31	Run 4		Rock core appears similar to above. Vertical Fracture from 10.2´ to 10.4´.			
12			10´ - 15´		Horizontal Fractures in rock core: 10.2´; 10.4´; 10.65´; 10.8´; 10.85´; 11´; 11.25´; 11.7´; 11.85´; 11.95´; 12.4´; 12.6´; 12.7´; 12.8´; 13´; 13.05´; 13.2´; 13.6´; 13.8´; 14.2´; 14.35´; 14.65´; 10.65´; 14.9´.	0.1		
14								Collected a rock core sample from 13.8´ to 14.15´.
16								

WATER LEVEL DATA				DEPTH (FT)			NOTES:
DATE	TIME		ELAPSED TIME	BOTTOM OF CASING	BOTTOM OF BORING	GROUNDWATER ENCOUNTERED	Set 6-inch diameter steel casing 5´ below grade. After coring rock to 25´, hole in rock created with a 5 7/8-inch roller bit. Driller reports losing ±15 gallons of water during coring and reaming of rock hole. Boring was completed with 20 feet of 4-inch PVC well screen and 5 feet of 4-inch PVC riser.
				5	25	yes	

GENERAL NOTES

1) STRATIFICATION LINES REPRESENT APPROXIMATE BOUNDARY BETWEEN SOIL TYPES, TRANSITIONS MAY BE GRADUAL.
2) WATER LEVEL READINGS HAVE BEEN MADE AT TIMES AND UNDER CONDITIONS STATED, FLUCTUATIONS OF GROUNDWATER

and = 35 to 50 %
some = 20 to 35%
little = 10 to 20%
trace = 1 to 10%
c - coarse
m = medium
f = fine
ND = Non Detect
BGS = Below the Ground Surface
NA = Not Applicable

LABELLA Associates, P.C.

300 STATE STREET, ROCHESTER, NY
(585) 454-6110

BORING LOG
Remedial Measures NYSDEC BCP Site #C828159
690 St. Paul Street
Rochester, New York
Well Installations

BORING: **EW-1A**
SHEET 2 OF 2
JOB: **209280**
CHKD BY:

CONTRACTOR: NYEG
DRILLER: H. Lyons
LABELLA REPRESENTATIVE: KR Miller

BORING LOCATION: INTERIOR, NEAR TOP OF SLOPE OF FORMER TUNNEL UNDER ST. PAUL STREET
TYPE OF WELL: EXTRACTION WELL
GROUND SURFACE ELEVATION: DATUM:
START DATE: 8/19/2015 END DATE: 8/25/2015

TYPE OF DRILL RIG: CME 45B SKID-MTD.
AUGER SIZE AND TYPE: 8.25-INCH HOLLOW STEM
OVERBURDEN SAMPLING METHOD: 2-INCH SPLIT SPOON

DRIVE SAMPLER TYPE: SPLIT SPOON
INSIDE DIAMETER:
ROCK CORE BARREL: NX

DEPTH (FEET)	SAMPLE RECOVERY	RQD Value (%)	SAMPLE NO. AND DEPTH (FEET)	STRATA CHANGE (FEET)	VISUAL CLASSIFICATION	PID FIELD SCREEN (PPM)	DEPTH (FEET)	NOTE
16	98%	62	Run 5 15´ - 20´		Rock core appears similar to above. Horizontal Fractures in rock core: 15.0´; 15.2´; 15.3´; 15.65´; 15.85´; 16.05´; 16.2´; 16.3´; 16.45´; 16.55´; 16.65´; 17.05´; 17.1´; 17.´; 18´; 18.75´; 19´; 19.35´; 19.55´; 19.85´; 20´ .	0.1 1.5	18	Collected a soil sample from 18´.
20								Driller noted apparent petroleum odors from 19´ and 21´.
	100%	78	Run 6 20´ - 25´		Rock core appears similar to above. Horizontal Fractures in rock core: 20.4´; 21.15´; 21.25´; 21.7´; 21.95´; 22.45´; 23´; 23.2´; 23.25´; 23.4´; 23.85´; 23.875´; 24.35´; 24.85´. Vertical Fracture from 23´ to 23.2´.	0.1		
24								
					End of Boring @ 25´			
26								
28								
30								
32								

WATER LEVEL DATA				DEPTH (FT)			NOTES:
DATE	TIME		ELAPSED TIME	BOTTOM OF CASING	BOTTOM OF BORING	GROUNDWATER ENCOUNTERED	Set 6-inch diameter steel casing 5´ below grade. After coring rock to 25´, hole in rock created with a 5 7/8-inch roller bit. Driller reports losing ±15 gallons of water during coring and reaming of rock hole. Boring was completed with 20 feet of 4-inch PVC well screen and 5 feet of 4-inch PVC riser.
				5	25	yes	

GENERAL NOTES

1) STRATIFICATION LINES REPRESENT APPROXIMATE BOUNDARY BETWEEN SOIL TYPES, TRANSITIONS MAY BE GRADUAL.
2) WATER LEVEL READINGS HAVE BEEN MADE AT TIMES AND UNDER CONDITIONS STATED, FLUCTUATIONS OF GROUNDWATER

and = 35 to 50 %
some = 20 to 35%
little = 10 to 20%
trace = 1 to 10%
c - coarse
m = medium
f = fine
ND = Non Detect
BGS = Below the Ground Surface
NA = Not Applicable

LABELLA Associates, P.C.

300 STATE STREET, ROCHESTER, NY
(585) 454-6110

BORING LOG
Remedial Measures NYSDEC BCP Site #C828159
690 St. Paul Street
Rochester, New York
Well Installations

BORING: **EW-2**
SHEET 1 OF 2
JOB: **209280**
CHKD BY:

CONTRACTOR: NYEG
DRILLER: H. Lyons
LABELLA REPRESENTATIVE: KR Miller

BORING LOCATION: INTERIOR, TO THE SOUTH OF EW-1A AND BW-20
TYPE OF WELL: EXTRACTION WELL
GROUND SURFACE ELEVATION: DATUM:
START DATE: 8/26/2015 END DATE: 8/25/2015

TYPE OF DRILL RIG: CME 45B SKID-MTD.
AUGER SIZE AND TYPE: 8.25-INCH HOLLOW STEM
OVERBURDEN SAMPLING METHOD: 2-INCH SPLIT SPOON

DRIVE SAMPLER TYPE: SPLIT SPOON
INSIDE DIAMETER:
ROCK CORE BARREL: NX

DEPTH (FEET)	SAMPLE RECOVERY	RQD Value (%)	SAMPLE NO. AND DEPTH (FEET)	STRATA CHANGE (FEET)	VISUAL CLASSIFICATION	PID FIELD SCREEN (PPM)	DEPTH (FEET)	NOTE
0					Concrete floor slab is very thick here; various methods used to penetrate it (e.g., core drill, jack hammer). Concrete floor slab sits atop bedrock here at 2.8´. Use roller bit to advance to 3.1´, and then begin Run 1.			
2								
	100%		Run 1		Concrete atop bedrock at 2.8´.			
4		0	3.1´ - 5´		Horizontal Fractures in rock core: 3.3´; rubble; 3.5´; 3.65´; Silt and Gravel;3.7´; 3.8´; rubble; 4´; 4.1´; 4.3´; 4.6´; 4.65´; 4.75´ 4.9´. Vertical Fracture from 4.1´ to 4.3´.	0.2		
						0.2		
6	98%	24	Run 2		Use roller bit to open "socket" in rock and set steel casing @ 5´. Horizontal Fractures in rock core: 5.15´; 5.2´; rubble; 5.3´; 5.35´; 5.6´; 6´; 6.3´; 6.45´; 6.65´; 6.8´; 6.95´; 7.3´; rubble; 7.4´; 7.55´; 7.8´; 8´.			
			5´ - 10´					
8					Medium to dark gray, fine-grained, non-fossiliferous Dolostone that is highly to moderately fractured. Fractures are mostly horizontal, but some low-angle and vertical fractures are present. Vertical Fracture from 7.8´ to 8´.			Collected soil samples from 9.75´ and 9.9´. Collected a rock core sample from 9.4´ to 9.85´.
					Horizontal Fractures in rock core: 8.1´; 8.45´; 8.7´; 8.95´; 9.4´; trace Silt; 9.5´; 9.7´; 9.85´.	143	9.4	
10						163	9.75	
						112	9.9	
	100%	0	Run 3		Horizontal Fractures in rock core: rubble; 10.3´; 10.6´; Silt and Gravel; 10.65´; 10.8´; 10.85´; 10.95´; 11.1´; 11.2´; 11.3´; 11.4´; 11.6´; rubble; 11.8´; 12´. Vertical Fractures from 10.65´ to 10.8´ and 11.8´ to 12´. Rock core appears similar to above.			
			10´ - 12´			1.7	10.5	
12						5.1	11.1	
						51	11.5	
	90%	27	Run 4			1.6	12	
					Horizontal Fractures in rock core: 12.4´; 12.6´; 12.8´; 13.2´; 13.25´; 13.4´; 13.6´; 13.65´; 13.8´; 13.95´; 14.1´; 14.2´; 14.3´; 14.65´; 14.9´.			Collected a rock core sample from 14.3´ to 14.65´.
14			12´ - 15´		Rock core appears similar to above.			
16								

WATER LEVEL DATA				DEPTH (FT)			NOTES:
DATE	TIME		ELAPSED TIME	BOTTOM OF CASING	BOTTOM OF BORING	GROUNDWATER ENCOUNTERED	Set 6-inch diameter steel casing 5´ below grade. After coring rock to 25´, hole in rock created with a 5 7/8-inch roller bit. Driller reports losing ±40 gallons of water during coring and reaming of rock hole. Boring was completed with 20 feet of 4-inch PVC well screen and 5 feet of 4-inch PVC riser.
				5	25	yes	

GENERAL NOTES

1) STRATIFICATION LINES REPRESENT APPROXIMATE BOUNDARY BETWEEN SOIL TYPES, TRANSITIONS MAY BE GRADUAL.
2) WATER LEVEL READINGS HAVE BEEN MADE AT TIMES AND UNDER CONDITIONS STATED, FLUCTUATIONS OF GROUNDWATER

and = 35 to 50 %
some = 20 to 35%
little = 10 to 20%
trace = 1 to 10%
c - coarse
m = medium
f = fine
ND = Non Detect
BGS = Below the Ground Surface
NA = Not Applicable

LABELLA Associates, P.C.
300 STATE STREET, ROCHESTER, NY
(585) 454-6110

BORING LOG
Remedial Measures NYSDEC BCP Site #C828159
690 St. Paul Street
Rochester, New York
Well Installations

BORING: **EW-2**
SHEET 2 OF 2
JOB: **209280**
CHKD BY:

CONTRACTOR: NYEG
DRILLER: H. Lyons
LABELLA REPRESENTATIVE: KR Miller

BORING LOCATION: INTERIOR, TO THE SOUTH OF EW-1A AND BW-20
TYPE OF WELL: EXTRACTION WELL
GROUND SURFACE ELEVATION: DATUM:
START DATE: 8/26/2015 END DATE: 8/25/2015

TYPE OF DRILL RIG: CME 45B SKID-MTD.
AUGER SIZE AND TYPE: 8.25-INCH HOLLOW STEM
OVERBURDEN SAMPLING METHOD: 2-INCH SPLIT SPOON

DRIVE SAMPLER TYPE: SPLIT SPOON
INSIDE DIAMETER:
ROCK CORE BARREL: NX

DEPTH (FEET)	SAMPLE RECOVERY	RQD Value (%)	SAMPLE NO. AND DEPTH (FEET)	STRATA CHANGE (FEET)	VISUAL CLASSIFICATION	PID FIELD SCREEN (PPM)	DEPTH (FEET)	NOTE
16	100%	48	Run 5 15´ - 20´		Rock core appears similar to above. Horizontal Fractures in rock core: 15.1´; 15.35´; 15.5´; Highly Fractured Zone (HFZ); 15.6´; 15.9´; 16.35´; 16.5´; 16.6´; 16.7´; 16.8´; 16.95´; 17.1´; 17.2´; HFZ; 17.3´; 17.45´; 17.6´; 18´; 18.3´; 18.675´; 18.8´; 19.3´. HFZs in rock core: 15.5´ to 15.6´ and 17.2´ to 17.3´. Solution cavity @ 19.0´.	0.2 0.2		Collected a rock core sample from 19.3´ to 19.7´. Driller noted apparent petroleum odor @19.7´.
18								
20								
22	96%	84	Run 6 20´ - 25´		Rock core appears similar to above. Horizontal Fractures in rock core: 20.5´; 20.6´; 20.8´; 21.6´; 22.45´; 22.6´; 22.85´; 22.9´; 23.6´; 24.2´; 24.7´.	0.2		
24								
26					End of Boring @ 25´			
28								
30								
32								

WATER LEVEL DATA				DEPTH (FT)			NOTES:
DATE	TIME		ELAPSED TIME	BOTTOM OF CASING	BOTTOM OF BORING	GROUNDWATER ENCOUNTERED	Set 6-inch diameter steel casing 5´ below grade. After coring rock to 25´, hole in rock created with a 5 7/8-inch roller bit. Driller reports losing ±40 gallons of water during coring and reaming of rock hole. Boring was completed with 20 feet of 4-inch PVC well screen and 5 feet of 4-inch PVC riser.
				5	25	yes	

GENERAL NOTES

1) STRATIFICATION LINES REPRESENT APPROXIMATE BOUNDARY BETWEEN SOIL TYPES, TRANSITIONS MAY BE GRADUAL.
2) WATER LEVEL READINGS HAVE BEEN MADE AT TIMES AND UNDER CONDITIONS STATED, FLUCTUATIONS OF GROUNDWATER

and = 35 to 50 %
some = 20 to 35%
little = 10 to 20%
trace = 1 to 10%
c - coarse
m = medium
f = fine
ND = Non Detect
BGS = Below the Ground Surface
NA = Not Applicable

LABELLA Associates, P.C.

300 STATE STREET, ROCHESTER, NY
(585) 454-6110

BORING LOG
Remedial Measures NYSDEC BCP Site #C828159
690 St. Paul Street
Rochester, New York
Well Installations

BORING: **EW-3**
SHEET 1 OF 2
JOB: **209280**
CHKD BY:

CONTRACTOR: NYEG
DRILLER: H. Lyons
LABELLA REPRESENTATIVE: KR Miller

BORING LOCATION: EXTERIOR, SIDEWALK ON EASTERN SIDE OF ST. PAUL STREET R.O.W.
TYPE OF WELL: EXTRACTION WELL
GROUND SURFACE ELEVATION: DATUM:
START DATE: 9/1/2015 END DATE: 9/2/2015

TYPE OF DRILL RIG: CME 45B SKID-MTD.
AUGER SIZE AND TYPE: 8.25-INCH HOLLOW STEM
OVERBURDEN SAMPLING METHOD: 2-INCH SPLIT SPOON

DRIVE SAMPLER TYPE: SPLIT SPOON
INSIDE DIAMETER:
ROCK CORE BARREL: NX

DEPTH (FEET)	SAMPLE RECOVERY	RQD Value (%)	SAMPLE NO. AND DEPTH (FEET)	STRATA CHANGE (FEET)	VISUAL CLASSIFICATION	PID FIELD SCREEN (PPM)	DEPTH (FEET)	NOTE
0			0.5		Remove concrete sidewalk with core drill.			
					Brown Sand and m/c sub-rounded Gravel, some Cobbles, trace Silt, moist to wet, no odor.	0.0		Concrete encountered at 3.2´
2								
						0.0		
4								
						0.0		
6					Auger refusal @ 6´.			
	90%	0	Run 1 7´ - 10´		Intensely fractured Dolostone, mud seams and vertical fractures, cobbles. PID readings taken @ mud seams, no odor.	0.7		Lost ±125 gallons of water during coring.
8						0.2		
10								
	94%	17	Run 2 10´ - 15´		Use roller bit to open "socket" in rock and set steel casing @ 9.7´. Medium to dark gray, fine-grained, non-fossiliferous Dolostone that is highly to moderately fractured. Fractures are mostly horizontal, but some low-angle and vertical fractures are present.	1.0	11.2	
12					Horizontal Fractures in rock core: 10.1´; 10.15´; 10.3´; 10.5´; 10.6´; 10.7´; 10.85´; 10.9´; 11.05´; 11.1´; rubble; 11.2´; 11.5´; 11.7´; 12.1´; 12.25´.	28	12.2	
					12.35´; 12.55´; 12.85´; 12.95´ 13.1´; 13.3´; 13.4´; 13.6´; rubble from 13.6´ to 13.9´; 14.1´; 14.3´; 14.7´; 14.75´.	1.8	12.9	Collected a Silt/Gravel sample from 12.2´. Collected a rock core sample from 12.25´ to 12.55´.
					45° Fracture from 10.25´ to 10.3´.	1.6	13.6	
14					Vertical Fracture from High-angle Fracture from 14.3´ to 14.5´. Silt/Gravel in Fractures: 11.2´; 12.2´ to 12.25´; 12.85´ to 12.95´; 13.6´.			
16								

WATER LEVEL DATA				DEPTH (FT)			NOTES:
DATE	TIME		ELAPSED TIME	BOTTOM OF CASING	BOTTOM OF BORING	GROUNDWATER ENCOUNTERED	Set 6-inch diameter steel casing 9.7´ below grade. After coring rock to 30´, hole in rock created with a 5 7/8-inch roller bit. Driller reports losing ±150 gallons of water during coring and reaming of rock hole. Boring was completed with 20 feet of 4-inch PVC well screen and 10.8 feet of 4-inch PVC riser.
				9.7	30.8	yes	

GENERAL NOTES

1) STRATIFICATION LINES REPRESENT APPROXIMATE BOUNDARY BETWEEN SOIL TYPES, TRANSITIONS MAY BE GRADUAL.
2) WATER LEVEL READINGS HAVE BEEN MADE AT TIMES AND UNDER CONDITIONS STATED, FLUCTUATIONS OF GROUNDWATER

and = 35 to 50 %
some = 20 to 35%
little = 10 to 20%
trace = 1 to 10%
c - coarse
m = medium
f = fine
ND = Non Detect
BGS = Below the Ground Surface
NA = Not Applicable

LABELLA Associates, P.C.

300 STATE STREET, ROCHESTER, NY
(585) 454-6110

BORING LOG
Remedial Measures NYSDEC BCP Site #C828159
690 St. Paul Street
Rochester, New York
Well Installations

BORING: **EW-3**
SHEET 2 OF 2
JOB: **209280**
CHKD BY:

CONTRACTOR: NYEG
DRILLER: H. Lyons
LABELLA REPRESENTATIVE: KR Miller

BORING LOCATION: EXTERIOR, SIDEWALK ON EASTERN SIDE OF ST. PAUL STREET R.O.W.
TYPE OF WELL: EXTRACTION WELL
GROUND SURFACE ELEVATION: DATUM:
START DATE: 9/1/2015 END DATE: 9/2/2015

TYPE OF DRILL RIG: CME 45B SKID-MTD.
AUGER SIZE AND TYPE: 8.25-INCH HOLLOW STEM
OVERBURDEN SAMPLING METHOD: 2-INCH SPLIT SPOON

DRIVE SAMPLER TYPE: SPLIT SPOON
INSIDE DIAMETER:
ROCK CORE BARREL: NX

DEPTH (FEET)	SAMPLE RECOVERY	RQD Value (%)	SAMPLE NO. AND DEPTH (FEET)	STRATA CHANGE (FEET)	VISUAL CLASSIFICATION	PID FIELD SCREEN (PPM)	DEPTH (FEET)	NOTE
16	100%	27	Run 3 15´ - 20´		Rock core appears similar to above. Horizontal Fractures in rock core: 15´; 15.24´; 15.25´; 15.34´; 15.6´; 15.75´; 15.95´; 16.05´; 16.3´; 16.7´; 17.1´; 17.2´; 17.3´; 17.45´; 17.7´; 17.95´; 18.3´; 18.9´; 18.95´; 19.15´; 19.4´; 19.65´; 19.75´; 19.9´.	0.0 0.0		Collected a rock core sample from 17.2´ to 17.5´.
18								
20								
22	100%	54	Run 4 20´ - 25´		Rock core appears similar to above. Horizontal Fractures in rock core: 20.1´; 20.3´; 20.65´; 21.3´; 21.35´; 21.7´; 22.35´; 22.9´; 23.4´; 23.6´; 23.75´; 23.9´; 24.2´; 24.4´; 24.55´; 24.7´; 24.8´.	0.4 0.6	21.35 21.7	
24								
26	100%	52	Run 5 25´ - 30´		Rock core appears similar to above. Horizontal Fractures in rock core: 25.3´; 25.95´; 26.55´; 27.5´; 29.7´.			
28								
30								
32					End of Boring @ 30.8´			

WATER LEVEL DATA				DEPTH (FT)			NOTES:
DATE	TIME		ELAPSED TIME	BOTTOM OF CASING	BOTTOM OF BORING	GROUNDWATER ENCOUNTERED	Set 6-inch diameter steel casing 9.7´ below grade. After coring rock to 30´, hole in rock created with a 5 7/8-inch roller bit. Driller reports losing ±150 gallons of water during coring and reaming of rock hole. Boring was completed with 20 feet of 4-inch PVC well screen and 10.8 feet of 4-inch PVC riser.
				9.7	30.8	yes	

GENERAL NOTES

1) STRATIFICATION LINES REPRESENT APPROXIMATE BOUNDARY BETWEEN SOIL TYPES, TRANSITIONS MAY BE GRADUAL.
2) WATER LEVEL READINGS HAVE BEEN MADE AT TIMES AND UNDER CONDITIONS STATED, FLUCTUATIONS OF GROUNDWATER

and = 35 to 50 %
some = 20 to 35%
little = 10 to 20%
trace = 1 to 10%
c - coarse
m = medium
f = fine
ND = Non Detect
BGS = Below the Ground Surface
NA = Not Applicable

LABELLA Associates, P.C.

300 STATE STREET, ROCHESTER, NY
ENVIRONMENTAL ENGINEERING CONSULTANTS

PROJECT
690 Saint Paul Street
Rochester, New York
BCP Site #C828159

BORING: SB-14
SHEET 1 OF
JOB: 209280
CHKD BY: ED

CONTRACTOR: Nothnagle Drilling, Inc. BORING LOCATION: TIME: TO
DRILLER: J. Swytzer GROUND SURFACE ELEVATION: DATUM:
LABELLA REPRESENTATIVE: E. Dumrese START DATE: 3/24/2010 END DATE: 3/24/2010

TYPE OF DRILL RIG: Track Mounted Geoprobe Model 6610DT
AUGER SIZE AND TYPE: NA
OVERBURDEN SAMPLING METHOD: Direct Push
DRIVE SAMPLER TYPE: 4-foot Macrocore
INSIDE DIAMETER: ~1.8-Inch
OTHER:

DEPTH	SAMPLE NO. AND DEPTH	SAMPLE RECOVERY	STRATA CHANGE	VISUAL CLASSIFICATION	PID FIELD SCREEN (PPM)	LUDLUM FIELD SCREEN (µREM/H)
0	S-1 0' to 4'	1.8'	0.0'	Concrete		
			0.3'	Brown, mc SAND, little Silt and Gravel, moist, no odor	0.0	13
2					0.0	
4	S-2 4' - 8'	1.3'	4.0'	As above, wet @ ~4.0' BGS, no odor	1.1	12
6					0	
				Refusal @ ~ 6.5' BGS		
8						
10						
12						
14						
16						
18						

WATER LEVEL DATA			BOTTOM OF CASING	BOTTOM OF BORING	GROUNDWATER ENCOUNTERED
DATE	TIME	ELAPSED TIME			
				6.5'	4.0'

NOTES:

GENERAL NOTES
1) STRATIFICATION LINES REPRESENT APPROXIMATE BOUNDARY BETWEEN SOIL TYPES, TRANSITIONS MAY BE GRADUAL.
2) WATER LEVEL READINGS HAVE BEEN MADE AT TIMES AND UNDER CONDITIONS STATED, FLUCTUATIONS OF GROUNDWATER
3) Abbreviations
and = 35 to 50 %
some = 20 to 35%
little = 10 to 20%
trace = 1 to 10%
c = coarse
m = medium
f = fine
vf = very fine
BGS = Below the Ground Surface
NA = Not Applicable

BORING: SB-14

LABELLA Associates, P.C.

300 STATE STREET, ROCHESTER, NY
ENVIRONMENTAL ENGINEERING CONSULTANTS

PROJECT
690 Saint Paul Street
Rochester, New York
BCP Site #C828159

BORING: **SB-15**
SHEET 1 OF
JOB: **209280**
CHKD BY: ED

CONTRACTOR: Nothnagle Drilling, Inc. BORING LOCATION: TIME: TO
DRILLER: J. Swytzer GROUND SURFACE ELEVATION: DATUM:
LABELLA REPRESENTATIVE: E. Dumrese START DATE: 3/24/2010 END DATE: 3/24/2010

TYPE OF DRILL RIG: Track Mounted Geoprobe Model 6610DT
AUGER SIZE AND TYPE: NA
OVERBURDEN SAMPLING METHOD: Direct Push
DRIVE SAMPLER TYPE: 4-foot Macrocore
INSIDE DIAMETER: ~1.8-Inch
OTHER:

DEPTH	SAMPLE NO. AND DEPTH	SAMPLE RECOVERY	STRATA CHANGE	VISUAL CLASSIFICATION	PID FIELD SCREEN (PPM)	LUDLUM FIELD SCREEN (µREM/H)
0	S-1 0' to 4'	2.4'	0.0'	Concrete		
			0.3'	Brown, mc SAND and GRAVEL, moist, no odor	0.6	11
2					6.2	
4	S-2 4' - 8'	0.6'	4.0'	As above, wet @ ~4.0' BGS, no odor	0.0	13
				Refusal @ ~5.0' BGS		
6						
8						
10						
12						
14						
16						
18						

WATER LEVEL DATA			BOTTOM OF CASING	BOTTOM OF BORING	GROUNDWATER ENCOUNTERED
DATE	TIME	ELAPSED TIME			
				5.0'	4.0'

NOTES:

GENERAL NOTES
1) STRATIFICATION LINES REPRESENT APPROXIMATE BOUNDARY BETWEEN SOIL TYPES, TRANSITIONS MAY BE GRADUAL.
2) WATER LEVEL READINGS HAVE BEEN MADE AT TIMES AND UNDER CONDITIONS STATED, FLUCTUATIONS OF GROUNDWATER
3) Abbreviations
and = 35 to 50 %
some = 20 to 35%
little = 10 to 20%
trace = 1 to 10%
c = coarse
m = medium
f = fine
vf = very fine
BGS = Below the Ground Surface
NA = Not Applicable

BORING: **SB-15**

LABELLA Associates, P.C.

300 STATE STREET, ROCHESTER, NY
ENVIRONMENTAL ENGINEERING CONSULTANTS

PROJECT
690 Saint Paul Street
Rochester, New York
BCP Site #C828159

BORING: SB-16
SHEET 1 OF
JOB: 209280
CHKD BY: ED

CONTRACTOR: Nothnagle Drilling, Inc. BORING LOCATION: TIME: TO
DRILLER: J. Swytzer GROUND SURFACE ELEVATION: DATUM:
LABELLA REPRESENTATIVE: E. Dumrese START DATE: 3/24/2010 END DATE: 3/24/2010

TYPE OF DRILL RIG: Track Mounted Geoprobe Model 6610DT
AUGER SIZE AND TYPE: NA
OVERBURDEN SAMPLING METHOD: Direct Push
DRIVE SAMPLER TYPE: 4-foot Macrocore
INSIDE DIAMETER: ~1.8-Inch
OTHER:

DEPTH	SAMPLE NO. AND DEPTH	SAMPLE RECOVERY	STRATA CHANGE	VISUAL CLASSIFICATION	PID FIELD SCREEN (PPM)	LUDLUM FIELD SCREEN (µREM/H)
0	S-1 0' to 4'	0.8'	0.0'	Topsoi/Grass		
			0.3'	Light brown, mc SAND and c GRAVEL, moist, no odor	0.2	13
2					0.0	
				Bottom @ ~3.0' BGS		
4						
6						
8						
10						
12						
14						
16						
18						

WATER LEVEL DATA			BOTTOM OF CASING	BOTTOM OF BORING	GROUNDWATER ENCOUNTERED
DATE	TIME	ELAPSED TIME			
				3.0'	No

NOTES:

GENERAL NOTES
1) STRATIFICATION LINES REPRESENT APPROXIMATE BOUNDARY BETWEEN SOIL TYPES, TRANSITIONS MAY BE GRADUAL.
2) WATER LEVEL READINGS HAVE BEEN MADE AT TIMES AND UNDER CONDITIONS STATED, FLUCTUATIONS OF GROUNDWATER
3) Abbreviations
and = 35 to 50 %
some = 20 to 35%
little = 10 to 20%
trace = 1 to 10%
c = coarse
m = medium
f = fine
vf = very fine
BGS = Below the Ground Surface
NA = Not Applicable

BORING: SB-16

LABELLA Associates, P.C.

300 STATE STREET, ROCHESTER, NY
ENVIRONMENTAL ENGINEERING CONSULTANTS

PROJECT
690 Saint Paul Street
Rochester, New York
BCP Site #C828159

BORING: SB-17
SHEET 1 OF
JOB: 209280
CHKD BY: ED

CONTRACTOR: Nothnagle Drilling, Inc. BORING LOCATION: TIME: TO
DRILLER: J. Swytzer GROUND SURFACE ELEVATION: DATUM:
LABELLA REPRESENTATIVE: E. Dumrese START DATE: 3/24/2010 END DATE: 3/24/2010

TYPE OF DRILL RIG: Track Mounted Geoprobe Model 6610DT
AUGER SIZE AND TYPE: NA
OVERBURDEN SAMPLING METHOD: Direct Push
DRIVE SAMPLER TYPE: 4-foot Macrocore
INSIDE DIAMETER: ~1.8-Inch
OTHER:

DEPTH	SAMPLE NO. AND DEPTH	SAMPLE RECOVERY	STRATA CHANGE	VISUAL CLASSIFICATION	PID FIELD SCREEN (PPM)	LUDLUM FIELD SCREEN (µREM/H)
0	S-1 0' to 4'	2.5'	0.0'	Topsoi/Grass		
			0.8'	Brown, mc SAND, some Silt and Gravel, moist, no odor	1.9	13
2					0.0	
4				*Bottom @ ~4.0' BGS*		
6						
8						
10						
12						
14						
16						
18						

WATER LEVEL DATA			BOTTOM OF CASING	BOTTOM OF BORING	GROUNDWATER ENCOUNTERED
DATE	TIME	ELAPSED TIME			
				4.0'	No

NOTES:

GENERAL NOTES
1) STRATIFICATION LINES REPRESENT APPROXIMATE BOUNDARY BETWEEN SOIL TYPES, TRANSITIONS MAY BE GRADUAL.
2) WATER LEVEL READINGS HAVE BEEN MADE AT TIMES AND UNDER CONDITIONS STATED, FLUCTUATIONS OF GROUNDWATER
3) Abbreviations
and = 35 to 50 %
some = 20 to 35%
little = 10 to 20%
trace = 1 to 10%
c = coarse
m = medium
f = fine
vf = very fine
BGS = Below the Ground Surface
NA = Not Applicable

BORING: SB-17

LABELLA Associates, P.C.

300 STATE STREET, ROCHESTER, NY
ENVIRONMENTAL ENGINEERING CONSULTANTS

PROJECT
690 Saint Paul Street
Rochester, New York
BCP Site #C828159

BORING: SB-18
SHEET 1 OF
JOB: 209280
CHKD BY: ED

CONTRACTOR: Nothnagle Drilling, Inc. BORING LOCATION: TIME: TO
DRILLER: J. Swytzer GROUND SURFACE ELEVATION: DATUM:
LABELLA REPRESENTATIVE: E. Dumrese START DATE: 3/24/2010 END DATE: 3/24/2010

TYPE OF DRILL RIG: Track Mounted Geoprobe Model 6610DT
AUGER SIZE AND TYPE: NA
OVERBURDEN SAMPLING METHOD: Direct Push
DRIVE SAMPLER TYPE: 4-foot Macrocore
INSIDE DIAMETER: ~1.8-Inch
OTHER:

DEPTH	SAMPLE NO. AND DEPTH	SAMPLE RECOVERY	STRATA CHANGE	VISUAL CLASSIFICATION	PID FIELD SCREEN (PPM)	LUDLUM FIELD SCREEN (µREM/H)
0	S-1 0' to 4'	3.5'	0.0'	Topsoi/Grass		
			0.8'	Brown, mc SAND, little Silt and Gravel, moist, no odor	0.0	19
2					22.1	
4	S-2 4' - 8'	3.1'	4.0'	As above, moist, slight odor	34.3	22
				Bottom @ ~4.7' BGS		
6					29.2	
8						
10						
12						
14						
16						
18						

WATER LEVEL DATA			BOTTOM OF CASING	BOTTOM OF BORING	GROUNDWATER ENCOUNTERED
DATE	TIME	ELAPSED TIME			
				4.7'	No

NOTES:

GENERAL NOTES
1) STRATIFICATION LINES REPRESENT APPROXIMATE BOUNDARY BETWEEN SOIL TYPES, TRANSITIONS MAY BE GRADUAL.
2) WATER LEVEL READINGS HAVE BEEN MADE AT TIMES AND UNDER CONDITIONS STATED, FLUCTUATIONS OF GROUNDWATER
3) Abbreviations
and = 35 to 50 %
some = 20 to 35%
little = 10 to 20%
trace = 1 to 10%
c = coarse
m = medium
f = fine
vf = very fine
BGS = Below the Ground Surface
NA = Not Applicable

BORING: SB-18

LABELLA Associates, P.C.

300 STATE STREET, ROCHESTER, NY
ENVIRONMENTAL ENGINEERING CONSULTANTS

PROJECT
690 Saint Paul Street
Rochester, New York
BCP Site #C828159

BORING: SB-19
SHEET 1 OF
JOB: 209280
CHKD BY: ED

CONTRACTOR: Nothnagle Drilling, Inc. BORING LOCATION: TIME: TO
DRILLER: J. Swytzer GROUND SURFACE ELEVATION: DATUM:
LABELLA REPRESENTATIVE: E. Dumrese START DATE: 4/2/2010 END DATE: 4/2/2010

TYPE OF DRILL RIG: Track Mounted Geoprobe Model 6610DT
AUGER SIZE AND TYPE: NA
OVERBURDEN SAMPLING METHOD: Direct Push
DRIVE SAMPLER TYPE: 4-foot Macrocore
INSIDE DIAMETER: ~1.8-Inch
OTHER:

DEPTH	SAMPLE NO. AND DEPTH	SAMPLE RECOVERY	STRATA CHANGE	VISUAL CLASSIFICATION	PID FIELD SCREEN (PPM)	LUDLUM FIELD SCREEN (µREM/H)
0	S-1 0' to 4'	1.4'	0.0'	Topsoi/Grass		
			0.6'	Brown, mc SAND, little Silt and c Gravel, moist, no odor	0.0	13
2					0.1	
4	S-2 4' - 8'	3.8'	4.0'	As above, moist, no oor	0.0	19
6					0.0	13
8	S-3 8' - 12'	1.8'	8.0'	Gray, mc SAND and c GRAVEL, saturated, petroleum odor, sheen present	1.8	
10				*Refusal @ ~10.8' BGS*		
12						
14						
16						
18						

WATER LEVEL DATA			BOTTOM OF CASING	BOTTOM OF BORING	GROUNDWATER ENCOUNTERED
DATE	TIME	ELAPSED TIME			
				10.8'	8.0'

NOTES:

GENERAL NOTES
1) STRATIFICATION LINES REPRESENT APPROXIMATE BOUNDARY BETWEEN SOIL TYPES, TRANSITIONS MAY BE GRADUAL.
2) WATER LEVEL READINGS HAVE BEEN MADE AT TIMES AND UNDER CONDITIONS STATED, FLUCTUATIONS OF GROUNDWATER
3) Abbreviations
and = 35 to 50 %
some = 20 to 35%
little = 10 to 20%
trace = 1 to 10%
c = coarse
m = medium
f = fine
vf = very fine
BGS = Below the Ground Surface
NA = Not Applicable

BORING: SB-19

LABELLA Associates, P.C.

300 STATE STREET, ROCHESTER, NY
ENVIRONMENTAL ENGINEERING CONSULTANTS

PROJECT
690 Saint Paul Street
Rochester, New York
BCP Site #C828159

BORING: SB-20
SHEET 1 OF
JOB: 209280
CHKD BY: ED

CONTRACTOR: Nothnagle Drilling, Inc. BORING LOCATION: TIME: TO
DRILLER: J. Swytzer GROUND SURFACE ELEVATION: DATUM:
LABELLA REPRESENTATIVE: E. Dumrese START DATE: 3/24/2010 END DATE: 3/24/2010

TYPE OF DRILL RIG: Track Mounted Geoprobe Model 6610DT
AUGER SIZE AND TYPE: NA
OVERBURDEN SAMPLING METHOD: Direct Push
DRIVE SAMPLER TYPE: 4-foot Macrocore
INSIDE DIAMETER: ~1.8-Inch
OTHER:

DEPTH	SAMPLE NO. AND DEPTH	SAMPLE RECOVERY	STRATA CHANGE	VISUAL CLASSIFICATION	PID FIELD SCREEN (PPM)	LUDLUM FIELD SCREEN (µREM/H)
0	S-1 0' to 4'	3.1'	0.0'	Topsoi/Grass		
			0.3'	Brown, mc SAND, little Silt and c Gravel, moist, no odor	0.0	20
2					0.3	
4	S-2 4' - 8'	1.9'	4.0'	As above, moist, no oor	0.0	16
			5.8'	Black, stained, mf SAND, slight petroleum odor		
6			6.2'	Brown to gray, mf SAND, some Gravel, moist, no odor	1.6	
				Bottom @ 6.5' BGS		
8						
10						
12						
14						
16						
18						

WATER LEVEL DATA			BOTTOM OF CASING	BOTTOM OF BORING	GROUNDWATER ENCOUNTERED
DATE	TIME	ELAPSED TIME			
				6.5'	No

NOTES:

GENERAL NOTES
1) STRATIFICATION LINES REPRESENT APPROXIMATE BOUNDARY BETWEEN SOIL TYPES, TRANSITIONS MAY BE GRADUAL.
2) WATER LEVEL READINGS HAVE BEEN MADE AT TIMES AND UNDER CONDITIONS STATED, FLUCTUATIONS OF GROUNDWATER
3) Abbreviations
and = 35 to 50 %
some = 20 to 35%
little = 10 to 20%
trace = 1 to 10%
c = coarse
m = medium
f = fine
vf = very fine
BGS = Below the Ground Surface
NA = Not Applicable

BORING: SB-20

LABELLA Associates, P.C.

300 STATE STREET, ROCHESTER, NY
ENVIRONMENTAL ENGINEERING CONSULTANTS

PROJECT
690 Saint Paul Street
Rochester, New York
BCP Site #C828159

BORING: SB-21
SHEET 1 OF
JOB: 209280
CHKD BY: ED

CONTRACTOR: Nothnagle Drilling, Inc. BORING LOCATION: TIME: TO
DRILLER: J. Swytzer GROUND SURFACE ELEVATION: DATUM:
LABELLA REPRESENTATIVE: E. Dumrese START DATE: 4/2/2010 END DATE: 4/2/2010

TYPE OF DRILL RIG: Track Mounted Geoprobe Model 6610DT
AUGER SIZE AND TYPE: NA
OVERBURDEN SAMPLING METHOD: Direct Push
DRIVE SAMPLER TYPE: 4-foot Macrocore
INSIDE DIAMETER: ~1.8-Inch
OTHER:

DEPTH	SAMPLE NO. AND DEPTH	SAMPLE RECOVERY	STRATA CHANGE	VISUAL CLASSIFICATION	PID FIELD SCREEN (PPM)	LUDLUM FIELD SCREEN (µREM/H)
0	S-1 0' to 4'	1.9'	0.0'	Topsoi/Grass		
			0.3'	Brown, mc SAND, some Silt and c Gravel, moist, no odor	0.0	30
2					0.0	
4	S-2 4' - 8'	3.4'	4.0'	As above, moist, no odor	0.0	18
6					0.0	
			7.2'	**NATIVE SOIL** Gray to brown, mc SAND, some Silt, moist		
				Bottom @ ~7.5' BGS		
8						
10						
12						
14						
16						
18						

WATER LEVEL DATA			BOTTOM OF CASING	BOTTOM OF BORING	GROUNDWATER ENCOUNTERED
DATE	TIME	ELAPSED TIME			
				7.5'	No

NOTES:

GENERAL NOTES
1) STRATIFICATION LINES REPRESENT APPROXIMATE BOUNDARY BETWEEN SOIL TYPES, TRANSITIONS MAY BE GRADUAL.
2) WATER LEVEL READINGS HAVE BEEN MADE AT TIMES AND UNDER CONDITIONS STATED, FLUCTUATIONS OF GROUNDWATER
3) Abbreviations
and = 35 to 50 %
some = 20 to 35%
little = 10 to 20%
trace = 1 to 10%
c = coarse
m = medium
f = fine
vf = very fine
BGS = Below the Ground Surface
NA = Not Applicable

BORING: SB-21

LABELLA Associates, P.C.

300 STATE STREET, ROCHESTER, NY
ENVIRONMENTAL ENGINEERING CONSULTANTS

PROJECT
690 Saint Paul Street
Rochester, New York
BCP Site #C828159

BORING: SB-22
SHEET 1 OF
JOB: 209280
CHKD BY: ED

CONTRACTOR: Nothnagle Drilling, Inc. BORING LOCATION: TIME: TO
DRILLER: J. Swytzer GROUND SURFACE ELEVATION: DATUM:
LABELLA REPRESENTATIVE: E. Dumrese START DATE: 6/22/2010 END DATE: 6/22/10

TYPE OF DRILL RIG: Track Mounted Geoprobe Model 6610DT
AUGER SIZE AND TYPE: NA
OVERBURDEN SAMPLING METHOD: Direct Push
DRIVE SAMPLER TYPE: 4-foot Macrocore
INSIDE DIAMETER: ~1.8-Inch
OTHER:

DEPTH	SAMPLE NO AND DEPTH	SAMPLE RECOVERY	STRATA CHANGE	VISUAL CLASSIFICATION	PID FIELD SCREEN (PPM)	LUDLUM FIELD SCREEN (µREM/H)
0	S-1 0' to 4'	1.9'	0.0'	Asphalt		
			0.3'	**FILL MATERIALS** C&D debris, some foundry sand, dry, no odor	0.0	13
2					0.0	82
				Refusal @ ~3.2' BGS		
4						
6						
8						
10						
12						
14						
16						
18						

WATER LEVEL DATA			BOTTOM OF CASING	BOTTOM OF BORING	GROUNDWATER ENCOUNTERED
DATE	TIME	ELAPSED TIME			
				3.2'	No

NOTES:

GENERAL NOTES
1) STRATIFICATION LINES REPRESENT APPROXIMATE BOUNDARY BETWEEN SOIL TYPES, TRANSITIONS MAY BE GRADUAL.
2) WATER LEVEL READINGS HAVE BEEN MADE AT TIMES AND UNDER CONDITIONS STATED, FLUCTUATIONS OF GROUNDWATER
3) Abbreviations
and = 35 to 50 %
some = 20 to 35%
little = 10 to 20%
trace = 1 to 10%
c = coarse
m = medium
f = fine
vf = very fine
BGS = Below the Ground Surface
NA = Not Applicable

BORING: SB-22

LABELLA Associates, P.C.

300 STATE STREET, ROCHESTER, NY
ENVIRONMENTAL ENGINEERING CONSULTANTS

PROJECT
690 Saint Paul Street
Rochester, New York
BCP Site #C828159

BORING: SB-23
SHEET 1 OF
JOB: 209280
CHKD BY: ED

CONTRACTOR: Nothnagle Drilling, Inc. BORING LOCATION: TIME: 1030 TO 1100
DRILLER: J. Swytzer GROUND SURFACE ELEVATION: DATUM:
LABELLA REPRESENTATIVE: E. Dumrese START DATE: 6/22/2010 END DATE: 6/22/10

TYPE OF DRILL RIG: Track Mounted Geoprobe Model 6610DT DRIVE SAMPLER TYPE: 4-foot Macrocore
AUGER SIZE AND TYPE: NA INSIDE DIAMETER: ~1.8-Inch
OVERBURDEN SAMPLING METHOD: Direct Push OTHER:

DEPTH	SAMPLE NO. AND DEPTH	SAMPLE RECOVERY	STRATA CHANGE	VISUAL CLASSIFICATION	PID FIELD SCREEN (PPM)	LUDLUM FIELD SCREEN (µREM/H)
0	S-1 0' to 4'	2.5'	0.0'	Asphalt		
			0.3'	**FILL MATERIALS** Black, Cinders, Coals, Crushed Gravel, moist, no odor	0.0	11
2					0.0	13
4	S-2 4' - 8'	2.0'	4.0'	Light brown, mf SAND and SILT, moist, no odor	0.0	12
			4.2'	Concrete Refusal		
				Concrete Refusal @ ~4.2 BGS		
6						
8						
10						
12						
14						
16						
18						

WATER LEVEL DATA			BOTTOM OF	BOTTOM OF	GROUNDWATER
DATE	TIME	ELAPSED TIME	CASING	BORING	ENCOUNTERED
				4.2'	No

NOTES:

GENERAL NOTES
1) STRATIFICATION LINES REPRESENT APPROXIMATE BOUNDARY BETWEEN SOIL TYPES, TRANSITIONS MAY BE GRADUAL.
2) WATER LEVEL READINGS HAVE BEEN MADE AT TIMES AND UNDER CONDITIONS STATED, FLUCTUATIONS OF GROUNDWATER
3) Abbreviations
and = 35 to 50 % c = coarse
some = 20 to 35% m = medium BGS = Below the Ground Surface
little = 10 to 20% f = fine NA = Not Applicable
trace = 1 to 10% vf = very fine

BORING: SB-23

LABELLA Associates, P.C.

300 STATE STREET, ROCHESTER, NY
ENVIRONMENTAL ENGINEERING CONSULTANTS

PROJECT
690 Saint Paul Street
Rochester, New York
BCP Site #C828159

BORING: SB-24
SHEET 1 OF
JOB: 209280
CHKD BY: ED

CONTRACTOR: Nothnagle Drilling, Inc. BORING LOCATION: TIME: TO
DRILLER: J. Swytzer GROUND SURFACE ELEVATION: DATUM:
LABELLA REPRESENTATIVE: E. Dumrese START DATE: 9/22/2010 END DATE: 9/22/10

TYPE OF DRILL RIG: Track Mounted Geoprobe Model 6610DT
AUGER SIZE AND TYPE: NA
OVERBURDEN SAMPLING METHOD: Direct Push
DRIVE SAMPLER TYPE: 4-foot Macrocore
INSIDE DIAMETER: ~1.8-Inch
OTHER:

DEPTH	SAMPLE NO AND DEPTH	SAMPLE RECOVERY	STRATA CHANGE	VISUAL CLASSIFICATION	PID FIELD SCREEN (PPM)	LUDLUM FIELD SCREEN (µREM/H)
0	S-1 0' to 4'	3.8'	0.0'	Asphalt		
			0.4'	**FILL MATERIALS** Black, Cinders, Coals, Crushed Gravel, Foundry Sand, moist, no odor	0.0	66
2					0.0	35
				Refusal @ ~3.5' BGS		
4	S-2 4' - 8'					
6						
8	S-3 8' - 12'					
10						
12						
14						
16						
18						

WATER LEVEL DATA			BOTTOM OF CASING	BOTTOM OF BORING	GROUNDWATER ENCOUNTERED
DATE	TIME	ELAPSED TIME			
				3.5'	No

NOTES:

GENERAL NOTES
1) STRATIFICATION LINES REPRESENT APPROXIMATE BOUNDARY BETWEEN SOIL TYPES, TRANSITIONS MAY BE GRADUAL.
2) WATER LEVEL READINGS HAVE BEEN MADE AT TIMES AND UNDER CONDITIONS STATED, FLUCTUATIONS OF GROUNDWATER
3) Abbreviations
and = 35 to 50 %
some = 20 to 35%
little = 10 to 20%
trace = 1 to 10%
c = coarse
m = medium
f = fine
vf = very fine
BGS = Below the Ground Surface
NA = Not Applicable

BORING: SB-24

LABELLA Associates, P.C.

300 STATE STREET, ROCHESTER, NY
ENVIRONMENTAL ENGINEERING CONSULTANTS

PROJECT
690 Saint Paul Street
Rochester, New York
BCP Site #C828159

BORING: SB-25
SHEET 1 OF
JOB: 209280
CHKD BY: ED

CONTRACTOR: Nothnagle Drilling, Inc. BORING LOCATION: TIME: 830 TO 900
DRILLER: J. Swytzer GROUND SURFACE ELEVATION: DATUM:
LABELLA REPRESENTATIVE: E. Dumrese START DATE: 9/22/2010 END DATE: 9/22/10

TYPE OF DRILL RIG: Track Mounted Geoprobe Model 6610DT
AUGER SIZE AND TYPE: NA
OVERBURDEN SAMPLING METHOD: Direct Push
DRIVE SAMPLER TYPE: 4-foot Macrocore
INSIDE DIAMETER: ~1.8-Inch
OTHER:

DEPTH	SAMPLE NO AND DEPTH	SAMPLE RECOVERY	STRATA CHANGE	VISUAL CLASSIFICATION	PID FIELD SCREEN (PPM)	LUDLUM FIELD SCREEN (µREM/H)
0	S-1 0' to 4'	2.4'	0.0'	Asphalt	0.0	20
			0.5'	**FILL MATERIALS** Black, Cinders, Coals, Crushed Gravel, moist, no odor		
2					0.0	35
4	S-2 4' - 8'	3.4'	4.0'	As above, moist, no odor	0.0	40
6			7.5'	**NATIVE SOIL** Light brown, mc SAND and SILT, wet @ ~7.8' BGS	0.0	25
8	S-3 8' - 12'	3.3'	8.0'	As above, wet, no odor	0.0	30
10				*Refusal @ ~10.7 BGS*	0.0	20
12						
14						
16						
18						

WATER LEVEL DATA			BOTTOM OF CASING	BOTTOM OF BORING	GROUNDWATER ENCOUNTERED
DATE	TIME	ELAPSED TIME			
				10.7'	7.8'

NOTES:

GENERAL NOTES
1) STRATIFICATION LINES REPRESENT APPROXIMATE BOUNDARY BETWEEN SOIL TYPES, TRANSITIONS MAY BE GRADUAL.
2) WATER LEVEL READINGS HAVE BEEN MADE AT TIMES AND UNDER CONDITIONS STATED, FLUCTUATIONS OF GROUNDWATER
3) Abbreviations

and = 35 to 50 %	c = coarse	
some = 20 to 35%	m = medium	BGS = Below the Ground Surface
little = 10 to 20%	f = fine	NA = Not Applicable
trace = 1 to 10%	vf = very fine	

BORING: SB-25

LABELLA Associates, P.C.

300 STATE STREET, ROCHESTER, NY
ENVIRONMENTAL ENGINEERING CONSULTANTS

PROJECT
690 Saint Paul Street
Rochester, New York
BCP Site #C828159

BORING: **SB-26**
SHEET 1 OF
JOB: **209280**
CHKD BY: ED

CONTRACTOR: Nothnagle Drilling, Inc. BORING LOCATION: TIME: 1100 TO 1130
DRILLER: J. Swytzer GROUND SURFACE ELEVATION: DATUM:
LABELLA REPRESENTATIVE: E. Dumrese START DATE: 6/24/2010 END DATE: 6/24/10

TYPE OF DRILL RIG: Track Mounted Geoprobe Model 6610DT
AUGER SIZE AND TYPE: NA
OVERBURDEN SAMPLING METHOD: Direct Push
DRIVE SAMPLER TYPE: 4-foot Macrocore
INSIDE DIAMETER: ~1.8-Inch
OTHER:

DEPTH	SAMPLE NO. AND DEPTH	SAMPLE RECOVERY	STRATA CHANGE	VISUAL CLASSIFICATION	PID FIELD SCREEN (PPM)	LUDLUM FIELD SCREEN (µREM/H)
0	S-1 0' to 4'	2.3.	0.0'	Asphalt		7
			0.3.	**FILL MATERIALS** Crushed brick, cinders, coals, crushed stone, moist, no odor	0.0	
2					0.0	12
4	S-2 4' - 8'	2.9.	4.0'	As above, moist, no odor	0.0	9
6				**NATIVE SOIL**	0.0	9
			6.8'	Dark brown to grey, SILT and mf SAND, moist, no odor		
8	S-3 8' - 12'	3.1.	8.0'	As above, moist, no odor	0.0	12
			9.8'	Brown, SILT, some Gravel, wet, no odor		
10					1,359	14
				Refusal @ 11.3' BGS		
12						
14						
16						
18						

WATER LEVEL DATA			BOTTOM OF CASING	BOTTOM OF BORING	GROUNDWATER ENCOUNTERED
DATE	TIME	ELAPSED TIME			
				11.3'	9.8'

NOTES:

GENERAL NOTES
1) STRATIFICATION LINES REPRESENT APPROXIMATE BOUNDARY BETWEEN SOIL TYPES, TRANSITIONS MAY BE GRADUAL.
2) WATER LEVEL READINGS HAVE BEEN MADE AT TIMES AND UNDER CONDITIONS STATED, FLUCTUATIONS OF GROUNDWATER
3) Abbreviations and = 35 to 50 % c = coarse
some = 20 to 35% m = medium BGS = Below the Ground Surface
little = 10 to 20% f = fine NA = Not Applicable
trace = 1 to 10% vf = very fine

BORING: **SB-26**

LABELLA Associates, P.C.

300 STATE STREET, ROCHESTER, NY
ENVIRONMENTAL ENGINEERING CONSULTANTS

PROJECT
690 Saint Paul Street
Rochester, New York
BCP Site #C828159

BORING: SB-27
SHEET 1 OF
JOB: 209280
CHKD BY: ED

CONTRACTOR: Nothnagle Drilling, Inc. BORING LOCATION: TIME: 805 TO 845
DRILLER: J. Swytzer GROUND SURFACE ELEVATION: DATUM:
LABELLA REPRESENTATIVE: E. Dumrese START DATE: 9/22/2010 END DATE: 9/22/10

TYPE OF DRILL RIG: Track Mounted Geoprobe Model 6610DT
AUGER SIZE AND TYPE: NA
OVERBURDEN SAMPLING METHOD: Direct Push
DRIVE SAMPLER TYPE: 4-foot Macrocore
INSIDE DIAMETER: ~1.8-Inch
OTHER:

DEPTH	SAMPLE NO AND DEPTH	SAMPLE RECOVERY	STRATA CHANGE	VISUAL CLASSIFICATION	PID FIELD SCREEN (PPM)	LUDLUM FIELD SCREEN (µREM/H)
0	S-1 0' to 4'	2.1'	0.0'	Asphalt	0.0	40
			0.3.	**FILL MATERIALS** Light brown, mc SAND and crushed brick, moist, no odor		
2					0.0	33
4	S-2 4' - 8'	2.3'	4.0'	Light brown, mc SAND, some Silt, moist, no odor	0.0	20
6					0.0	30
			7.3'	As above, wet @ ~7.3' BGS, no odor		
8	S-3 8' - 12'	2.5'	8.0'	As above, wet, no odor	107.0	35
				NATIVE SOIL (GLACIAL TILL)		
10			10.5'	Light brown, SILT, some mf Sand and gravel, moist, petroleum odor	113	20
				Refusal @ ~11.5' BGS		
12						
14						
16						
18						

WATER LEVEL DATA			BOTTOM OF	BOTTOM OF	GROUNDWATER
DATE	TIME	ELAPSED TIME	CASING	BORING	ENCOUNTERED
				11.5'	7.3'

NOTES:

GENERAL NOTES
1) STRATIFICATION LINES REPRESENT APPROXIMATE BOUNDARY BETWEEN SOIL TYPES, TRANSITIONS MAY BE GRADUAL.
2) WATER LEVEL READINGS HAVE BEEN MADE AT TIMES AND UNDER CONDITIONS STATED, FLUCTUATIONS OF GROUNDWATER
3) Abbreviations
and = 35 to 50 %
some = 20 to 35%
little = 10 to 20%
trace = 1 to 10%
c = coarse
m = medium
f = fine
vf = very fine
BGS = Below the Ground Surface
NA = Not Applicable

BORING: SB-27

LABELLA Associates, P.C.

300 STATE STREET, ROCHESTER, NY
ENVIRONMENTAL ENGINEERING CONSULTANTS

PROJECT
690 Saint Paul Street
Rochester, New York
BCP Site #C828159

BORING: SB-28
SHEET 1 OF
JOB: 209280
CHKD BY: ED

CONTRACTOR: Nothnagle Drilling, Inc. BORING LOCATION: TIME: 1100 TO 1130
DRILLER: J. Swytzer GROUND SURFACE ELEVATION: DATUM:
LABELLA REPRESENTATIVE: E. Dumrese START DATE: 6/24/2010 END DATE: 6/24/10

TYPE OF DRILL RIG: Track Mounted Geoprobe Model 6610DT DRIVE SAMPLER TYPE: 4-foot Macrocore
AUGER SIZE AND TYPE: NA INSIDE DIAMETER: ~1.8-Inch
OVERBURDEN SAMPLING METHOD: Direct Push OTHER:

DEPTH	SAMPLE NO. AND DEPTH	SAMPLE RECOVERY	STRATA CHANGE	VISUAL CLASSIFICATION	PID FIELD SCREEN (PPM)	LUDLUM FIELD SCREEN (µREM/H)
0	S-1 0' to 4'	3.2'	0.0'	Asphalt		18
			0.3.	**FILL MATERIALS** Crushed brick, cinders, coals, crushed stone, moist, no odor	0.0	
2					0.0	12
				NATIVE SOIL		
4	S-2 4' - 8'	4.0'	4.0'	Light brown, mf SAND and SILT, moist, no odor	0.0	9
6					0.0	13
8	S-3 8' - 12'	2.8'	8.0'	As above, moist, no odor	0.0	11
			9.3'	as above, wet, no odor		
10				*Refusal @ ~10.4' BGS*		
12						
14						
16						
18						

WATER LEVEL DATA			BOTTOM OF	BOTTOM OF	GROUNDWATER
DATE	TIME	ELAPSED TIME	CASING	BORING	ENCOUNTERED
				10.4'	9.3'

NOTES:

GENERAL NOTES
1) STRATIFICATION LINES REPRESENT APPROXIMATE BOUNDARY BETWEEN SOIL TYPES, TRANSITIONS MAY BE GRADUAL.
2) WATER LEVEL READINGS HAVE BEEN MADE AT TIMES AND UNDER CONDITIONS STATED, FLUCTUATIONS OF GROUNDWATER
3) Abbreviations
and = 35 to 50 % c = coarse
some = 20 to 35% m = medium BGS = Below the Ground Surface
little = 10 to 20% f = fine NA = Not Applicable
trace = 1 to 10% vf = very fine

BORING: SB-28

LABELLA Associates, P.C.

300 STATE STREET, ROCHESTER, NY
ENVIRONMENTAL ENGINEERING CONSULTANTS

PROJECT
690 Saint Paul Street
Rochester, New York
BCP Site #C828159

BORING: SB-29
SHEET 1 OF
JOB: 209280
CHKD BY: ED

CONTRACTOR: Nothnagle Drilling, Inc. BORING LOCATION: TIME: 1100 TO 1130
DRILLER: J. Swytzer GROUND SURFACE ELEVATION: DATUM:
LABELLA REPRESENTATIVE: E. Dumrese START DATE: 9/24/2010 END DATE: 9/24/10

TYPE OF DRILL RIG: Track Mounted Geoprobe Model 6610DT
AUGER SIZE AND TYPE: NA
OVERBURDEN SAMPLING METHOD: Direct Push
DRIVE SAMPLER TYPE: 4-foot Macrocore
INSIDE DIAMETER: ~1.8-Inch
OTHER:

DEPTH	SAMPLE NO AND DEPTH	SAMPLE RECOVERY	STRATA CHANGE	VISUAL CLASSIFICATION	PID FIELD SCREEN (PPM)	LUDLUM FIELD SCREEN (µREM/H)
0	S-1 0' to 4'	2.7'	0.0'	Asphalt	0.0	52
			0.4'	Light brown, mc SAND, little Silt and c. Gravel, dry, no odor		
2					0.0	46
			3.0'	Pink Sandstone gravel		
			3.3'	Light brown, SILT and CLAY, moist, no odor		
4	S-2 4' - 8'	3.2'	4.0'	As above, moist, no odor	0.0	35
6					0.0	91
			6.4'	Light brown, SILT and mf SAND, moist, no odor		
			7.4'	As above, wet, no odor		
8	S-3 8' - 12'	3.0'	8.0'	As above, wet, no odor	0.0	14
						57
10				*Refusal @ ~10.4' BGS*		
12						
14						
16						
18						

WATER LEVEL DATA			BOTTOM OF	BOTTOM OF	GROUNDWATER
DATE	TIME	ELAPSED TIME	CASING	BORING	ENCOUNTERED
				10.4'	7.4'

NOTES:

GENERAL NOTES
1) STRATIFICATION LINES REPRESENT APPROXIMATE BOUNDARY BETWEEN SOIL TYPES, TRANSITIONS MAY BE GRADUAL.
2) WATER LEVEL READINGS HAVE BEEN MADE AT TIMES AND UNDER CONDITIONS STATED, FLUCTUATIONS OF GROUNDWATER
3) Abbreviations
and = 35 to 50 %
some = 20 to 35%
little = 10 to 20%
trace = 1 to 10%
c = coarse
m = medium
f = fine
vf = very fine
BGS = Below the Ground Surface
NA = Not Applicable

BORING: SB-29

LABELLA Associates, P.C.

300 STATE STREET, ROCHESTER, NY
ENVIRONMENTAL ENGINEERING CONSULTANTS

PROJECT
690 Saint Paul Street
Rochester, New York
BCP Site #C828159

BORING: SB-30
SHEET 1 OF
JOB: 209280
CHKD BY: ED

CONTRACTOR: Nothnagle Drilling, Inc. BORING LOCATION: TIME: 830 TO 900
DRILLER: J. Swytzer GROUND SURFACE ELEVATION: DATUM:
LABELLA REPRESENTATIVE: E. Dumrese START DATE: 9/24/2010 END DATE: 9/24/10

TYPE OF DRILL RIG: Track Mounted Geoprobe Model 6610DT
AUGER SIZE AND TYPE: NA
OVERBURDEN SAMPLING METHOD: Direct Push
DRIVE SAMPLER TYPE: 4-foot Macrocore
INSIDE DIAMETER: ~1.8-Inch
OTHER:

DEPTH	SAMPLE NO AND DEPTH	SAMPLE RECOVERY	STRATA CHANGE	VISUAL CLASSIFICATION	PID FIELD SCREEN (PPM)	LUDLUM FIELD SCREEN (µREM/H)
0	S-1 0' to 4'	3.7'	0.0'	Asphalt	0.0	66
			0.2'	C. Gravel sub-base		
				FILL MATERIALS		
			0.6'	Black, cinders, coals, moist, no odor		
2					0.0	59
			2.1'	Brown, SILT, moist, no odor		
			3.1'	Light brown, SILT and mf SAND, moist, no odor		
4	S-2 4' - 8'	4.0'	4.0'	As above, moist, no odor	0.0	14
				NATIVE SOIL (GLACIAL TILL)		
6			6.1'	Light brown, SILT, some mf Sand and Gravel, wet, no odor	0.0	32
8	S-3 8' - 12'	3.1'	8.0'	As above, saturated, no odor	0.0	38
10				*Refusal @ ~10.7' BGS*		
12						
14						
16						
18						

WATER LEVEL DATA			BOTTOM OF	BOTTOM OF	GROUNDWATER
DATE	TIME	ELAPSED TIME	CASING	BORING	ENCOUNTERED
				10.7'	6.1'

NOTES:

GENERAL NOTES
1) STRATIFICATION LINES REPRESENT APPROXIMATE BOUNDARY BETWEEN SOIL TYPES, TRANSITIONS MAY BE GRADUAL.
2) WATER LEVEL READINGS HAVE BEEN MADE AT TIMES AND UNDER CONDITIONS STATED, FLUCTUATIONS OF GROUNDWATER
3) Abbreviations

and = 35 to 50 %	c = coarse	
some = 20 to 35%	m = medium	BGS = Below the Ground Surface
little = 10 to 20%	f = fine	NA = Not Applicable
trace = 1 to 10%	vf = very fine	

BORING: SB-30

LABELLA Associates, P.C.

300 STATE STREET, ROCHESTER, NY
ENVIRONMENTAL ENGINEERING CONSULTANTS

PROJECT
690 Saint Paul Street
Rochester, New York
BCP Site #C828159

BORING: SB-31
SHEET 1 OF
JOB: 209280
CHKD BY: ED

CONTRACTOR: Nothnagle Drilling, Inc. BORING LOCATION: TIME: TO
DRILLER: J. Swytzer GROUND SURFACE ELEVATION: DATUM:
LABELLA REPRESENTATIVE: E. Dumrese START DATE: 9/28/2010 END DATE: 9/28/10

TYPE OF DRILL RIG: Track Mounted Geoprobe Model 6610DT
AUGER SIZE AND TYPE: NA
OVERBURDEN SAMPLING METHOD: Direct Push
DRIVE SAMPLER TYPE: 4-foot Macrocore
INSIDE DIAMETER: ~1.8-Inch
OTHER:

DEPTH	SAMPLE NO AND DEPTH	SAMPLE RECOVERY	STRATA CHANGE	VISUAL CLASSIFICATION	PID FIELD SCREEN (PPM)	LUDLUM FIELD SCREEN (µREM/H)
0	S-1 0' to 4'	0.8'	0.0'	Concrete	0.0	88
			0.5'	Greyish to brown, SILT, little mf Sand, moist, no odor		
2				*Refusal @ ~1.5' BGS*		
4						
6						
8						
10						
12						
14						
16						
18						

WATER LEVEL DATA			BOTTOM OF CASING	BOTTOM OF BORING	GROUNDWATER ENCOUNTERED
DATE	TIME	ELAPSED TIME			
				1.5'	No

NOTES:

GENERAL NOTES
1) STRATIFICATION LINES REPRESENT APPROXIMATE BOUNDARY BETWEEN SOIL TYPES, TRANSITIONS MAY BE GRADUAL.
2) WATER LEVEL READINGS HAVE BEEN MADE AT TIMES AND UNDER CONDITIONS STATED, FLUCTUATIONS OF GROUNDWATER
3) Abbreviations
and = 35 to 50 %
some = 20 to 35%
little = 10 to 20%
trace = 1 to 10%
c = coarse
m = medium
f = fine
vf = very fine
BGS = Below the Ground Surface
NA = Not Applicable

BORING: SB-31

LABELLA Associates, P.C.

300 STATE STREET, ROCHESTER, NY
ENVIRONMENTAL ENGINEERING CONSULTANTS

PROJECT
690 Saint Paul Street
Rochester, New York
BCP Site #C828159

BORING: SB-32
SHEET 1 OF
JOB: 209280
CHKD BY: ED

CONTRACTOR: Nothnagle Drilling, Inc. BORING LOCATION: TIME: 1320 TO 1345
DRILLER: J. Swytzer GROUND SURFACE ELEVATION: DATUM:
LABELLA REPRESENTATIVE: E. Dumrese START DATE: 6/23/2010 END DATE: 6/23/10

TYPE OF DRILL RIG: Track Mounted Geoprobe Model 6610DT
AUGER SIZE AND TYPE: NA
OVERBURDEN SAMPLING METHOD: Direct Push
DRIVE SAMPLER TYPE: 4-foot Macrocore
INSIDE DIAMETER: ~1.8-Inch
OTHER:

DEPTH	SAMPLE NO. AND DEPTH	SAMPLE RECOVERY	STRATA CHANGE	VISUAL CLASSIFICATION	PID FIELD SCREEN (PPM)	LUDLUM FIELD SCREEN (µREM/H)
0	S-1 0' to 4'	0.8'	0.0'	Concrete	0.0	13
			1.2'	Light brown, SILT and mf SAND, moist, no odor		
2				*Refusal @ ~2.0' BGS*		
4						
6						
8						
10						
12						
14						
16						
18						

WATER LEVEL DATA			BOTTOM OF CASING	BOTTOM OF BORING	GROUNDWATER ENCOUNTERED
DATE	TIME	ELAPSED TIME			
				2.0'	NO

NOTES:

GENERAL NOTES
1) STRATIFICATION LINES REPRESENT APPROXIMATE BOUNDARY BETWEEN SOIL TYPES, TRANSITIONS MAY BE GRADUAL.
2) WATER LEVEL READINGS HAVE BEEN MADE AT TIMES AND UNDER CONDITIONS STATED, FLUCTUATIONS OF GROUNDWATER
3) Abbreviations
and = 35 to 50 %
some = 20 to 35%
little = 10 to 20%
trace = 1 to 10%
c = coarse
m = medium
f = fine
vf = very fine
BGS = Below the Ground Surface
NA = Not Applicable

BORING: SB-32

LABELLA Associates, P.C.

300 STATE STREET, ROCHESTER, NY
ENVIRONMENTAL ENGINEERING CONSULTANTS

PROJECT
690 Saint Paul Street
Rochester, New York
BCP Site #C828159

BORING: **SB-33**
SHEET 1 OF
JOB: **209280**
CHKD BY: ED

CONTRACTOR: Nothnagle Drilling, Inc. BORING LOCATION: TIME: 1340 TO 1400
DRILLER: J. Swytzer GROUND SURFACE ELEVATION: DATUM:
LABELLA REPRESENTATIVE: E. Dumrese START DATE: 6/23/2010 END DATE: 6/23/10

TYPE OF DRILL RIG: Track Mounted Geoprobe Model 6610DT
AUGER SIZE AND TYPE: NA
OVERBURDEN SAMPLING METHOD: Direct Push
DRIVE SAMPLER TYPE: 4-foot Macrocore
INSIDE DIAMETER: ~1.8-Inch
OTHER:

DEPTH	SAMPLE NO. AND DEPTH	SAMPLE RECOVERY	STRATA CHANGE	VISUAL CLASSIFICATION	PID FIELD SCREEN (PPM)	LUDLUM FIELD SCREEN (µREM/H)
0	S-1 0' to 4'	0.9'	0.0'	Concrete		
			0.8'	Apparent bedrock refusal		
				Refusal @ ~0.8' BGS		
2						
4						
6						
8						
10						
12						
14						
16						
18						

WATER LEVEL DATA			BOTTOM OF CASING	BOTTOM OF BORING	GROUNDWATER ENCOUNTERED
DATE	TIME	ELAPSED TIME			
				0.8'	NO

NOTES:

GENERAL NOTES
1) STRATIFICATION LINES REPRESENT APPROXIMATE BOUNDARY BETWEEN SOIL TYPES, TRANSITIONS MAY BE GRADUAL.
2) WATER LEVEL READINGS HAVE BEEN MADE AT TIMES AND UNDER CONDITIONS STATED, FLUCTUATIONS OF GROUNDWATER
3) Abbreviations
and = 35 to 50 %
some = 20 to 35%
little = 10 to 20%
trace = 1 to 10%
c = coarse
m = medium
f = fine
vf = very fine
BGS = Below the Ground Surface
NA = Not Applicable

BORING: **SB-33**

LABELLA Associates, P.C.

300 STATE STREET, ROCHESTER, NY
ENVIRONMENTAL ENGINEERING CONSULTANTS

PROJECT
690 Saint Paul Street
Rochester, New York
BCP Site #C828159

BORING: SB-34
SHEET 1 OF
JOB: 209280
CHKD BY: ED

CONTRACTOR: Nothnagle Drilling, Inc. BORING LOCATION: TIME: 1320 TO 1345
DRILLER: J. Swytzer GROUND SURFACE ELEVATION: DATUM:
LABELLA REPRESENTATIVE: E. Dumrese START DATE: 9/28/2010 END DATE: 9/28/10

TYPE OF DRILL RIG: Track Mounted Geoprobe Model 6610DT
AUGER SIZE AND TYPE: NA
OVERBURDEN SAMPLING METHOD: Direct Push
DRIVE SAMPLER TYPE: 4-foot Macrocore
INSIDE DIAMETER: ~1.8-Inch
OTHER:

DEPTH	SAMPLE NO AND DEPTH	SAMPLE RECOVERY	STRATA CHANGE	VISUAL CLASSIFICATION	PID FIELD SCREEN (PPM)	LUDLUM FIELD SCREEN (µREM/H)
0	S-1 0' to 4'	0.4'	0.0'	Concrete	0.0	29
2			0.6'	Brown, SILT, little mf Sand, moist, no odor *Refusal @ ~1.4' BGS*		
4						
6						
8						
10						
12						
14						
16						
18						

WATER LEVEL DATA			BOTTOM OF	BOTTOM OF	GROUNDWATER
DATE	TIME	ELAPSED TIME	CASING	BORING	ENCOUNTERED
				1.4'	No

NOTES:

GENERAL NOTES
1) STRATIFICATION LINES REPRESENT APPROXIMATE BOUNDARY BETWEEN SOIL TYPES, TRANSITIONS MAY BE GRADUAL.
2) WATER LEVEL READINGS HAVE BEEN MADE AT TIMES AND UNDER CONDITIONS STATED, FLUCTUATIONS OF GROUNDWATER
3) Abbreviations
and = 35 to 50 %
some = 20 to 35%
little = 10 to 20%
trace = 1 to 10%
c = coarse
m = medium
f = fine
vf = very fine
BGS = Below the Ground Surface
NA = Not Applicable

BORING: SB-34

LABELLA Associates, P.C.

300 STATE STREET, ROCHESTER, NY
ENVIRONMENTAL ENGINEERING CONSULTANTS

PROJECT
690 Saint Paul Street
Rochester, New York
BCP Site #C828159

BORING: SB-35
SHEET 1 OF
JOB: 209280
CHKD BY: ED

CONTRACTOR: Nothnagle Drilling, Inc. BORING LOCATION: TIME: 1145 TO 1200
DRILLER: J. Swytzer GROUND SURFACE ELEVATION: DATUM:
LABELLA REPRESENTATIVE: E. Dumrese START DATE: 6/23/2010 END DATE: 6/23/10

TYPE OF DRILL RIG: Track Mounted Geoprobe Model 6610DT DRIVE SAMPLER TYPE: 4-foot Macrocore
AUGER SIZE AND TYPE: NA INSIDE DIAMETER: ~1.8-Inch
OVERBURDEN SAMPLING METHOD: Direct Push OTHER:

DEPTH	SAMPLE NO. AND DEPTH	SAMPLE RECOVERY	STRATA CHANGE	VISUAL CLASSIFICATION	PID FIELD SCREEN (PPM)	LUDLUM FIELD SCREEN (µREM/H)
0	S-1 0' to 4'	2.0'	0.0' 0.6'	Concrete Light brown, SILT, little mf Sand and c Gravel, moist, no odor	0.0	10
2					0.0	19
4				*Refusal @ ~3.9' BGS*		
6						
8						
10						
12						
14						
16						
18						

WATER LEVEL DATA			BOTTOM OF	BOTTOM OF	GROUNDWATER
DATE	TIME	ELAPSED TIME	CASING	BORING	ENCOUNTERED
				3.9'	No

NOTES:

GENERAL NOTES
1) STRATIFICATION LINES REPRESENT APPROXIMATE BOUNDARY BETWEEN SOIL TYPES, TRANSITIONS MAY BE GRADUAL.
2) WATER LEVEL READINGS HAVE BEEN MADE AT TIMES AND UNDER CONDITIONS STATED, FLUCTUATIONS OF GROUNDWATER
3) Abbreviations
and = 35 to 50 % c = coarse
some = 20 to 35% m = medium BGS = Below the Ground Surface
little = 10 to 20% f = fine NA = Not Applicable
trace = 1 to 10% vf = very fine

BORING: SB-35

LABELLA Associates, P.C.

300 STATE STREET, ROCHESTER, NY
ENVIRONMENTAL ENGINEERING CONSULTANTS

PROJECT
690 Saint Paul Street
Rochester, New York
BCP Site #C828159

BORING: **SB-36**
SHEET 1 OF
JOB: **209280**
CHKD BY: ED

CONTRACTOR: Nothnagle Drilling, Inc. BORING LOCATION: TIME: 1130 TO 1145
DRILLER: J. Swytzer GROUND SURFACE ELEVATION: DATUM:
LABELLA REPRESENTATIVE: E. Dumrese START DATE: 6/23/2010 END DATE: 6/23/10

TYPE OF DRILL RIG: Track Mounted Geoprobe Model 6610DT DRIVE SAMPLER TYPE: 4-foot Macrocore
AUGER SIZE AND TYPE: NA INSIDE DIAMETER: ~1.8-Inch
OVERBURDEN SAMPLING METHOD: Direct Push OTHER:

DEPTH	SAMPLE NO. AND DEPTH	SAMPLE RECOVERY	STRATA CHANGE	VISUAL CLASSIFICATION	PID FIELD SCREEN (PPM)	LUDLUM FIELD SCREEN (µREM/H)
0	S-1 0' to 4'	1.6'	0.0'	Concrete	0.0	8
2			2.0'	Light brown, mf SAND, some Silt and c Gravel, moist, no odor	0.0	6
4				*Refusal @ ~3.8' BGS*		
6						
8						
10						
12						
14						
16						
18						

WATER LEVEL DATA			BOTTOM OF CASING	BOTTOM OF BORING	GROUNDWATER ENCOUNTERED
DATE	TIME	ELAPSED TIME			
				3.8'	NO

NOTES:

GENERAL NOTES
1) STRATIFICATION LINES REPRESENT APPROXIMATE BOUNDARY BETWEEN SOIL TYPES, TRANSITIONS MAY BE GRADUAL.
2) WATER LEVEL READINGS HAVE BEEN MADE AT TIMES AND UNDER CONDITIONS STATED, FLUCTUATIONS OF GROUNDWATER
3) Abbreviations and = 35 to 50 % c = coarse
some = 20 to 35% m = medium BGS = Below the Ground Surface
little = 10 to 20% f = fine NA = Not Applicable
trace = 1 to 10% vf = very fine

BORING: **SB-36**

LABELLA Associates, P.C.

300 STATE STREET, ROCHESTER, NY
ENVIRONMENTAL ENGINEERING CONSULTANTS

PROJECT
690 Saint Paul Street
Rochester, New York
BCP Site #C828159

BORING: SB-37
SHEET 1 OF
JOB: 209280
CHKD BY: ED

CONTRACTOR: Nothnagle Drilling, Inc. BORING LOCATION: TIME: TO
DRILLER: J. Swytzer GROUND SURFACE ELEVATION: DATUM:
LABELLA REPRESENTATIVE: E. Dumrese START DATE: 9/28/2010 END DATE: 9/28/10

TYPE OF DRILL RIG: Track Mounted Geoprobe Model 6610DT
AUGER SIZE AND TYPE: NA
OVERBURDEN SAMPLING METHOD: Direct Push
DRIVE SAMPLER TYPE: 4-foot Macrocore
INSIDE DIAMETER: ~1.8-Inch
OTHER:

DEPTH	SAMPLE NO AND DEPTH	SAMPLE RECOVERY	STRATA CHANGE	VISUAL CLASSIFICATION	PID FIELD SCREEN (PPM)	LUDLUM FIELD SCREEN (µREM/H)
0	S-1 0' to 4'	0.6'	0.0'	Concrete	0.0	39
			0.7'	Grey to brown, SILT, little mf Sand, wet, no odor		
				Refusal @ ~ 1.9' BGS		
2					0.0	68
4						
6						
8						
10						
12						
14						
16						
18						

WATER LEVEL DATA			BOTTOM OF CASING	BOTTOM OF BORING	GROUNDWATER ENCOUNTERED
DATE	TIME	ELAPSED TIME			
				1.9'	0.7'

NOTES:

GENERAL NOTES
1) STRATIFICATION LINES REPRESENT APPROXIMATE BOUNDARY BETWEEN SOIL TYPES, TRANSITIONS MAY BE GRADUAL.
2) WATER LEVEL READINGS HAVE BEEN MADE AT TIMES AND UNDER CONDITIONS STATED, FLUCTUATIONS OF GROUNDWATER
3) Abbreviations
and = 35 to 50 %
some = 20 to 35%
little = 10 to 20%
trace = 1 to 10%
c = coarse
m = medium
f = fine
vf = very fine
BGS = Below the Ground Surface
NA = Not Applicable

BORING: SB-37

LABELLA Associates, P.C.

300 STATE STREET, ROCHESTER, NY
ENVIRONMENTAL ENGINEERING CONSULTANTS

PROJECT
690 Saint Paul Street
Rochester, New York
BCP Site #C828159

BORING: **SB-38**
SHEET 1 OF
JOB: **209280**
CHKD BY: ED

CONTRACTOR: Nothnagle Drilling, Inc. BORING LOCATION: TIME: 1200 TO 1220
DRILLER: J. Swytzer GROUND SURFACE ELEVATION: DATUM:
LABELLA REPRESENTATIVE: E. Dumrese START DATE: 6/23/2010 END DATE: 6/23/2010

TYPE OF DRILL RIG: Track Mounted Geoprobe Model 6610DT DRIVE SAMPLER TYPE: 4-foot Macrocore
AUGER SIZE AND TYPE: NA INSIDE DIAMETER: ~1.8-Inch
OVERBURDEN SAMPLING METHOD: Direct Push OTHER:

DEPTH	SAMPLE NO. AND DEPTH	SAMPLE RECOVERY	STRATA CHANGE	VISUAL CLASSIFICATION	PID FIELD SCREEN (PPM)	LUDLUM FIELD SCREEN (µREM/H)
0	S-1 0' to 4'	1.9'	0.0'	Concrete	0.0	6
			0.6'	Light brown, SILT, little mf Sand, moist, no odor		
2						
				Refusal @ ~3.0' BGS		
4						
6						
8						
10						
12						
14						
16						
18						

WATER LEVEL DATA			BOTTOM OF CASING	BOTTOM OF BORING	GROUNDWATER ENCOUNTERED
DATE	TIME	ELAPSED TIME			
				3.0'	No

NOTES:

GENERAL NOTES
1) STRATIFICATION LINES REPRESENT APPROXIMATE BOUNDARY BETWEEN SOIL TYPES, TRANSITIONS MAY BE GRADUAL.
2) WATER LEVEL READINGS HAVE BEEN MADE AT TIMES AND UNDER CONDITIONS STATED, FLUCTUATIONS OF GROUNDWATER
3) Abbreviations
and = 35 to 50 % c = coarse
some = 20 to 35% m = medium BGS = Below the Ground Surface
little = 10 to 20% f = fine NA = Not Applicable
trace = 1 to 10% vf = very fine

BORING: **SB-38**

LABELLA Associates, P.C.

300 STATE STREET, ROCHESTER, NY
ENVIRONMENTAL ENGINEERING CONSULTANTS

PROJECT
690 Saint Paul Street
Rochester, New York
BCP Site #C828159

BORING: SB-39
SHEET 1 OF
JOB: 209280
CHKD BY: ED

CONTRACTOR: Nothnagle Drilling, Inc. BORING LOCATION: TIME: 1330 TO 1400
DRILLER: J. Swytzer GROUND SURFACE ELEVATION: DATUM:
LABELLA REPRESENTATIVE: E. Dumrese START DATE: 9/27/2010 END DATE: 9/27/2010

TYPE OF DRILL RIG: Track Mounted Geoprobe Model 6610DT DRIVE SAMPLER TYPE: 4-foot Macrocore
AUGER SIZE AND TYPE: NA INSIDE DIAMETER: ~1.8-Inch
OVERBURDEN SAMPLING METHOD: Direct Push OTHER:

DEPTH	SAMPLE NO AND DEPTH	SAMPLE RECOVERY	STRATA CHANGE	VISUAL CLASSIFICATION	PID FIELD SCREEN (PPM)	LUDLUM FIELD SCREEN (µREM/H)
0	S-1 0' to 4'	0.8'	0.0'	Concrete	0.0	18
			0.6'	Brown, SILT and mf SAND, wet, no odor		
2				*Refusal @ ~1.9' BGS*		
4						
6						
8						
10						
12						
14						
16						
18						

WATER LEVEL DATA			BOTTOM OF CASING	BOTTOM OF BORING	GROUNDWATER ENCOUNTERED
DATE	TIME	ELAPSED TIME			
				1.9'	0.6'

NOTES:

GENERAL NOTES
1) STRATIFICATION LINES REPRESENT APPROXIMATE BOUNDARY BETWEEN SOIL TYPES, TRANSITIONS MAY BE GRADUAL.
2) WATER LEVEL READINGS HAVE BEEN MADE AT TIMES AND UNDER CONDITIONS STATED, FLUCTUATIONS OF GROUNDWATER
3) Abbreviations

and = 35 to 50 %	c = coarse	
some = 20 to 35%	m = medium	BGS = Below the Ground Surface
little = 10 to 20%	f = fine	NA = Not Applicable
trace = 1 to 10%	vf = very fine	

BORING: SB-39

LABELLA Associates, P.C.

300 STATE STREET, ROCHESTER, NY
ENVIRONMENTAL ENGINEERING CONSULTANTS

PROJECT
690 Saint Paul Street
Rochester, New York
BCP Site #C828159

BORING: SB-40
SHEET 1 OF
JOB: 209280
CHKD BY: ED

CONTRACTOR: Nothnagle Drilling, Inc. BORING LOCATION: TIME: TO
DRILLER: J. Swytzer GROUND SURFACE ELEVATION: DATUM:
LABELLA REPRESENTATIVE: E. Dumrese START DATE: 9/27/2010 END DATE: 9/27/2010

TYPE OF DRILL RIG: Track Mounted Geoprobe Model 6610DT
AUGER SIZE AND TYPE: NA
OVERBURDEN SAMPLING METHOD: Direct Push
DRIVE SAMPLER TYPE: 4-foot Macrocore
INSIDE DIAMETER: ~1.8-Inch
OTHER:

DEPTH	SAMPLE NO AND DEPTH	SAMPLE RECOVERY	STRATA CHANGE	VISUAL CLASSIFICATION	PID FIELD SCREEN (PPM)	LUDLUM FIELD SCREEN (µREM/H)
0	S-1 0' to 4'	0.8'	0.0'	Concrete	0.0	44
			0.6'	Brown, SILT, moist, no odor		
2				*Refusal @ ~2.0' BGS*		
4						
6						
8						
10						
12						
14						
16						
18						

WATER LEVEL DATA			BOTTOM OF CASING	BOTTOM OF BORING	GROUNDWATER ENCOUNTERED
DATE	TIME	ELAPSED TIME			
				2.0'	No

NOTES:

GENERAL NOTES
1) STRATIFICATION LINES REPRESENT APPROXIMATE BOUNDARY BETWEEN SOIL TYPES, TRANSITIONS MAY BE GRADUAL.
2) WATER LEVEL READINGS HAVE BEEN MADE AT TIMES AND UNDER CONDITIONS STATED, FLUCTUATIONS OF GROUNDWATER
3) Abbreviations
and = 35 to 50 %
some = 20 to 35%
little = 10 to 20%
trace = 1 to 10%
c = coarse
m = medium
f = fine
vf = very fine
BGS = Below the Ground Surface
NA = Not Applicable

BORING: SB-40

LABELLA Associates, P.C.

300 STATE STREET, ROCHESTER, NY
ENVIRONMENTAL ENGINEERING CONSULTANTS

PROJECT
690 Saint Paul Street
Rochester, New York
BCP Site #C828159

BORING: SB-41
SHEET 1 OF
JOB: 209280
CHKD BY: ED

CONTRACTOR: Nothnagle Drilling, Inc. BORING LOCATION: TIME: TO
DRILLER: J. Swytzer GROUND SURFACE ELEVATION: DATUM:
LABELLA REPRESENTATIVE: E. Dumrese START DATE: 9/27/2010 END DATE: 9/27/2010

TYPE OF DRILL RIG: Track Mounted Geoprobe Model 6610DT
AUGER SIZE AND TYPE: NA
OVERBURDEN SAMPLING METHOD: Direct Push
DRIVE SAMPLER TYPE: 4-foot Macrocore
INSIDE DIAMETER: ~1.8-Inch
OTHER:

DEPTH	SAMPLE NO AND DEPTH	SAMPLE RECOVERY	STRATA CHANGE	VISUAL CLASSIFICATION	PID FIELD SCREEN (PPM)	LUDLUM FIELD SCREEN (µREM/H)
0	S-1 0' to 4'	1.1'	0.0'	Concrete	0.0	38
			0.6'	Brown, mc SAND and GRAVEL, moist, no odor		
2				*Refusal @ ~2.3' BGS*		
4						
6						
8						
10						
12						
14						
16						
18						

WATER LEVEL DATA			BOTTOM OF	BOTTOM OF	GROUNDWATER
DATE	TIME	ELAPSED TIME	CASING	BORING	ENCOUNTERED
				2.3'	No

NOTES:

GENERAL NOTES

1) STRATIFICATION LINES REPRESENT APPROXIMATE BOUNDARY BETWEEN SOIL TYPES, TRANSITIONS MAY BE GRADUAL.

2) WATER LEVEL READINGS HAVE BEEN MADE AT TIMES AND UNDER CONDITIONS STATED, FLUCTUATIONS OF GROUNDWATER

3) Abbreviations

and = 35 to 50 %	c = coarse	
some = 20 to 35%	m = medium	BGS = Below the Ground Surface
little = 10 to 20%	f = fine	NA = Not Applicable
trace = 1 to 10%	vf = very fine	

BORING: SB-41

LABELLA Associates, P.C.

300 STATE STREET, ROCHESTER, NY
ENVIRONMENTAL ENGINEERING CONSULTANTS

PROJECT
690 Saint Paul Street
Rochester, New York
BCP Site #C828159

BORING: **SB-42**
SHEET 1 OF
JOB: **209280**
CHKD BY: ED

CONTRACTOR: Nothnagle Drilling, Inc. BORING LOCATION: TIME: 1100 TO 1145
DRILLER: J. Swytzer GROUND SURFACE ELEVATION: DATUM:
LABELLA REPRESENTATIVE: E. Dumrese START DATE: 6/23/2010 END DATE: 6/23/10

TYPE OF DRILL RIG: Track Mounted Geoprobe Model 6610DT DRIVE SAMPLER TYPE: 4-foot Macrocore
AUGER SIZE AND TYPE: NA INSIDE DIAMETER: ~1.8-Inch
OVERBURDEN SAMPLING METHOD: Direct Push OTHER:

DEPTH	SAMPLE NO. AND DEPTH	SAMPLE RECOVERY	STRATA CHANGE	VISUAL CLASSIFICATION	PID FIELD SCREEN (PPM)	LUDLUM FIELD SCREEN (µREM/H)
0	S-1 0' to 4'	1.7'	0.0'	Concrete	0.0	18
			1.0'	Light brown, SILT and mf SAND, moist, no odor		
2					0.0	21
4				*Refusal @ ~4.0' BGS*		
6						
8						
10						
12						
14						
16						
18						

WATER LEVEL DATA			BOTTOM OF CASING	BOTTOM OF BORING	GROUNDWATER ENCOUNTERED
DATE	TIME	ELAPSED TIME			
				4.0'	NO

NOTES:

GENERAL NOTES
1) STRATIFICATION LINES REPRESENT APPROXIMATE BOUNDARY BETWEEN SOIL TYPES, TRANSITIONS MAY BE GRADUAL.
2) WATER LEVEL READINGS HAVE BEEN MADE AT TIMES AND UNDER CONDITIONS STATED, FLUCTUATIONS OF GROUNDWATER
3) Abbreviations and = 35 to 50 % c = coarse
some = 20 to 35% m = medium BGS = Below the Ground Surface
little = 10 to 20% f = fine NA = Not Applicable
trace = 1 to 10% vf = very fine

BORING: **SB-42**

LABELLA Associates, P.C.

300 STATE STREET, ROCHESTER, NY
ENVIRONMENTAL ENGINEERING CONSULTANTS

PROJECT
690 Saint Paul Street
Rochester, New York
BCP Site #C828159

BORING: SB-43
SHEET 1 OF
JOB: 209280
CHKD BY: ED

CONTRACTOR: Nothnagle Drilling, Inc. BORING LOCATION: TIME: 1100 TO 1145
DRILLER: J. Swytzer GROUND SURFACE ELEVATION: DATUM:
LABELLA REPRESENTATIVE: E. Dumrese START DATE: 9/28/2010 END DATE: 9/28/2010

TYPE OF DRILL RIG: Track Mounted Geoprobe Model 6610DT
AUGER SIZE AND TYPE: NA
OVERBURDEN SAMPLING METHOD: Direct Push
DRIVE SAMPLER TYPE: 4-foot Macrocore
INSIDE DIAMETER: ~1.8-Inch
OTHER:

DEPTH	SAMPLE NO AND DEPTH	SAMPLE RECOVERY	STRATA CHANGE	VISUAL CLASSIFICATION	PID FIELD SCREEN (PPM)	LUDLUM FIELD SCREEN (µREM/H)
0	S-1 0' to 4'	1.6'	0.0'	Concrete	0.0	42
			0.6'	Brown, SILT and mc SAND, little Gravel, wet, no odor		
2					0.0	30
				Refusal @ ~3.5' BGS		
4						
6						
8						
10						
12						
14						
16						
18						

WATER LEVEL DATA			BOTTOM OF	BOTTOM OF	GROUNDWATER
DATE	TIME	ELAPSED TIME	CASING	BORING	ENCOUNTERED
				3.5'	0.6'

NOTES:

GENERAL NOTES
1) STRATIFICATION LINES REPRESENT APPROXIMATE BOUNDARY BETWEEN SOIL TYPES, TRANSITIONS MAY BE GRADUAL.
2) WATER LEVEL READINGS HAVE BEEN MADE AT TIMES AND UNDER CONDITIONS STATED, FLUCTUATIONS OF GROUNDWATER
3) Abbreviations
and = 35 to 50 %
some = 20 to 35%
little = 10 to 20%
trace = 1 to 10%
c = coarse
m = medium
f = fine
vf = very fine
BGS = Below the Ground Surface
NA = Not Applicable

BORING: SB-43

LABELLA Associates, PC.

300 STATE STREET, ROCHESTER, NY
ENVIRONMENTAL ENGINEERING CONSULTANTS

PROJECT
690 Saint Paul Street
Rochester, New York
BCP Site #C828159

BORING: **SB-44**
SHEET 1 OF
JOB: **209280**
CHKD BY: ED

CONTRACTOR: Nothnagle Drilling, Inc. BORING LOCATION: TIME: 1300 TO 1320
DRILLER: J. Swytzer GROUND SURFACE ELEVATION: DATUM:
LABELLA REPRESENTATIVE: E. Dumrese START DATE: 6/23/2010 END DATE: 6/23/10

TYPE OF DRILL RIG: Track Mounted Geoprobe Model 6610DT DRIVE SAMPLER TYPE: 4-foot Macrocore
AUGER SIZE AND TYPE: NA INSIDE DIAMETER: ~1.8-Inch
OVERBURDEN SAMPLING METHOD: Direct Push OTHER:

DEPTH	SAMPLE NO. AND DEPTH	SAMPLE RECOVERY	STRATA CHANGE	VISUAL CLASSIFICATION	PID FIELD SCREEN (PPM)	LUDLUM FIELD SCREEN (µREM/H)
0	S-1 0' to 4'	1.7'	0.0'	Concrete	0.0	17
			0.8'	Light brown, mf SAND and SILT, moist, no odor		
2					0.0	13
				Refusal @ ~3.5' BGS		
4						
6						
8						
10						
12						
14						
16						
18						

WATER LEVEL DATA			BOTTOM OF CASING	BOTTOM OF BORING	GROUNDWATER ENCOUNTERED
DATE	TIME	ELAPSED TIME			
				3.5'	NO

NOTES:

GENERAL NOTES
1) STRATIFICATION LINES REPRESENT APPROXIMATE BOUNDARY BETWEEN SOIL TYPES, TRANSITIONS MAY BE GRADUAL.
2) WATER LEVEL READINGS HAVE BEEN MADE AT TIMES AND UNDER CONDITIONS STATED, FLUCTUATIONS OF GROUNDWATER
3) Abbreviations
and = 35 to 50 % c = coarse
some = 20 to 35% m = medium BGS = Below the Ground Surface
little = 10 to 20% f = fine NA = Not Applicable
trace = 1 to 10% vf = very fine

BORING: **SB-44**

LABELLA Associates, P.C.

300 STATE STREET, ROCHESTER, NY
ENVIRONMENTAL ENGINEERING CONSULTANTS

PROJECT
690 Saint Paul Street
Rochester, New York
BCP Site #C828159

BORING: SB-45
SHEET 1 OF
JOB: 209280
CHKD BY: ED

CONTRACTOR: Nothnagle Drilling, Inc. BORING LOCATION: TIME: 1000 TO 1015
DRILLER: J. Swytzer GROUND SURFACE ELEVATION: DATUM:
LABELLA REPRESENTATIVE: E. Dumrese START DATE: 6/23/2010 END DATE: 6/23/10

TYPE OF DRILL RIG: Track Mounted Geoprobe Model 6610DT DRIVE SAMPLER TYPE: 4-foot Macrocore
AUGER SIZE AND TYPE: NA INSIDE DIAMETER: ~1.8-Inch
OVERBURDEN SAMPLING METHOD: Direct Push OTHER:

DEPTH	SAMPLE NO. AND DEPTH	SAMPLE RECOVERY	STRATA CHANGE	VISUAL CLASSIFICATION	PID FIELD SCREEN (PPM)	LUDLUM FIELD SCREEN (µREM/H)
0	S-1 0' to 4'	1.7'	0.0'	Concrete	0.0	16
			0.8'	Light brown, mf SAND and SILT, moist, no odor		
2					0.0	13
				Refusal @ ~3.0' BGS		
4						
6						
8						
10						
12						
14						
16						
18						

WATER LEVEL DATA			BOTTOM OF CASING	BOTTOM OF BORING	GROUNDWATER ENCOUNTERED
DATE	TIME	ELAPSED TIME			
				3.0'	No

NOTES:

GENERAL NOTES
1) STRATIFICATION LINES REPRESENT APPROXIMATE BOUNDARY BETWEEN SOIL TYPES, TRANSITIONS MAY BE GRADUAL.
2) WATER LEVEL READINGS HAVE BEEN MADE AT TIMES AND UNDER CONDITIONS STATED, FLUCTUATIONS OF GROUNDWATER
3) Abbreviations
and = 35 to 50 % c = coarse
some = 20 to 35% m = medium BGS = Below the Ground Surface
little = 10 to 20% f = fine NA = Not Applicable
trace = 1 to 10% vf = very fine

BORING: SB-45

LABELLA Associates, P.C.

300 STATE STREET, ROCHESTER, NY
ENVIRONMENTAL ENGINEERING CONSULTANTS

PROJECT
690 Saint Paul Street
Rochester, New York
BCP Site #C828159

BORING: **SB-46**
SHEET . OF
JOB: **209280**
CHKD BY: ED

CONTRACTOR: Nothnagle Drilling, Inc. BORING LOCATION: TIME: 1015 TO 1030
DRILLER: J. Swytzer GROUND SURFACE ELEVATION: DATUM:
LABELLA REPRESENTATIVE: E. Dumrese START DATE: 6/23/2010 END DATE: 6/23/10

TYPE OF DRILL RIG: Track Mounted Geoprobe Model 6610DT
AUGER SIZE AND TYPE: NA
OVERBURDEN SAMPLING METHOD: Direct Push
DRIVE SAMPLER TYPE: 4-foot Macrocore
INSIDE DIAMETER: ~1.8-Inch
OTHER:

DEPTH	SAMPLE NO. AND DEPTH	SAMPLE RECOVERY	STRATA CHANGE	VISUAL CLASSIFICATION	PID FIELD SCREEN (PPM)	LUDLUM FIELD SCREEN (µREM/H)
0	S-1 0' to 4'	2.2'	0.0'	Concrete	0.0	24
			0.8'	Brown to black, SILT and mf SAND, moist, no odor		
2					0.0	19
				Refusal @ ~3.2' BGS		
4						
6						
8						
10						
12						
14						
16						
18						

WATER LEVEL DATA			BOTTOM OF CASING	BOTTOM OF BORING	GROUNDWATER ENCOUNTERED
DATE	TIME	ELAPSED TIME			
				3.2'	No

NOTES:

GENERAL NOTES
1) STRATIFICATION LINES REPRESENT APPROXIMATE BOUNDARY BETWEEN SOIL TYPES, TRANSITIONS MAY BE GRADUAL.
2) WATER LEVEL READINGS HAVE BEEN MADE AT TIMES AND UNDER CONDITIONS STATED, FLUCTUATIONS OF GROUNDWATER
3) Abbreviations
and = 35 to 50 %
some = 20 to 35%
little = 10 to 20%
trace = 1 to 10%
c = coarse
m = medium
f = fine
vf = very fine
BGS = Below the Ground Surface
NA = Not Applicable

BORING: **SB-46**

LABELLA Associates, P.C.

300 STATE STREET, ROCHESTER, NY
ENVIRONMENTAL ENGINEERING CONSULTANTS

PROJECT
690 Saint Paul Street
Rochester, New York
BCP Site #C828159

BORING: **SB-47**
SHEET . OF
JOB: **209280**
CHKD BY: ED

CONTRACTOR: Nothnagle Drilling, Inc. BORING LOCATION: TIME: 1030 TO 1045
DRILLER: J. Swytzer GROUND SURFACE ELEVATION: DATUM:
LABELLA REPRESENTATIVE: E. Dumrese START DATE: 6/23/2010 END DATE: 6/23/10

TYPE OF DRILL RIG: Track Mounted Geoprobe Model 6610DT DRIVE SAMPLER TYPE: 4-foot Macrocore
AUGER SIZE AND TYPE: NA INSIDE DIAMETER: ~1.8-Inch
OVERBURDEN SAMPLING METHOD: Direct Push OTHER:

DEPTH	SAMPLE NO. AND DEPTH	SAMPLE RECOVERY	STRATA CHANGE	VISUAL CLASSIFICATION	PID FIELD SCREEN (PPM)	LUDLUM FIELD SCREEN (µREM/H)
0	S-1 0' to 4'	1.8'	0.0'	Concrete	0.0	12
			0.8'	Light brown, SILT and mf SAND, moist, no odor		
2					0.0	11
				Refusal @ ~3.7' BGS		
4						
6						
8						
10						
12						
14						
16						
18						

WATER LEVEL DATA			BOTTOM OF CASING	BOTTOM OF BORING	GROUNDWATER ENCOUNTERED
DATE	TIME	ELAPSED TIME			
				3.7'	No

NOTES:

GENERAL NOTES
1) STRATIFICATION LINES REPRESENT APPROXIMATE BOUNDARY BETWEEN SOIL TYPES, TRANSITIONS MAY BE GRADUAL.
2) WATER LEVEL READINGS HAVE BEEN MADE AT TIMES AND UNDER CONDITIONS STATED, FLUCTUATIONS OF GROUNDWATER
3) Abbreviations and = 35 to 50 % c = coarse
some = 20 to 35% m = medium BGS = Below the Ground Surface
little = 10 to 20% f = fine NA = Not Applicable
trace = 1 to 10% vf = very fine

BORING: **SB-47**

LABELLA Associates, P.C.

300 STATE STREET, ROCHESTER, NY
ENVIRONMENTAL ENGINEERING CONSULTANTS

PROJECT
690 Saint Paul Street
Rochester, New York
BCP Site #C828159

BORING: SB-48
SHEET . OF
JOB: 209280
CHKD BY: ED

CONTRACTOR: Nothnagle Drilling, Inc. BORING LOCATION: TIME: TO
DRILLER: J. Swytzer GROUND SURFACE ELEVATION: DATUM:
LABELLA REPRESENTATIVE: E. Dumrese START DATE: 9/28/2010 END DATE: 9/28/2010

TYPE OF DRILL RIG: Track Mounted Geoprobe Model 6610DT
AUGER SIZE AND TYPE: NA
OVERBURDEN SAMPLING METHOD: Direct Push
DRIVE SAMPLER TYPE: 4-foot Macrocore
INSIDE DIAMETER: ~1.8-Inch
OTHER:

DEPTH	SAMPLE NO AND DEPTH	SAMPLE RECOVERY	STRATA CHANGE	VISUAL CLASSIFICATION	PID FIELD SCREEN (PPM)	LUDLUM FIELD SCREEN (µREM/H)
0	S-1 0' to 4'	0.9'	0.0'	Concrete	0.0	28
			0.6'	Brown, mc SAND, little Silt and c Gravel, moist, no odor		
2					0.0	92
				Refusal @ ~3.4' BGS		
4						
6						
8						
10						
12						
14						
16						
18						

WATER LEVEL DATA			BOTTOM OF	BOTTOM OF	GROUNDWATER
DATE	TIME	ELAPSED TIME	CASING	BORING	ENCOUNTERED
				3.4'	No

NOTES:

GENERAL NOTES

1) STRATIFICATION LINES REPRESENT APPROXIMATE BOUNDARY BETWEEN SOIL TYPES, TRANSITIONS MAY BE GRADUAL.

2) WATER LEVEL READINGS HAVE BEEN MADE AT TIMES AND UNDER CONDITIONS STATED, FLUCTUATIONS OF GROUNDWATER

3) Abbreviations

and = 35 to 50 %	c = coarse	
some = 20 to 35%	m = medium	BGS = Below the Ground Surface
little = 10 to 20%	f = fine	NA = Not Applicable
trace = 1 to 10%	vf = very fine	

BORING: SB-48

LABELLA Associates, P.C.

300 STATE STREET, ROCHESTER, NY
ENVIRONMENTAL ENGINEERING CONSULTANTS

PROJECT
690 Saint Paul Street
Rochester, New York
BCP Site #C828159

BORING: SB-49
SHEET . OF
JOB: 209280
CHKD BY: ED

CONTRACTOR: Nothnagle Drilling, Inc. BORING LOCATION: TIME: TO
DRILLER: J. Swytzer GROUND SURFACE ELEVATION: DATUM:
LABELLA REPRESENTATIVE: E. Dumrese START DATE: 9/28/2010 END DATE: 9/28/2010

TYPE OF DRILL RIG: Track Mounted Geoprobe Model 6610DT
AUGER SIZE AND TYPE: NA
OVERBURDEN SAMPLING METHOD: Direct Push
DRIVE SAMPLER TYPE: 4-foot Macrocore
INSIDE DIAMETER: ~1.8-Inch
OTHER:

DEPTH	SAMPLE NO AND DEPTH	SAMPLE RECOVERY	STRATA CHANGE	VISUAL CLASSIFICATION	PID FIELD SCREEN (PPM)	LUDLUM FIELD SCREEN (µREM/H)
0	S-1 0' to 4'	0.4'	0.0'	Concrete	0.0	52
			0.6'	Brown, SILT and mf SAND, moist, no odor		
				Refusal @ ~1.3' BGS		
2						
4						
6						
8						
10						
12						
14						
16						
18						

WATER LEVEL DATA			BOTTOM OF	BOTTOM OF	GROUNDWATER
DATE	TIME	ELAPSED TIME	CASING	BORING	ENCOUNTERED
				1.3'	No

NOTES:

GENERAL NOTES

1) STRATIFICATION LINES REPRESENT APPROXIMATE BOUNDARY BETWEEN SOIL TYPES, TRANSITIONS MAY BE GRADUAL.

2) WATER LEVEL READINGS HAVE BEEN MADE AT TIMES AND UNDER CONDITIONS STATED, FLUCTUATIONS OF GROUNDWATER

3) Abbreviations

and = 35 to 50 %	c = coarse	
some = 20 to 35%	m = medium	BGS = Below the Ground Surface
little = 10 to 20%	f = fine	NA = Not Applicable
trace = 1 to 10%	vf = very fine	

BORING: SB-49

LABELLA Associates, P.C.

300 STATE STREET, ROCHESTER, NY
ENVIRONMENTAL ENGINEERING CONSULTANTS

PROJECT
690 Saint Paul Street
Rochester, New York
BCP Site #C828159

BORING: SB-50
SHEET . OF
JOB: 209280
CHKD BY: ED

CONTRACTOR: Nothnagle Drilling, Inc. BORING LOCATION: TIME: TO
DRILLER: J. Swytzer GROUND SURFACE ELEVATION: DATUM:
LABELLA REPRESENTATIVE: E. Dumrese START DATE: 9/28/2010 END DATE: 9/28/2010

TYPE OF DRILL RIG: Track Mounted Geoprobe Model 6610DT
AUGER SIZE AND TYPE: NA
OVERBURDEN SAMPLING METHOD: Direct Push
DRIVE SAMPLER TYPE: 4-foot Macrocore
INSIDE DIAMETER: ~1.8-Inch
OTHER:

DEPTH	SAMPLE NO AND DEPTH	SAMPLE RECOVERY	STRATA CHANGE	VISUAL CLASSIFICATION	PID FIELD SCREEN (PPM)	LUDLUM FIELD SCREEN (µREM/H)
0	S-1 0' to 4'	1.4'	0.0'	Concrete	0.0	42
			0.6'	Brown, SILT, some mf Sand, little Gravel, moist, no odor		
2					0.0	18
				Refusal @ ~3.5' BGS		
4						
6						
8						
10						
12						
14						
16						
18						

WATER LEVEL DATA			BOTTOM OF	BOTTOM OF	GROUNDWATER
DATE	TIME	ELAPSED TIME	CASING	BORING	ENCOUNTERED
				3.5'	No

NOTES:

GENERAL NOTES

1) STRATIFICATION LINES REPRESENT APPROXIMATE BOUNDARY BETWEEN SOIL TYPES, TRANSITIONS MAY BE GRADUAL.

2) WATER LEVEL READINGS HAVE BEEN MADE AT TIMES AND UNDER CONDITIONS STATED, FLUCTUATIONS OF GROUNDWATER

3) Abbreviations

and = 35 to 50 %	c = coarse	
some = 20 to 35%	m = medium	BGS = Below the Ground Surface
little = 10 to 20%	f = fine	NA = Not Applicable
trace = 1 to 10%	vf = very fine	

BORING: SB-50

LABELLA Associates, P.C.

300 STATE STREET, ROCHESTER, NY
ENVIRONMENTAL ENGINEERING CONSULTANTS

PROJECT
690 Saint Paul Street
Rochester, New York
BCP Site #C828159

BORING: SB-51
SHEET . OF
JOB: 209280
CHKD BY: ED

CONTRACTOR: Nothnagle Drilling, Inc. BORING LOCATION: TIME: 930 TO 945
DRILLER: J. Swytzer GROUND SURFACE ELEVATION: DATUM:
LABELLA REPRESENTATIVE: E. Dumrese START DATE: 6/23/2010 END DATE: 6/23/10

TYPE OF DRILL RIG: Track Mounted Geoprobe Model 6610DT DRIVE SAMPLER TYPE: 4-foot Macrocore
AUGER SIZE AND TYPE: NA INSIDE DIAMETER: ~1.8-Inch
OVERBURDEN SAMPLING METHOD: Direct Push OTHER:

DEPTH	SAMPLE NO. AND DEPTH	SAMPLE RECOVERY	STRATA CHANGE	VISUAL CLASSIFICATION	PID FIELD SCREEN (PPM)	LUDLUM FIELD SCREEN (µREM/H)
0	S-1 0' to 4'	1.9'	0.0'	Concrete	0.0	10
			0.9'	Brown, crushed Gravel, some Silt, moist, no odor		
2			2.0'	Light brown, mf SAND and SILT, wet, no odor	0.0	11
				Refusal @ ~2.8' BGS		
4						
6						
8						
10						
12						
14						
16						
18						

WATER LEVEL DATA			BOTTOM OF CASING	BOTTOM OF BORING	GROUNDWATER ENCOUNTERED
DATE	TIME	ELAPSED TIME			
				2.8'	2.0'

NOTES:

GENERAL NOTES
1) STRATIFICATION LINES REPRESENT APPROXIMATE BOUNDARY BETWEEN SOIL TYPES, TRANSITIONS MAY BE GRADUAL.
2) WATER LEVEL READINGS HAVE BEEN MADE AT TIMES AND UNDER CONDITIONS STATED, FLUCTUATIONS OF GROUNDWATER
3) Abbreviations
and = 35 to 50 % c = coarse
some = 20 to 35% m = medium BGS = Below the Ground Surface
little = 10 to 20% f = fine NA = Not Applicable
trace = 1 to 10% vf = very fine

BORING: SB-51

LABELLA Associates, P.C.

300 STATE STREET, ROCHESTER, NY
ENVIRONMENTAL ENGINEERING CONSULTANTS

PROJECT
690 Saint Paul Street
Rochester, New York
BCP Site #C828159

BORING: SB-52
SHEET . OF
JOB: 209280
CHKD BY: ED

CONTRACTOR: Nothnagle Drilling, Inc. BORING LOCATION: TIME: 945 TO 1000
DRILLER: J. Swytzer GROUND SURFACE ELEVATION: DATUM:
LABELLA REPRESENTATIVE: E. Dumrese START DATE: 6/23/2010 END DATE: 6/23/10

TYPE OF DRILL RIG: Track Mounted Geoprobe Model 6610DT DRIVE SAMPLER TYPE: 4-foot Macrocore
AUGER SIZE AND TYPE: NA INSIDE DIAMETER: ~1.8-Inch
OVERBURDEN SAMPLING METHOD: Direct Push OTHER:

DEPTH	SAMPLE NO. AND DEPTH	SAMPLE RECOVERY	STRATA CHANGE	VISUAL CLASSIFICATION	PID FIELD SCREEN (PPM)	LUDLUM FIELD SCREEN (µREM/H)
0	S-1 0' to 4'	3.1'	0.0'	Concrete		
				FILL MATERIALS	0.0	11
			0.9'	Black, cinders, coals and c Gravel, moist, no odor		
2					0.1	7
			2.8'	Light brown, SILT and mf SAND, moist, no odor		
4				*Refusal @ ~4.0' BGS*		
6						
8						
10						
12						
14						
16						
18						

WATER LEVEL DATA			BOTTOM OF	BOTTOM OF	GROUNDWATER	NOTES:
DATE	TIME	ELAPSED TIME	CASING	BORING	ENCOUNTERED	
				4.0'	No	

GENERAL NOTES
1) STRATIFICATION LINES REPRESENT APPROXIMATE BOUNDARY BETWEEN SOIL TYPES, TRANSITIONS MAY BE GRADUAL.
2) WATER LEVEL READINGS HAVE BEEN MADE AT TIMES AND UNDER CONDITIONS STATED, FLUCTUATIONS OF GROUNDWATER
3) Abbreviations

and = 35 to 50 %	c = coarse	
some = 20 to 35%	m = medium	BGS = Below the Ground Surface
little = 10 to 20%	f = fine	NA = Not Applicable
trace = 1 to 10%	vf = very fine	

BORING: SB-52

LABELLA Associates, P.C.

300 STATE STREET, ROCHESTER, NY
ENVIRONMENTAL ENGINEERING CONSULTANTS

PROJECT
690 Saint Paul Street
Rochester, New York
BCP Site #C828159

BORING: **SB-53**
SHEET . OF
JOB: **209280**
CHKD BY: ED

CONTRACTOR: Nothnagle Drilling, Inc. BORING LOCATION: TIME: 1530 TO 1545
DRILLER: J. Swytzer GROUND SURFACE ELEVATION: DATUM:
LABELLA REPRESENTATIVE: E. Dumrese START DATE: 6/22/2010 END DATE: 6/22/10

TYPE OF DRILL RIG: Track Mounted Geoprobe Model 6610DT
AUGER SIZE AND TYPE: NA
OVERBURDEN SAMPLING METHOD: Direct Push
DRIVE SAMPLER TYPE: 4-foot Macrocore
INSIDE DIAMETER: ~1.8-Inch
OTHER:

DEPTH	SAMPLE NO AND DEPTH	SAMPLE RECOVERY	STRATA CHANGE	VISUAL CLASSIFICATION	PID FIELD SCREEN (PPM)	LUDLUM FIELD SCREEN (µREM/H)
0	S-1 0' to 4'	0.7'	0.0'	Concrete	3.7	9
				VOID SPACE		
			1.7'	Crushed Gravel, Grey, SILT and mf SAND, moist, slight cutting oil odor		
2					4.6	11
				Refusal @ ~3.5' BGS		
4						
6						
8						
10						
12						
14						
16						
18						

WATER LEVEL DATA			BOTTOM OF	BOTTOM OF	GROUNDWATER
DATE	TIME	ELAPSED TIME	CASING	BORING	ENCOUNTERED
				3.5'	No

NOTES:

GENERAL NOTES
1) STRATIFICATION LINES REPRESENT APPROXIMATE BOUNDARY BETWEEN SOIL TYPES, TRANSITIONS MAY BE GRADUAL.
2) WATER LEVEL READINGS HAVE BEEN MADE AT TIMES AND UNDER CONDITIONS STATED, FLUCTUATIONS OF GROUNDWATER
3) Abbreviations
and = 35 to 50 %
some = 20 to 35%
little = 10 to 20%
trace = 1 to 10%
c = coarse
m = medium
f = fine
vf = very fine
BGS = Below the Ground Surface
NA = Not Applicable

BORING: **SB-53**

LABELLA Associates, P.C.

300 STATE STREET, ROCHESTER, NY
ENVIRONMENTAL ENGINEERING CONSULTANTS

PROJECT
690 Saint Paul Street
Rochester, New York
BCP Site #C828159

BORING: SB-54
SHEET . OF
JOB: 209280
CHKD BY: ED

CONTRACTOR: Nothnagle Drilling, Inc. BORING LOCATION: TIME: TO
DRILLER: J. Swytzer GROUND SURFACE ELEVATION: DATUM:
LABELLA REPRESENTATIVE: E. Dumrese START DATE: 9/28/2010 END DATE: 9/28/2010

TYPE OF DRILL RIG: Track Mounted Geoprobe Model 6610DT
AUGER SIZE AND TYPE: NA
OVERBURDEN SAMPLING METHOD: Direct Push
DRIVE SAMPLER TYPE: 4-foot Macrocore
INSIDE DIAMETER: ~1.8-Inch
OTHER:

DEPTH	SAMPLE NO AND DEPTH	SAMPLE RECOVERY	STRATA CHANGE	VISUAL CLASSIFICATION	PID FIELD SCREEN (PPM)	LUDLUM FIELD SCREEN (µREM/H)
0	S-1 0' to 4'	0.9'	0.0'	Concrete	0.0	77
2			0.6'	Brown, SILT, some mf Sand and Gravel, wet @~2.8' BGS	0.0	29
				Refusal @ ~3.4' BGS		
4						
6						
8						
10						
12						
14						
16						
18						

WATER LEVEL DATA			BOTTOM OF	BOTTOM OF	GROUNDWATER
DATE	TIME	ELAPSED TIME	CASING	BORING	ENCOUNTERED
				3.4'	2.8'

NOTES:

GENERAL NOTES
1) STRATIFICATION LINES REPRESENT APPROXIMATE BOUNDARY BETWEEN SOIL TYPES, TRANSITIONS MAY BE GRADUAL.
2) WATER LEVEL READINGS HAVE BEEN MADE AT TIMES AND UNDER CONDITIONS STATED, FLUCTUATIONS OF GROUNDWATER
3) Abbreviations

and = 35 to 50 %	c = coarse	
some = 20 to 35%	m = medium	BGS = Below the Ground Surface
little = 10 to 20%	f = fine	NA = Not Applicable
trace = 1 to 10%	vf = very fine	

BORING: SB-54

LABELLA Associates, P.C.

300 STATE STREET, ROCHESTER, NY
ENVIRONMENTAL ENGINEERING CONSULTANTS

PROJECT
690 Saint Paul Street
Rochester, New York
BCP Site #C828159

BORING: SB-55
SHEET . OF
JOB: 209280
CHKD BY: ED

CONTRACTOR: Nothnagle Drilling, Inc. BORING LOCATION: TIME: TO
DRILLER: J. Swytzer GROUND SURFACE ELEVATION: DATUM:
LABELLA REPRESENTATIVE: E. Dumrese START DATE: 9/25/2010 END DATE: 9/25/2010

TYPE OF DRILL RIG: Track Mounted Geoprobe Model 6610DT
AUGER SIZE AND TYPE: NA
OVERBURDEN SAMPLING METHOD: Direct Push
DRIVE SAMPLER TYPE: 4-foot Macrocore
INSIDE DIAMETER: ~1.8-Inch
OTHER:

DEPTH	SAMPLE NO AND DEPTH	SAMPLE RECOVERY	STRATA CHANGE	VISUAL CLASSIFICATION	PID FIELD SCREEN (PPM)	LUDLUM FIELD SCREEN (µREM/H)
0	S-1 0' to 4'	0.9'	0.0' 0.6'	Concrete Brown, SILT and mf SAND, moist, no odor	0.0	39
2				*Refusal @ ~1.4' BGS*		
4						
6						
8						
10						
12						
14						
16						
18						

WATER LEVEL DATA			BOTTOM OF	BOTTOM OF	GROUNDWATER
DATE	TIME	ELAPSED TIME	CASING	BORING	ENCOUNTERED
				1.4'	No

NOTES:

GENERAL NOTES
1) STRATIFICATION LINES REPRESENT APPROXIMATE BOUNDARY BETWEEN SOIL TYPES, TRANSITIONS MAY BE GRADUAL.
2) WATER LEVEL READINGS HAVE BEEN MADE AT TIMES AND UNDER CONDITIONS STATED, FLUCTUATIONS OF GROUNDWATER
3) Abbreviations
and = 35 to 50 %
some = 20 to 35%
little = 10 to 20%
trace = 1 to 10%
c = coarse
m = medium
f = fine
vf = very fine
BGS = Below the Ground Surface
NA = Not Applicable

BORING: SB-55

LABELLA Associates, P.C.

300 STATE STREET, ROCHESTER, NY
ENVIRONMENTAL ENGINEERING CONSULTANTS

PROJECT
690 Saint Paul Street
Rochester, New York
BCP Site #C828159

BORING: **SB-56**
SHEET . OF
JOB: **209280**
CHKD BY: ED

CONTRACTOR: Nothnagle Drilling, Inc. BORING LOCATION: TIME: 1515 TO 1530
DRILLER: J. Swytzer GROUND SURFACE ELEVATION: DATUM:
LABELLA REPRESENTATIVE: E. Dumrese START DATE: 6/22/2010 END DATE: 6/22/10

TYPE OF DRILL RIG: Track Mounted Geoprobe Model 6610DT
AUGER SIZE AND TYPE: NA
OVERBURDEN SAMPLING METHOD: Direct Push
DRIVE SAMPLER TYPE: 4-foot Macrocore
INSIDE DIAMETER: ~1.8-Inch
OTHER:

DEPTH	SAMPLE NO. AND DEPTH	SAMPLE RECOVERY	STRATA CHANGE	VISUAL CLASSIFICATION	PID FIELD SCREEN (PPM)	LUDLUM FIELD SCREEN (µREM/H)
0	S-1 0' to 4'	3.1'	0.0'	Concrete		15
			0.6'	**FILL MATERIALS** Black, cinders, coals, crushed Gravel, moist, no odor	0.0	
2					0.0	9
			3.0'	**NATIVE SOIL** Light brown, SILT and mf SAND, wet, no odor		
4	S-2 4' - 8'		4.0'	As above, wet, no odor	0.0	8
				Refusal @ ~5.3' BGS		
6						
8						
10						
12						
14						
16						
18						

WATER LEVEL DATA			BOTTOM OF CASING	BOTTOM OF BORING	GROUNDWATER ENCOUNTERED
DATE	TIME	ELAPSED TIME			
				5.3'	3.0'

NOTES:

GENERAL NOTES
1) STRATIFICATION LINES REPRESENT APPROXIMATE BOUNDARY BETWEEN SOIL TYPES, TRANSITIONS MAY BE GRADUAL.
2) WATER LEVEL READINGS HAVE BEEN MADE AT TIMES AND UNDER CONDITIONS STATED, FLUCTUATIONS OF GROUNDWATER
3) Abbreviations
and = 35 to 50 %
some = 20 to 35%
little = 10 to 20%
trace = 1 to 10%
c = coarse
m = medium
f = fine
vf = very fine
BGS = Below the Ground Surface
NA = Not Applicable

BORING: **SB-56**

LABELLA Associates, P.C.

300 STATE STREET, ROCHESTER, NY
ENVIRONMENTAL ENGINEERING CONSULTANTS

PROJECT
690 Saint Paul Street
Rochester, New York
BCP Site #C828159

BORING: SB-57
SHEET . OF
JOB: 209280
CHKD BY: ED

CONTRACTOR: Nothnagle Drilling, Inc. BORING LOCATION: TIME: 1250 TO 1315
DRILLER: J. Swytzer GROUND SURFACE ELEVATION: DATUM:
LABELLA REPRESENTATIVE: E. Dumrese START DATE: 9/23/2010 END DATE: 9/23/2010

TYPE OF DRILL RIG: Track Mounted Geoprobe Model 6610DT DRIVE SAMPLER TYPE: 4-foot Macrocore
AUGER SIZE AND TYPE: NA INSIDE DIAMETER: ~1.8-Inch
OVERBURDEN SAMPLING METHOD: Direct Push OTHER:

DEPTH	SAMPLE NO AND DEPTH	SAMPLE RECOVERY	STRATA CHANGE	VISUAL CLASSIFICATION	PID FIELD SCREEN (PPM)	LUDLUM FIELD SCREEN (µREM/H)
0	S-1 0' to 4'	2.8'	0.0'	Concrete		119
			0.6'	**FILL MATERIALS** Black, cinders, coals, crushed Gravel, moist, no odor	0.0	
2					0.0	86
			3.0'	Light brown, mf SAND, trace Silt, moist, no odor		
4	S-2 4' - 8'	1.1'	4.0'	As above, moist, no odor	0.0	35
				NATIVE SOIL (GLACIAL TILL)		
			4.6'	Light brown, SILT, some mf Sand and Gravel, wet, no odor		
				Refusal @ ~5.2' BGS		
6						
8						
10						
12						
14						
16						
18						

WATER LEVEL DATA			BOTTOM OF CASING	BOTTOM OF BORING	GROUNDWATER ENCOUNTERED
DATE	TIME	ELAPSED TIME			
				5.2'	4.6'

NOTES:

GENERAL NOTES
1) STRATIFICATION LINES REPRESENT APPROXIMATE BOUNDARY BETWEEN SOIL TYPES, TRANSITIONS MAY BE GRADUAL.
2) WATER LEVEL READINGS HAVE BEEN MADE AT TIMES AND UNDER CONDITIONS STATED, FLUCTUATIONS OF GROUNDWATER
3) Abbreviations and = 35 to 50 % c = coarse
some = 20 to 35% m = medium BGS = Below the Ground Surface
little = 10 to 20% f = fine NA = Not Applicable
trace = 1 to 10% vf = very fine

BORING: SB-57

LABELLA Associates, P.C.

300 STATE STREET, ROCHESTER, NY
ENVIRONMENTAL ENGINEERING CONSULTANTS

PROJECT
690 Saint Paul Street
Rochester, New York
BCP Site #C828159

BORING: SB-58
SHEET . OF
JOB: 209280
CHKD BY: ED

CONTRACTOR: Nothnagle Drilling, Inc. BORING LOCATION: TIME: 945 TO 1015
DRILLER: J. Swytzer GROUND SURFACE ELEVATION: DATUM:
LABELLA REPRESENTATIVE: E. Dumrese START DATE: 9/23/2010 END DATE: 9/23/2010

TYPE OF DRILL RIG: Track Mounted Geoprobe Model 6610DT
AUGER SIZE AND TYPE: NA
OVERBURDEN SAMPLING METHOD: Direct Push
DRIVE SAMPLER TYPE: 4-foot Macrocore
INSIDE DIAMETER: ~1.8-Inch
OTHER:

DEPTH	SAMPLE NO AND DEPTH	SAMPLE RECOVERY	STRATA CHANGE	VISUAL CLASSIFICATION	PID FIELD SCREEN (PPM)	LUDLUM FIELD SCREEN (µREM/H)
0	S-1 0' to 4'	2.5'	0.0'	Concrete	0.0	119
			0.3'	**FILL MATERIALS** Black, cinders, moist, no odor		
			0.6'			
2					0.0	86
			3.0'	Light brown, mf SAND, trace Silt, moist, no odor		
4	S-2 4' - 8'	4.0'	4.0'	As above, moist, no odor	0.0	35
			4.6'	**NATIVE SOIL (GLACIAL TILL)** Light brown, SILT, some mf Sand and Gravel, wet, no odor		
6						
				Refusal @ ~7.3' BGS		
8						
10						
12						
14						
16						
18						

WATER LEVEL DATA			BOTTOM OF CASING	BOTTOM OF BORING	GROUNDWATER ENCOUNTERED
DATE	TIME	ELAPSED TIME			
				7.3'	4.6'

NOTES:

GENERAL NOTES
1) STRATIFICATION LINES REPRESENT APPROXIMATE BOUNDARY BETWEEN SOIL TYPES, TRANSITIONS MAY BE GRADUAL.
2) WATER LEVEL READINGS HAVE BEEN MADE AT TIMES AND UNDER CONDITIONS STATED, FLUCTUATIONS OF GROUNDWATER
3) Abbreviations
and = 35 to 50 %
some = 20 to 35%
little = 10 to 20%
trace = 1 to 10%
c = coarse
m = medium
f = fine
vf = very fine
BGS = Below the Ground Surface
NA = Not Applicable

BORING: SB-58

LABELLA Associates, P.C.

300 STATE STREET, ROCHESTER, NY
ENVIRONMENTAL ENGINEERING CONSULTANTS

PROJECT
690 Saint Paul Street
Rochester, New York
BCP Site #C828159

BORING: SB-59
SHEET . OF
JOB: 209280
CHKD BY: ED

CONTRACTOR: Nothnagle Drilling, Inc. BORING LOCATION: TIME: TO
DRILLER: J. Swytzer GROUND SURFACE ELEVATION: DATUM:
LABELLA REPRESENTATIVE: E. Dumrese START DATE: 3/24/2010 END DATE: 3/24/2010

TYPE OF DRILL RIG: Track Mounted Geoprobe Model 6610DT
AUGER SIZE AND TYPE: NA
OVERBURDEN SAMPLING METHOD: Direct Push
DRIVE SAMPLER TYPE: 4-foot Macrocore
INSIDE DIAMETER: ~1.8-Inch
OTHER:

DEPTH	SAMPLE NO AND DEPTH	SAMPLE RECOVERY	STRATA CHANGE	VISUAL CLASSIFICATION	PID FIELD SCREEN (PPM)	LUDLUM FIELD SCREEN (µREM/H)
0	S-1 0' to 4'	3.1'	0.0'	Concrete		46
			0.4'	**FILL MATERIALS** Black, cinders, coals, moist, no odor	0.0	
			0.7'	Reddish to brown, SILT, some mf Sand, moist, no odor		
2			2.3'	Brown, mf SAND, little Silt and Gravel, moist, no odor	0.0	91
4	S-2 4' - 8'	2.2'	4.0'	As above, moist, no odor	0.0	42
				NATIVE SOIL (GLACIAL TILL)		
			4.6'	Light brown, SILT, some c Gravel and mf Sand, wet @ ~5.4' BGS		
6				*Refusal @ ~6.2' BGS*	0.0	
8						
10						
12						
14						
16						
18						

WATER LEVEL DATA			BOTTOM OF	BOTTOM OF	GROUNDWATER
DATE	TIME	ELAPSED TIME	CASING	BORING	ENCOUNTERED
				6.2'	5.4'

NOTES:

GENERAL NOTES
1) STRATIFICATION LINES REPRESENT APPROXIMATE BOUNDARY BETWEEN SOIL TYPES, TRANSITIONS MAY BE GRADUAL.
2) WATER LEVEL READINGS HAVE BEEN MADE AT TIMES AND UNDER CONDITIONS STATED, FLUCTUATIONS OF GROUNDWATER
3) Abbreviations
and = 35 to 50 %
some = 20 to 35%
little = 10 to 20%
trace = 1 to 10%
c = coarse
m = medium
f = fine
vf = very fine
BGS = Below the Ground Surface
NA = Not Applicable

BORING: SB-59

LABELLA Associates, P.C.

300 STATE STREET, ROCHESTER, NY
ENVIRONMENTAL ENGINEERING CONSULTANTS

PROJECT
690 Saint Paul Street
Rochester, New York
BCP Site #C828159

BORING: SB-60
SHEET . OF
JOB: 209280
CHKD BY: ED

CONTRACTOR: Nothnagle Drilling, Inc. BORING LOCATION: TIME: 1330 TO 1400
DRILLER: J. Swytzer GROUND SURFACE ELEVATION: DATUM:
LABELLA REPRESENTATIVE: E. Dumrese START DATE: 9/23/2010 END DATE: 9/23/2010

TYPE OF DRILL RIG: Track Mounted Geoprobe Model 6610DT DRIVE SAMPLER TYPE: 4-foot Macrocore
AUGER SIZE AND TYPE: NA INSIDE DIAMETER: ~1.8-Inch
OVERBURDEN SAMPLING METHOD: Direct Push OTHER:

DEPTH	SAMPLE NO AND DEPTH	SAMPLE RECOVERY	STRATA CHANGE	VISUAL CLASSIFICATION	PID FIELD SCREEN (PPM)	LUDLUM FIELD SCREEN (µREM/H)
0	S-1 0' to 4'	2.6'	0.0'	Concrete		62
			0.4'	**FILL MATERIALS** Black, cinders, coals, slag, foundry sand, moist, no odor	0.0	
2			2.5'	Light brown, SILT, some mf Sand, little Gravel, moist, no odor	0.0	110
			3.0'	Brown, mc SAND, moist, no odor		
4	S-2 4' - 8'	3.1'	4.0'	As above, moist, no odor	0.0	42
			4.6'	**NATIVE SOIL (GLACIAL TILL)** Light brown, SILT, some c Gravel and mf Sand, wet @ ~4.8' BGS		
6				*Refusal @ ~5.8' BGS*	0.0	53
8						
10						
12						
14						
16						
18						

WATER LEVEL DATA			BOTTOM OF CASING	BOTTOM OF BORING	GROUNDWATER ENCOUNTERED
DATE	TIME	ELAPSED TIME			
				5.8'	4.8'

NOTES:

GENERAL NOTES
1) STRATIFICATION LINES REPRESENT APPROXIMATE BOUNDARY BETWEEN SOIL TYPES, TRANSITIONS MAY BE GRADUAL.
2) WATER LEVEL READINGS HAVE BEEN MADE AT TIMES AND UNDER CONDITIONS STATED, FLUCTUATIONS OF GROUNDWATER
3) Abbreviations and = 35 to 50 % c = coarse
some = 20 to 35% m = medium BGS = Below the Ground Surface
little = 10 to 20% f = fine NA = Not Applicable
trace = 1 to 10% vf = very fine

BORING: SB-60

LABELLA Associates, P.C.

300 STATE STREET, ROCHESTER, NY
ENVIRONMENTAL ENGINEERING CONSULTANTS

PROJECT
690 Saint Paul Street
Rochester, New York
BCP Site #C828159

BORING: **SB-61**
SHEET . OF
JOB: **209280**
CHKD BY: ED

CONTRACTOR: Nothnagle Drilling, Inc. BORING LOCATION: TIME: To
DRILLER: J. Swytzer GROUND SURFACE ELEVATION: DATUM:
LABELLA REPRESENTATIVE: E. Dumrese START DATE: 6/24/2010 END DATE: 6/24/10

TYPE OF DRILL RIG: Track Mounted Geoprobe Model 6610DT
AUGER SIZE AND TYPE: NA
OVERBURDEN SAMPLING METHOD: Direct Push
DRIVE SAMPLER TYPE: 4-foot Macrocore
INSIDE DIAMETER: ~1.8-Inch
OTHER:

DEPTH	SAMPLE NO. AND DEPTH	SAMPLE RECOVERY	STRATA CHANGE	VISUAL CLASSIFICATION	PID FIELD SCREEN (PPM)	LUDLUM FIELD SCREEN (µREM/H)
0	S-1 0' to 4'	3.2'	0.0'	Concrete		
				FILL MATERIALS	0.0	11
			0.3'	Black, cinders, coals, crushed Gravel, moist, no odor		
			0.6'	Light brown, SILT, little f Sand, moist, no odor		
2					0.0	9
4	S-2 4' - 8'	2.9'	4.0'	As above, moist, no odor	0.0	10
6			6.3'	As above, wet, no odor	0.0	8
8				*Refusal @ ~8.0' BGS*		
10						
12						
14						
16						
18						

WATER LEVEL DATA			BOTTOM OF	BOTTOM OF	GROUNDWATER
DATE	TIME	ELAPSED TIME	CASING	BORING	ENCOUNTERED
				8.0'	6.3'

NOTES:

GENERAL NOTES
1) STRATIFICATION LINES REPRESENT APPROXIMATE BOUNDARY BETWEEN SOIL TYPES, TRANSITIONS MAY BE GRADUAL.
2) WATER LEVEL READINGS HAVE BEEN MADE AT TIMES AND UNDER CONDITIONS STATED, FLUCTUATIONS OF GROUNDWATER
3) Abbreviations
and = 35 to 50 %
some = 20 to 35%
little = 10 to 20%
trace = 1 to 10%
c = coarse
m = medium
f = fine
vf = very fine
BGS = Below the Ground Surface
NA = Not Applicable

BORING: **SB-61**

LABELLA Associates, P.C.

300 STATE STREET, ROCHESTER, NY
ENVIRONMENTAL ENGINEERING CONSULTANTS

PROJECT
690 Saint Paul Street
Rochester, New York
BCP Site #C828159

BORING: SB-61(2)
SHEET . OF
JOB: 209280
CHKD BY: ED

CONTRACTOR: Nothnagle Drilling, Inc. BORING LOCATION: TIME: 1215 To 1245
DRILLER: J. Swytzer GROUND SURFACE ELEVATION: DATUM:
LABELLA REPRESENTATIVE: E. Dumrese START DATE: 9/24/2010 END DATE: 9/24/10

TYPE OF DRILL RIG: Track Mounted Geoprobe Model 6610DT
AUGER SIZE AND TYPE: NA
OVERBURDEN SAMPLING METHOD: Direct Push
DRIVE SAMPLER TYPE: 4-foot Macrocore
INSIDE DIAMETER: ~1.8-Inch
OTHER:

DEPTH	SAMPLE NO AND DEPTH	SAMPLE RECOVERY	STRATA CHANGE	VISUAL CLASSIFICATION	PID FIELD SCREEN (PPM)	LUDLUM FIELD SCREEN (µREM/H)
0	S-1 0' to 4'	2.2'	0.0'	Concrete		19
			0.3'	**FILL MATERIALS** Black, cinders, coals, moist, no odor	0.0	
			0.6'	Light brown, SILT, some mf Sand, moist, no odor		
2					0.0	58
			2.8'	Light brown, SILT, litle mf Sand, moist, no odor		
4	S-2 4' - 8'	1.9'	4.0'	As above, moist, no odor	0.0	39
			5.7'	As above, wet, no odor		
6					0.0	26
				Refusal @ ~7.7' BGS		
8	S-3 8' - 12'					
10						
12	S-4 12' - 16'					
14						
16	S-5 16' - 20'					
18						

WATER LEVEL DATA			BOTTOM OF CASING	BOTTOM OF BORING	GROUNDWATER ENCOUNTERED
DATE	TIME	ELAPSED TIME			
				7.7'	5.7'

NOTES:

GENERAL NOTES
1) STRATIFICATION LINES REPRESENT APPROXIMATE BOUNDARY BETWEEN SOIL TYPES, TRANSITIONS MAY BE GRADUAL.
2) WATER LEVEL READINGS HAVE BEEN MADE AT TIMES AND UNDER CONDITIONS STATED, FLUCTUATIONS OF GROUNDWATER
3) Abbreviations
and = 35 to 50 %
some = 20 to 35%
little = 10 to 20%
trace = 1 to 10%
c = coarse
m = medium
f = fine
vf = very fine
BGS = Below the Ground Surface
NA = Not Applicable

BORING: SB-61(2)

LABELLA Associates, P.C.

300 STATE STREET, ROCHESTER, NY
ENVIRONMENTAL ENGINEERING CONSULTANTS

PROJECT
690 Saint Paul Street
Rochester, New York
BCP Site #C828159

BORING: SB-62
SHEET . OF
JOB: 209280
CHKD BY: ED

CONTRACTOR: Nothnagle Drilling, Inc. BORING LOCATION: TIME: 1130 To 1200
DRILLER: J. Swytzer GROUND SURFACE ELEVATION: DATUM:
LABELLA REPRESENTATIVE: E. Dumrese START DATE: 9/24/2010 END DATE: 9/24/10

TYPE OF DRILL RIG: Track Mounted Geoprobe Model 6610DT
AUGER SIZE AND TYPE: NA
OVERBURDEN SAMPLING METHOD: Direct Push
DRIVE SAMPLER TYPE: 4-foot Macrocore
INSIDE DIAMETER: ~1.8-Inch
OTHER:

DEPTH	SAMPLE NO AND DEPTH	SAMPLE RECOVERY	STRATA CHANGE	VISUAL CLASSIFICATION	PID FIELD SCREEN (PPM)	LUDLUM FIELD SCREEN (µREM/H)
0	S-1 0' to 4'	3.8'	0.0'	Concrete		13
				FILL MATERIALS	0.0	
			0.2'	Black, cinders, coals, moist, no odor		
			0.4'	Brown, SILT and mf SAND, some Gravel, moist, no odor		
2					0.0	29
			2.9'	Brown, SILT, little f Sand, dry no odor		
4	S-2 4' - 8'	3.8'	4.0'	As above, moist, no odor	0.0	35
6					0.0	71
			6.2'	Light brown, mc SAND, wet, no odor		
				Refusal @ ~7.5' BGS		
8	S-3 8' - 12'					
10						
12	S-4 12' - 16'					
14						
16	S-5 16' - 20'					
18						

WATER LEVEL DATA			BOTTOM OF CASING	BOTTOM OF BORING	GROUNDWATER ENCOUNTERED
DATE	TIME	ELAPSED TIME			
				7.5'	6.2'

NOTES:

GENERAL NOTES
1) STRATIFICATION LINES REPRESENT APPROXIMATE BOUNDARY BETWEEN SOIL TYPES, TRANSITIONS MAY BE GRADUAL.
2) WATER LEVEL READINGS HAVE BEEN MADE AT TIMES AND UNDER CONDITIONS STATED, FLUCTUATIONS OF GROUNDWATER
3) Abbreviations

and = 35 to 50 %	c = coarse	
some = 20 to 35%	m = medium	BGS = Below the Ground Surface
little = 10 to 20%	f = fine	NA = Not Applicable
trace = 1 to 10%	vf = very fine	

BORING: SB-62

LABELLA Associates, P.C.

300 STATE STREET, ROCHESTER, NY
ENVIRONMENTAL ENGINEERING CONSULTANTS

PROJECT
690 Saint Paul Street
Rochester, New York
BCP Site #C828159

BORING: SB-63
SHEET . OF
JOB: 209280
CHKD BY: ED

CONTRACTOR: Nothnagle Drilling, Inc. BORING LOCATION: TIME: 1100 To 1130
DRILLER: J. Swytzer GROUND SURFACE ELEVATION: DATUM:
LABELLA REPRESENTATIVE: E. Dumrese START DATE: 9/23/2010 END DATE: 9/23/10

TYPE OF DRILL RIG: Track Mounted Geoprobe Model 6610DT
AUGER SIZE AND TYPE: NA
OVERBURDEN SAMPLING METHOD: Direct Push
DRIVE SAMPLER TYPE: 4-foot Macrocore
INSIDE DIAMETER: ~1.8-Inch
OTHER:

DEPTH	SAMPLE NO AND DEPTH	SAMPLE RECOVERY	STRATA CHANGE	VISUAL CLASSIFICATION	PID FIELD SCREEN (PPM)	LUDLUM FIELD SCREEN (µREM/H)
0	S-1 0' to 4'	3.3'	0.0'	Concrete		34
				FILL MATERIALS	0.0	
			0.3'	Black, cinders, coals, moist, no odor		
			1.6'	Light brown, SILT and mf SAND, some Gravel, moist, no odor		
2					0.0	72
			3.7'	Brown, SILT, little mf Sand, moist, no odor		
4	S-2 4' - 8'	3.1'	4.0'	As above, moist, no odor	0.0	18
6				**NATIVE SOIL (GLACIAL TILL)**	0.0	42
			6.7'	Light brown, SILT, some mf Sand and Gravel, moist, no odor		
				Refusal @ ~7.2' BGS		
8	S-3 8' - 12'					
10						
12	S-4 12' - 16'					
14						
16	S-5 16' - 20'					
18						

WATER LEVEL DATA			BOTTOM OF CASING	BOTTOM OF BORING	GROUNDWATER ENCOUNTERED
DATE	TIME	ELAPSED TIME			
				7.2'	No

NOTES:

GENERAL NOTES
1) STRATIFICATION LINES REPRESENT APPROXIMATE BOUNDARY BETWEEN SOIL TYPES, TRANSITIONS MAY BE GRADUAL.
2) WATER LEVEL READINGS HAVE BEEN MADE AT TIMES AND UNDER CONDITIONS STATED, FLUCTUATIONS OF GROUNDWATER
3) Abbreviations
and = 35 to 50 %
some = 20 to 35%
little = 10 to 20%
trace = 1 to 10%
c = coarse
m = medium
f = fine
vf = very fine
BGS = Below the Ground Surface
NA = Not Applicable

BORING: SB-63

LABELLA Associates, P.C.

300 STATE STREET, ROCHESTER, NY
ENVIRONMENTAL ENGINEERING CONSULTANTS

PROJECT
690 Saint Paul Street
Rochester, New York
BCP Site #C828159

BORING: SB-64
SHEET . OF
JOB: 209280
CHKD BY: ED

CONTRACTOR: Nothnagle Drilling, Inc. BORING LOCATION: TIME: To
DRILLER: J. Swytzer GROUND SURFACE ELEVATION: DATUM:
LABELLA REPRESENTATIVE: E. Dumrese START DATE: 6/24/2010 END DATE: 6/24/10

TYPE OF DRILL RIG: Track Mounted Geoprobe Model 6610DT DRIVE SAMPLER TYPE: 4-foot Macrocore
AUGER SIZE AND TYPE: NA INSIDE DIAMETER: ~1.8-Inch
OVERBURDEN SAMPLING METHOD: Direct Push OTHER:

DEPTH	SAMPLE NO. AND DEPTH	SAMPLE RECOVERY	STRATA CHANGE	VISUAL CLASSIFICATION	PID FIELD SCREEN (PPM)	LUDLUM FIELD SCREEN (µREM/H)
0	S-1 0' to 4'	3.0'	0.0'	Concrete		
				FILL MATERIALS	0.0	6
			0.3'	Black, cinders, coals, crushed Gravel, moist, no odor		
			0.7'	Light brown, SILT, trace f Sand and Gravel, miost, no odor		
2					0.0	9
4	S-2 4' - 8'	3.0'	4.0'	As above, moist, no odor	0.0	8
6					0.0	10
			6.5'	As above, wet, no odor		
8	S-3 8' - 12'		8.0'	As above, wet, no odor	0.0	8
				Refusal @ ~8.5' BGS		
10						
12						
14						
16						
18						

WATER LEVEL DATA			BOTTOM OF	BOTTOM OF	GROUNDWATER
DATE	TIME	ELAPSED TIME	CASING	BORING	ENCOUNTERED
				8.5'	6.5'

NOTES:

GENERAL NOTES
1) STRATIFICATION LINES REPRESENT APPROXIMATE BOUNDARY BETWEEN SOIL TYPES, TRANSITIONS MAY BE GRADUAL.
2) WATER LEVEL READINGS HAVE BEEN MADE AT TIMES AND UNDER CONDITIONS STATED, FLUCTUATIONS OF GROUNDWATER
3) Abbreviations
and = 35 to 50 % c = coarse
some = 20 to 35% m = medium BGS = Below the Ground Surface
little = 10 to 20% f = fine NA = Not Applicable
trace = 1 to 10% vf = very fine

BORING: SB-64

LABELLA Associates, P.C.

300 STATE STREET, ROCHESTER, NY
ENVIRONMENTAL ENGINEERING CONSULTANTS

PROJECT
690 Saint Paul Street
Rochester, New York
BCP Site #C828159

BORING: SB-65
SHEET SB-65 OF
JOB: 209280
CHKD BY: ED

CONTRACTOR: Nothnagle Drilling, Inc. BORING LOCATION: TIME: To
DRILLER: J. Swytzer GROUND SURFACE ELEVATION: DATUM:
LABELLA REPRESENTATIVE: E. Dumrese START DATE: 6/24/2010 END DATE: 6/24/10

TYPE OF DRILL RIG: Track Mounted Geoprobe Model 6610DT DRIVE SAMPLER TYPE: 4-foot Macrocore
AUGER SIZE AND TYPE: NA INSIDE DIAMETER: ~1.8-Inch
OVERBURDEN SAMPLING METHOD: Direct Push OTHER:

DEPTH	SAMPLE NO. AND DEPTH	SAMPLE RECOVERY	STRATA CHANGE	VISUAL CLASSIFICATION	PID FIELD SCREEN (PPM)	LUDLUM FIELD SCREEN (µREM/H)
0	S-1 0' to 4'	2..8'	0.0'	Grass/Topsoil		
			0.3'	Light brown, SILT, little mf Sand, moist, no odor	0.0	9
2					0.0	8
4	S-2 4' - 8'	1.6'	4.0'	As above, moist, no odor	0.0	10
				Refusal @ 5.5' BGS		
6						
8						
10						
12						
14						
16						
18						

WATER LEVEL DATA			BOTTOM OF	BOTTOM OF	GROUNDWATER
DATE	TIME	ELAPSED TIME	CASING	BORING	ENCOUNTERED
				5.5'	No

NOTES:

GENERAL NOTES
1) STRATIFICATION LINES REPRESENT APPROXIMATE BOUNDARY BETWEEN SOIL TYPES, TRANSITIONS MAY BE GRADUAL.
2) WATER LEVEL READINGS HAVE BEEN MADE AT TIMES AND UNDER CONDITIONS STATED, FLUCTUATIONS OF GROUNDWATER
3) Abbreviations
and = 35 to 50 % c = coarse
some = 20 to 35% m = medium BGS = Below the Ground Surface
little = 10 to 20% f = fine NA = Not Applicable
trace = 1 to 10% vf = very fine

BORING: SB-65

LABELLA Associates, P.C.

300 STATE STREET, ROCHESTER, NY
ENVIRONMENTAL ENGINEERING CONSULTANTS

PROJECT
690 Saint Paul Street
Rochester, New York
BCP Site #C828159

BORING: SB-66
SHEET SB-65 OF
JOB: 209280
CHKD BY: ED

CONTRACTOR: Nothnagle Drilling, Inc. BORING LOCATION: TIME: To
DRILLER: J. Swytzer GROUND SURFACE ELEVATION: DATUM:
LABELLA REPRESENTATIVE: E. Dumrese START DATE: 6/24/2010 END DATE: 6/24/10

TYPE OF DRILL RIG: Track Mounted Geoprobe Model 6610DT
AUGER SIZE AND TYPE: NA
OVERBURDEN SAMPLING METHOD: Direct Push
DRIVE SAMPLER TYPE: 4-foot Macrocore
INSIDE DIAMETER: ~1.8-Inch
OTHER:

DEPTH	SAMPLE NO AND DEPTH	SAMPLE RECOVERY	STRATA CHANGE	VISUAL CLASSIFICATION	PID FIELD SCREEN (PPM)	LUDLUM FIELD SCREEN (µREM/H)
0	S-1 0' to 4'	2.4'	0.0'	Grass/Topsoil		
			0.7'	Brown, SILT, some mf Sand, moist, no odor	0.0	9
2					0.0	11
4	S-2 4' - 8'	3.2'	4.0'	As above, moist, no odor	0.0	9
				Refusal @ 5.2' BGS		
6						
8						
10						
12						
14						
16						
18						

WATER LEVEL DATA			BOTTOM OF	BOTTOM OF	GROUNDWATER	NOTES:
DATE	TIME	ELAPSED TIME	CASING	BORING	ENCOUNTERED	
				5.2'	No	

GENERAL NOTES
1) STRATIFICATION LINES REPRESENT APPROXIMATE BOUNDARY BETWEEN SOIL TYPES, TRANSITIONS MAY BE GRADUAL.
2) WATER LEVEL READINGS HAVE BEEN MADE AT TIMES AND UNDER CONDITIONS STATED, FLUCTUATIONS OF GROUNDWATER
3) Abbreviations
and = 35 to 50 %
some = 20 to 35%
little = 10 to 20%
trace = 1 to 10%
c = coarse
m = medium
f = fine
vf = very fine
BGS = Below the Ground Surface
NA = Not Applicable

BORING: SB-66

LABELLA Associates, P.C.

300 STATE STREET, ROCHESTER, NY
ENVIRONMENTAL ENGINEERING CONSULTANTS

PROJECT
690 Saint Paul Street
Rochester, New York
BCP Site #C828159

BORING: **SB-67**
SHEET SB-65 OF
JOB: **209280**
CHKD BY: ED

CONTRACTOR: Nothnagle Drilling, Inc. BORING LOCATION: TIME: 1320 To 1400
DRILLER: J. Swytzer GROUND SURFACE ELEVATION: DATUM:
LABELLA REPRESENTATIVE: E. Dumrese START DATE: 6/22/2010 END DATE: 6/22/10

TYPE OF DRILL RIG: Track Mounted Geoprobe Model 6610DT
AUGER SIZE AND TYPE: NA
OVERBURDEN SAMPLING METHOD: Direct Push
DRIVE SAMPLER TYPE: 4-foot Macrocore
INSIDE DIAMETER: ~1.8-Inch
OTHER:

DEPTH	SAMPLE NO AND DEPTH	SAMPLE RECOVERY	STRATA CHANGE	VISUAL CLASSIFICATION	PID FIELD SCREEN (PPM)	LUDLUM FIELD SCREEN (µREM/H)
0	S-1 0' to 4'	3.3'	0.0'	Asphalt **FILL MATERIALS** Black, cinders, coals, crushed stone, moist, no odor	0.0	14
2			2.3'	**NATIVE SOIL** Light brown, SILT, little Clay, trace f Sand, moist, no odor	0.0	12
4	S-2 4' - 8'	4.0'	4.0'	As above, moist, no odor	0.0	13
6			6.7'	As above, wet, no odor	0.0	10
8	S-3 8' - 12'	4.0'	8.0'	As above, wet, no odor	0.0	13
10			10.0'	Grey, SILT and mf SAND, saturated, no odor	0	11
12	S-4 12' - 16'			*Refusal @ 12.0' BGS*		
14						
16	S-5 16' - 20'					
18						

WATER LEVEL DATA			BOTTOM OF	BOTTOM OF	GROUNDWATER
DATE	TIME	ELAPSED TIME	CASING	BORING	ENCOUNTERED
				12.0'	6.7'

NOTES:

GENERAL NOTES
1) STRATIFICATION LINES REPRESENT APPROXIMATE BOUNDARY BETWEEN SOIL TYPES, TRANSITIONS MAY BE GRADUAL.
2) WATER LEVEL READINGS HAVE BEEN MADE AT TIMES AND UNDER CONDITIONS STATED, FLUCTUATIONS OF GROUNDWATER
3) Abbreviations
and = 35 to 50 %
some = 20 to 35%
little = 10 to 20%
trace = 1 to 10%
c = coarse
m = medium
f = fine
vf = very fine
BGS = Below the Ground Surface
NA = Not Applicable

BORING: **SB-67**

LABELLA Associates, P.C.

300 STATE STREET, ROCHESTER, NY
ENVIRONMENTAL ENGINEERING CONSULTANTS

PROJECT
690 Saint Paul Street
Rochester, New York
BCP Site #C828159

BORING: SB-68
SHEET SB-65 OF
JOB: 209280
CHKD BY: ED

CONTRACTOR: Nothnagle Drilling, Inc. BORING LOCATION: TIME: 1320 To 1400
DRILLER: J. Swytzer GROUND SURFACE ELEVATION: DATUM:
LABELLA REPRESENTATIVE: E. Dumrese START DATE: 6/22/2010 END DATE: 6/22/10

TYPE OF DRILL RIG: Track Mounted Geoprobe Model 6610DT
AUGER SIZE AND TYPE: NA
OVERBURDEN SAMPLING METHOD: Direct Push
DRIVE SAMPLER TYPE: 4-foot Macrocore
INSIDE DIAMETER: ~1.8-Inch
OTHER:

DEPTH	SAMPLE NO AND DEPTH	SAMPLE RECOVERY	STRATA CHANGE	VISUAL CLASSIFICATION	PID FIELD SCREEN (PPM)	LUDLUM FIELD SCREEN (µREM/H)
0	S-1 0' to 4'	2.8'	0.0'	Asphalt		28
			0.2'	**FILL MATERIALS** Black, cinders, coals, foundry sand, moist, no odor	0.0	
2					0.0	110
			3.3'	Brown, mf SAND, little Silt, moist, no odor		
4	S-2 4' - 8'	4.0'	4.0'	As above, moist, no odor	0.0	25
6				**NATIVE SOIL (GLACIAI TILL)**	0.0	32
			6.3'	Light brown, SILT, some mf Sand and Gravel, wet, no odor		
8	S-3 8' - 12'	2.9'	8.0'	As above, moist, no odor	1.1	45
			9.5'	As above, wet, slight odor		
			10.3'	Grey, mc SAND, some Silt, saturated, no odor	112	86
10				*Refusal @ 10.8' BGS*		
12	S-4 12' - 16'					
14						
16	S-5 16' - 20'					
18						

WATER LEVEL DATA			BOTTOM OF CASING	BOTTOM OF BORING	GROUNDWATER ENCOUNTERED
DATE	TIME	ELAPSED TIME			
				10.8'	6.3'

NOTES:

GENERAL NOTES

1) STRATIFICATION LINES REPRESENT APPROXIMATE BOUNDARY BETWEEN SOIL TYPES, TRANSITIONS MAY BE GRADUAL.

2) WATER LEVEL READINGS HAVE BEEN MADE AT TIMES AND UNDER CONDITIONS STATED, FLUCTUATIONS OF GROUNDWATER

3) Abbreviations

and = 35 to 50 %	c = coarse	
some = 20 to 35%	m = medium	BGS = Below the Ground Surface
little = 10 to 20%	f = fine	NA = Not Applicable
trace = 1 to 10%	vf = very fine	

BORING: SB-68

LABELLA Associates, P.C.

300 STATE STREET, ROCHESTER, NY
ENVIRONMENTAL ENGINEERING CONSULTANTS

PROJECT
690 Saint Paul Street
Rochester, New York
BCP Site #C828159

BORING: SB-69
SHEET SB-65 OF
JOB: 209280
CHKD BY: ED

CONTRACTOR: Nothnagle Drilling, Inc. BORING LOCATION: TIME: 1300 To 1330
DRILLER: J. Swytzer GROUND SURFACE ELEVATION: DATUM:
LABELLA REPRESENTATIVE: E. Dumrese START DATE: 9/24/2010 END DATE: 9/24/2010

TYPE OF DRILL RIG: Track Mounted Geoprobe Model 6610DT
AUGER SIZE AND TYPE: NA
OVERBURDEN SAMPLING METHOD: Direct Push
DRIVE SAMPLER TYPE: 4-foot Macrocore
INSIDE DIAMETER: ~1.8-Inch
OTHER:

DEPTH	SAMPLE NO AND DEPTH	SAMPLE RECOVERY	STRATA CHANGE	VISUAL CLASSIFICATION	PID FIELD SCREEN (PPM)	LUDLUM FIELD SCREEN (µREM/H)
0	S-1 0' to 4'	2.5'	0.0'	Asphalt		
			0.3'	**FILL MATERIALS** Black, cinders, coals, Gravel sub-base, moist, no odor	0.0	52
2					0.0	94
			3.2'	Brown, SILT, some f Sand, moist, no odor		
4	S-2 4' - 8'	2.9'	4.0'	As above, moist, no odor	0.0	52
6					0.0	13
8	S-3 8' - 12'			*Refusal @ 8.0' BGS*		
10						
12	S-4 12' - 16'					
14						
16	S-5 16' - 20'					
18						

WATER LEVEL DATA			BOTTOM OF CASING	BOTTOM OF BORING	GROUNDWATER ENCOUNTERED
DATE	TIME	ELAPSED TIME			
				8.0'	No

NOTES:

GENERAL NOTES
1) STRATIFICATION LINES REPRESENT APPROXIMATE BOUNDARY BETWEEN SOIL TYPES, TRANSITIONS MAY BE GRADUAL.
2) WATER LEVEL READINGS HAVE BEEN MADE AT TIMES AND UNDER CONDITIONS STATED, FLUCTUATIONS OF GROUNDWATER
3) Abbreviations
and = 35 to 50 %
some = 20 to 35%
little = 10 to 20%
trace = 1 to 10%
c = coarse
m = medium
f = fine
vf = very fine
BGS = Below the Ground Surface
NA = Not Applicable

BORING: SB-69

LABELLA Associates, P.C.

300 STATE STREET, ROCHESTER, NY
ENVIRONMENTAL ENGINEERING CONSULTANTS

PROJECT
690 Saint Paul Street
Rochester, New York
BCP Site #C828159

BORING: SB-70
SHEET SB-65 OF
JOB: 209280
CHKD BY: ED

CONTRACTOR: Nothnagle Drilling, Inc. BORING LOCATION: TIME: 1300 To 1330
DRILLER: J. Swytzer GROUND SURFACE ELEVATION: DATUM:
LABELLA REPRESENTATIVE: E. Dumrese START DATE: 6/22/2010 END DATE: 6/22/10

TYPE OF DRILL RIG: Track Mounted Geoprobe Model 6610DT
AUGER SIZE AND TYPE: NA
OVERBURDEN SAMPLING METHOD: Direct Push
DRIVE SAMPLER TYPE: 4-foot Macrocore
INSIDE DIAMETER: ~1.8-Inch
OTHER:

DEPTH	SAMPLE NO AND DEPTH	SAMPLE RECOVERY	STRATA CHANGE	VISUAL CLASSIFICATION	PID FIELD SCREEN (PPM)	LUDLUM FIELD SCREEN (µREM/H)
0	S-1 0' to 4'	2.8'	0.0'	Asphalt		16
			0.5'	**FILL MATERIALS** Black, cinders, coals, crushed stone, moist, no odor	0.0	
2					0.0	21
4	S-2 4' - 8'	3.7'	4.0'	As above, moist, no odor	0.0	15
			5.5'	**NATIVE SOIL** Light brown, SILT, some mf Sand, moist, no odor		
6					0.0	17
8	S-3 8' - 12'	4.0'	8.0'	Crushed Gravel, saturated, no odor	0.0	14
			9.8'	Light brown, mc SAND, little Silt and Gravel, saturated, no odor		
10					0.0	17
12				*Refusal @ 11.5' BGS*		
14						
16						
18						

WATER LEVEL DATA			BOTTOM OF CASING	BOTTOM OF BORING	GROUNDWATER ENCOUNTERED
DATE	TIME	ELAPSED TIME			
				11.5'	8.0'

NOTES:

GENERAL NOTES
1) STRATIFICATION LINES REPRESENT APPROXIMATE BOUNDARY BETWEEN SOIL TYPES, TRANSITIONS MAY BE GRADUAL.
2) WATER LEVEL READINGS HAVE BEEN MADE AT TIMES AND UNDER CONDITIONS STATED, FLUCTUATIONS OF GROUNDWATER
3) Abbreviations
and = 35 to 50 %
some = 20 to 35%
little = 10 to 20%
trace = 1 to 10%
c = coarse
m = medium
f = fine
vf = very fine
BGS = Below the Ground Surface
NA = Not Applicable

BORING: SB-70

LABELLA Associates, P.C.

300 STATE STREET, ROCHESTER, NY
ENVIRONMENTAL ENGINEERING CONSULTANTS

PROJECT
690 Saint Paul Street
Rochester, New York
BCP Site #C828159

BORING: SB-71
SHEET OF
JOB: 209280
CHKD BY: ED

CONTRACTOR: Nothnagle Drilling, Inc. BORING LOCATION: TIME: 1430 To 1500
DRILLER: J. Swytzer GROUND SURFACE ELEVATION: DATUM:
LABELLA REPRESENTATIVE: E. Dumrese START DATE: 9/23/2010 END DATE: 9/23/2010

TYPE OF DRILL RIG: Track Mounted Geoprobe Model 6610DT
AUGER SIZE AND TYPE: NA
OVERBURDEN SAMPLING METHOD: Direct Push
DRIVE SAMPLER TYPE: 4-foot Macrocore
INSIDE DIAMETER: ~1.8-Inch
OTHER:

DEPTH	SAMPLE NO AND DEPTH	SAMPLE RECOVERY	STRATA CHANGE	VISUAL CLASSIFICATION	PID FIELD SCREEN (PPM)	LUDLUM FIELD SCREEN (µREM/H)
0	S-1 0' to 4'	2.9'	0.0'	Asphalt		49
			0.3'	**FILL MATERIALS** Brown, mc SAND and GRAVEL, some Silt, moist, no odor	0.0	
2			2.9'	Brown, SILT, little Clay, trace f Sand, moist, no odor	0.0	68
4	S-2 4' - 8'	4.0'	4.0'	As above, moist, no odor	0.0	32
				NATIVE SOIL (GLACIAL TILL)		
6			6.1'	Light brown, SILT, some mf Sand and Gravel, moist, no odor	0.0	92
			7.3'	As above, wet, no odor		
8	S-3 8' - 12'	4.0'	8.0'	As above, wet, no odor	0.0	53
10					0.0	13
12				*Refusal @ 11.3' BGS*		
14						
16						
18						

WATER LEVEL DATA			BOTTOM OF	BOTTOM OF	GROUNDWATER
DATE	TIME	ELAPSED TIME	CASING	BORING	ENCOUNTERED
				11.3'	7.3'

NOTES:

GENERAL NOTES
1) STRATIFICATION LINES REPRESENT APPROXIMATE BOUNDARY BETWEEN SOIL TYPES, TRANSITIONS MAY BE GRADUAL.
2) WATER LEVEL READINGS HAVE BEEN MADE AT TIMES AND UNDER CONDITIONS STATED, FLUCTUATIONS OF GROUNDWATER
3) Abbreviations
and = 35 to 50 %
some = 20 to 35%
little = 10 to 20%
trace = 1 to 10%
c = coarse
m = medium
f = fine
vf = very fine
BGS = Below the Ground Surface
NA = Not Applicable

BORING: SB-71

LABELLA Associates, P.C.

300 STATE STREET, ROCHESTER, NY
ENVIRONMENTAL ENGINEERING CONSULTANTS

PROJECT
690 Saint Paul Street
Rochester, New York
BCP Site #C828159

BORING: **SB-72**
SHEET OF
JOB: **209280**
CHKD BY: ED

CONTRACTOR: Nothnagle Drilling, Inc. BORING LOCATION: TIME: 1000 To 1020
DRILLER: J. Swytzer GROUND SURFACE ELEVATION: DATUM:
LABELLA REPRESENTATIVE: E. Dumrese START DATE: 6/22/2010 END DATE: 6/22/10

TYPE OF DRILL RIG: Track Mounted Geoprobe Model 6610DT DRIVE SAMPLER TYPE: 4-foot Macrocore
AUGER SIZE AND TYPE: NA INSIDE DIAMETER: ~1.8-Inch
OVERBURDEN SAMPLING METHOD: Direct Push OTHER:

DEPTH	SAMPLE NO. AND DEPTH	SAMPLE RECOVERY	STRATA CHANGE	VISUAL CLASSIFICATION	PID FIELD SCREEN (PPM)	LUDLUM FIELD SCREEN (µREM/H)
0	S-1 0' to 4'	4.0'	0.0'	Asphalt		8
			0.3'	**FILL MATERIALS** Black, cinders, coals, crushed stone, moist, no odor	0.0	
				NATIVE SOIL		
			1.8'	Light brown, Silt, little mf Sand, moist, no odor		
2					0.0	10
4	S-2 4' - 8'	4.0'	4.0'	As above, moist, no odor	0.0	11
6					0.0	16
8	S-3 8' - 12'	4.0'	8.0'	As above, moist, no odor	0.0	8
			9.0'	As above, saturated, no odor		
10					0.0	8
				Refusal @ 11.0' BGS		
12						
14						
16						
18						

WATER LEVEL DATA			BOTTOM OF	BOTTOM OF	GROUNDWATER
DATE	TIME	ELAPSED TIME	CASING	BORING	ENCOUNTERED
				11.0'	9.0'

NOTES:

GENERAL NOTES
1) STRATIFICATION LINES REPRESENT APPROXIMATE BOUNDARY BETWEEN SOIL TYPES, TRANSITIONS MAY BE GRADUAL.
2) WATER LEVEL READINGS HAVE BEEN MADE AT TIMES AND UNDER CONDITIONS STATED, FLUCTUATIONS OF GROUNDWATER
3) Abbreviations
and = 35 to 50 % c = coarse
some = 20 to 35% m = medium BGS = Below the Ground Surface
little = 10 to 20% f = fine NA = Not Applicable
trace = 1 to 10% vf = very fine

BORING: **SB-72**

LABELLA Associates, P.C.

300 STATE STREET, ROCHESTER, NY
ENVIRONMENTAL ENGINEERING CONSULTANTS

PROJECT
690 Saint Paul Street
Rochester, New York
BCP Site #C828159

BORING: SB-73
SHEET OF
JOB: 209280
CHKD BY: ED

CONTRACTOR: Nothnagle Drilling, Inc. BORING LOCATION: TIME: 1545 To 1615
DRILLER: J. Swytzer GROUND SURFACE ELEVATION: DATUM:
LABELLA REPRESENTATIVE: E. Dumrese START DATE: 9/23/2010 END DATE: 9/23/2010

TYPE OF DRILL RIG: Track Mounted Geoprobe Model 6610DT
AUGER SIZE AND TYPE: NA
OVERBURDEN SAMPLING METHOD: Direct Push
DRIVE SAMPLER TYPE: 4-foot Macrocore
INSIDE DIAMETER: ~1.8-Inch
OTHER:

DEPTH	SAMPLE NO AND DEPTH	SAMPLE RECOVERY	STRATA CHANGE	VISUAL CLASSIFICATION	PID FIELD SCREEN (PPM)	LUDLUM FIELD SCREEN (µREM/H)
0	S-1 0' to 4'	2.7'	0.0'	Asphalt		51
			0.3'	**FILL MATERIALS** Black, cinders, coals, crushed stone, moist, no odor	0.0	
2					0.0	98
			3.1'	**Ash Layer**		
			3.6'	Crushed Brick		
4	S-2 4' - 8'	1.9'	4.0'	As above, moist, no odor	0.0	105
			4.3'	Brown, SILT, some mf Sand and Gravel, wet, no odor		
6					0.0	128
				NATIVE SOIL (GLACIAL TILL)		
8	S-3 8' - 12'	2.1'	8.0'	Light brown, SILT, some mf Sand and Gravel, wet, no odor	0.0	39
10				*Refusal @ 10.8' BGS*	0.0	56
12						
14						
16						
18						

WATER LEVEL DATA			BOTTOM OF	BOTTOM OF	GROUNDWATER
DATE	TIME	ELAPSED TIME	CASING	BORING	ENCOUNTERED
				10.8'	8.0'

NOTES:

GENERAL NOTES
1) STRATIFICATION LINES REPRESENT APPROXIMATE BOUNDARY BETWEEN SOIL TYPES, TRANSITIONS MAY BE GRADUAL.
2) WATER LEVEL READINGS HAVE BEEN MADE AT TIMES AND UNDER CONDITIONS STATED, FLUCTUATIONS OF GROUNDWATER
3) Abbreviations
and = 35 to 50 %
some = 20 to 35%
little = 10 to 20%
trace = 1 to 10%
c = coarse
m = medium
f = fine
vf = very fine
BGS = Below the Ground Surface
NA = Not Applicable

BORING: SB-73

LABELLA Associates, P.C.

300 STATE STREET, ROCHESTER, NY
ENVIRONMENTAL ENGINEERING CONSULTANTS

PROJECT
690 Saint Paul Street
Rochester, New York
BCP Site #C828159

BORING: SB-74
SHEET OF
JOB: 209280
CHKD BY: ED

CONTRACTOR: Nothnagle Drilling, Inc. BORING LOCATION: TIME: 1540 To 1600
DRILLER: J. Swytzer GROUND SURFACE ELEVATION: DATUM:
LABELLA REPRESENTATIVE: E. Dumrese START DATE: 9/23/2010 END DATE: 9/23/2010

TYPE OF DRILL RIG: Track Mounted Geoprobe Model 6610DT
AUGER SIZE AND TYPE: NA
OVERBURDEN SAMPLING METHOD: Direct Push
DRIVE SAMPLER TYPE: 4-foot Macrocore
INSIDE DIAMETER: ~1.8-Inch
OTHER:

DEPTH	SAMPLE NO AND DEPTH	SAMPLE RECOVERY	STRATA CHANGE	VISUAL CLASSIFICATION	PID FIELD SCREEN (PPM)	LUDLUM FIELD SCREEN (µREM/H)
0	S-1 0' to 4'	2.5'	0.0'	Asphalt		74
			0.6'	**FILL MATERIALS** Black to grey, cinders, coals, brick, moist, no odor	0.0	
2					0.0	56
4	S-2 4' - 8'	2.2'	4.0'	Brown, SILT, little mf Sand, moist, no odor	0.0	61
6					0.0	16
8	S-3 8' - 12'	1.8'	8.0'	As above, wet, no odor	0.0	38
10				*Refusal @ 10.6' BGS*	0.0	16
12						
14						
16						
18						

WATER LEVEL DATA			BOTTOM OF CASING	BOTTOM OF BORING	GROUNDWATER ENCOUNTERED
DATE	TIME	ELAPSED TIME			
				10.6'	8.0'

NOTES:

GENERAL NOTES
1) STRATIFICATION LINES REPRESENT APPROXIMATE BOUNDARY BETWEEN SOIL TYPES, TRANSITIONS MAY BE GRADUAL.
2) WATER LEVEL READINGS HAVE BEEN MADE AT TIMES AND UNDER CONDITIONS STATED, FLUCTUATIONS OF GROUNDWATER
3) Abbreviations
and = 35 to 50 %
some = 20 to 35%
little = 10 to 20%
trace = 1 to 10%
c = coarse
m = medium
f = fine
vf = very fine
BGS = Below the Ground Surface
NA = Not Applicable

BORING: SB-74

LABELLA Associates, P.C.

300 STATE STREET, ROCHESTER, NY
ENVIRONMENTAL ENGINEERING CONSULTANTS

PROJECT
690 Saint Paul Street
Rochester, New York
BCP Site #C828159

BORING: SB-75
SHEET OF
JOB: 209280
CHKD BY: ED

CONTRACTOR: Nothnagle Drilling, Inc. BORING LOCATION: TIME: 800 To 830
DRILLER: J. Swytzer GROUND SURFACE ELEVATION: DATUM:
LABELLA REPRESENTATIVE: E. Dumrese START DATE: 9/27/2010 END DATE: 9/27/2010

TYPE OF DRILL RIG: Track Mounted Geoprobe Model 6610DT
AUGER SIZE AND TYPE: NA
OVERBURDEN SAMPLING METHOD: Direct Push
DRIVE SAMPLER TYPE: 4-foot Macrocore
INSIDE DIAMETER: ~1.8-Inch
OTHER:

DEPTH	SAMPLE NO AND DEPTH	SAMPLE RECOVERY	STRATA CHANGE	VISUAL CLASSIFICATION	PID FIELD SCREEN (PPM)	LUDLUM FIELD SCREEN (µREM/H)
0	S-1 0' to 4'	2.6'	0.0'	Grass/Topsoil		43
			0.5'	Brown, mc SAND, some Silt and c Gravel, moist, no odor	0.0	
2					0.0	16
4	S-2 4' - 8'	3.7'	4.0'	As above, moist, no odor	0.0	32
6			6.8'	As above, slight petroleum odor	3.0	18
				Refusal @ 7.5' BGS		
8						
10						
12						
14						
16						
18						

WATER LEVEL DATA			BOTTOM OF	BOTTOM OF	GROUNDWATER
DATE	TIME	ELAPSED TIME	CASING	BORING	ENCOUNTERED
				7.5'	No

NOTES:

GENERAL NOTES

1) STRATIFICATION LINES REPRESENT APPROXIMATE BOUNDARY BETWEEN SOIL TYPES, TRANSITIONS MAY BE GRADUAL.

2) WATER LEVEL READINGS HAVE BEEN MADE AT TIMES AND UNDER CONDITIONS STATED, FLUCTUATIONS OF GROUNDWATER

3) Abbreviations

and = 35 to 50 %	c = coarse	
some = 20 to 35%	m = medium	BGS = Below the Ground Surface
little = 10 to 20%	f = fine	NA = Not Applicable
trace = 1 to 10%	vf = very fine	

BORING: SB-75

LABELLA Associates, P.C.

300 STATE STREET, ROCHESTER, NY
ENVIRONMENTAL ENGINEERING CONSULTANTS

PROJECT
690 Saint Paul Street
Rochester, New York
BCP Site #C828159

BORING: SB-76
SHEET 1 OF
JOB: 209280
CHKD BY: ED

CONTRACTOR: Nothnagle Drilling, Inc. BORING LOCATION: TIME: TO
DRILLER: J. Swytzer GROUND SURFACE ELEVATION: DATUM:
LABELLA REPRESENTATIVE: E. Dumrese START DATE: 3/24/2010 END DATE: 3/24/10

TYPE OF DRILL RIG: Track Mounted Geoprobe Model 6610DT
AUGER SIZE AND TYPE: NA
OVERBURDEN SAMPLING METHOD: Direct Push
DRIVE SAMPLER TYPE: 4-foot Macrocore
INSIDE DIAMETER: ~1.8-Inch
OTHER:

DEPTH	SAMPLE NO AND DEPTH	SAMPLE RECOVERY	STRATA CHANGE	VISUAL CLASSIFICATION	PID FIELD SCREEN (PPM)	LUDLUM FIELD SCREEN (µREM/H)
0	S-1 0' to 4'	2.9'	0.0'	Topsoi/Grass		
			0.7'	Brown, mf SAND (black fill), moist, no odor	0.0	17
2					0.0	
			3.7'	Brown, mc SAND, some cinders and coals, moist, no odor		
4	S-2 4' - 8'	3.1'	4.0'	As above, moist, no odor	0.0	21
6			6.4'	As above, wet, no odor	0.0	
8				*Refusal @ 7.8' BGS*		
10						
12						
14						
16						
18						

WATER LEVEL DATA			BOTTOM OF	BOTTOM OF	GROUNDWATER
DATE	TIME	ELAPSED TIME	CASING	BORING	ENCOUNTERED
				7.8'	6.4'

NOTES:

GENERAL NOTES
1) STRATIFICATION LINES REPRESENT APPROXIMATE BOUNDARY BETWEEN SOIL TYPES, TRANSITIONS MAY BE GRADUAL.
2) WATER LEVEL READINGS HAVE BEEN MADE AT TIMES AND UNDER CONDITIONS STATED, FLUCTUATIONS OF GROUNDWATER
3) Abbreviations
and = 35 to 50 %
some = 20 to 35%
little = 10 to 20%
trace = 1 to 10%
c = coarse
m = medium
f = fine
vf = very fine
BGS = Below the Ground Surface
NA = Not Applicable

BORING: SB-76

LABELLA Associates, P.C.

300 STATE STREET, ROCHESTER, NY
ENVIRONMENTAL ENGINEERING CONSULTANTS

PROJECT
690 Saint Paul Street
Rochester, New York
BCP Site #C828159

BORING: SB-77
SHEET 1 OF
JOB: 209280
CHKD BY: ED

CONTRACTOR: Nothnagle Drilling, Inc. BORING LOCATION: TIME: 1000 TO 1030
DRILLER: J. Swytzer GROUND SURFACE ELEVATION: DATUM:
LABELLA REPRESENTATIVE: E. Dumrese START DATE: 3/24/2010 END DATE: 3/24/10

TYPE OF DRILL RIG: Track Mounted Geoprobe Model 6610DT
AUGER SIZE AND TYPE: NA
OVERBURDEN SAMPLING METHOD: Direct Push
DRIVE SAMPLER TYPE: 4-foot Macrocore
INSIDE DIAMETER: ~1.8-Inch
OTHER:

DEPTH	SAMPLE NO AND DEPTH	SAMPLE RECOVERY	STRATA CHANGE	VISUAL CLASSIFICATION	PID FIELD SCREEN (PPM)	LUDLUM FIELD SCREEN (µREM/H)
0	S-1 0' to 4'	2.9'	0.0'	Concrete		
			0.9'	Brown, SILT, little mf Sand and Gravel, moist, no odor	0.1	13
2					0.2	
4	S-2 4' - 8'	2.4'	4.0'	As above, moist, no odor	0.2	21
6					0.2	19
			7.3'	As above, saturated @ 7.3' BGS, no odor		
8		0.3'	8.0'	Greyish to brown, SILT, trace f Sand, saturated, no odor	0.2	
				Refusal @ ~ 8.9' BGS		
10						
12						
14						
16						
18						

WATER LEVEL DATA			BOTTOM OF	BOTTOM OF	GROUNDWATER
DATE	TIME	ELAPSED TIME	CASING	BORING	ENCOUNTERED
				8.9'	7.3'

NOTES:

GENERAL NOTES
1) STRATIFICATION LINES REPRESENT APPROXIMATE BOUNDARY BETWEEN SOIL TYPES, TRANSITIONS MAY BE GRADUAL.
2) WATER LEVEL READINGS HAVE BEEN MADE AT TIMES AND UNDER CONDITIONS STATED, FLUCTUATIONS OF GROUNDWATER
3) Abbreviations
and = 35 to 50 %
some = 20 to 35%
little = 10 to 20%
trace = 1 to 10%
c = coarse
m = medium
f = fine
vf = very fine
BGS = Below the Ground Surface
NA = Not Applicable

BORING: SB-77

LABELLA Associates, P.C.

300 STATE STREET, ROCHESTER, NY
ENVIRONMENTAL ENGINEERING CONSULTANTS

PROJECT
690 Saint Paul Street
Rochester, New York
BCP Site #C828159

BORING: SB-78
SHEET 1 OF
JOB: 209280
CHKD BY: ED

CONTRACTOR: Nothnagle Drilling, Inc. BORING LOCATION: TIME: 830 TO 900
DRILLER: J. Swytzer GROUND SURFACE ELEVATION: DATUM:
LABELLA REPRESENTATIVE: E. Dumrese START DATE: 9/27/2010 END DATE: 9/27/2010

TYPE OF DRILL RIG: Track Mounted Geoprobe Model 6610DT
AUGER SIZE AND TYPE: NA
OVERBURDEN SAMPLING METHOD: Direct Push
DRIVE SAMPLER TYPE: 4-foot Macrocore
INSIDE DIAMETER: ~1.8-Inch
OTHER:

DEPTH	SAMPLE NO AND DEPTH	SAMPLE RECOVERY	STRATA CHANGE	VISUAL CLASSIFICATION	PID FIELD SCREEN (PPM)	LUDLUM FIELD SCREEN (µREM/H)
0	S-1 0' to 4'	3.7'	0.0'	Grass/Topsoil		
				FILL MATERIALS		
			0.3'	Black, cinders, coals, moist, no odor	0.0	39
2			2.0'	Light brown, mc SAND, some Silt, moist, no odor	0.0	14
4	S-2 4' - 8'	2.3'	4.0'	As above, moist, no odor	0.0	43
6					21.6	54
			7.2'	Grey, SILT, little Gravel and mf Sand, wet, slight odor		
8				*Refusal @ ~ 8.0' BGS*		
10						
12						
14						
16						
18						

WATER LEVEL DATA			BOTTOM OF CASING	BOTTOM OF BORING	GROUNDWATER ENCOUNTERED
DATE	TIME	ELAPSED TIME			
				8.0'	7.2'

NOTES:

GENERAL NOTES
1) STRATIFICATION LINES REPRESENT APPROXIMATE BOUNDARY BETWEEN SOIL TYPES, TRANSITIONS MAY BE GRADUAL.
2) WATER LEVEL READINGS HAVE BEEN MADE AT TIMES AND UNDER CONDITIONS STATED, FLUCTUATIONS OF GROUNDWATER
3) Abbreviations
and = 35 to 50 %
some = 20 to 35%
little = 10 to 20%
trace = 1 to 10%
c = coarse
m = medium
f = fine
vf = very fine
BGS = Below the Ground Surface
NA = Not Applicable

BORING: SB-78

LABELLA Associates, P.C.

300 STATE STREET, ROCHESTER, NY
ENVIRONMENTAL ENGINEERING CONSULTANTS

PROJECT
690 Saint Paul Street
Rochester, New York
BCP Site #C828159

BORING: **SB-79**
SHEET 1 OF
JOB: **209280**
CHKD BY: ED

CONTRACTOR: Nothnagle Drilling, Inc. BORING LOCATION: TIME: 1245 TO 1315
DRILLER: J. Swytzer GROUND SURFACE ELEVATION: DATUM:
LABELLA REPRESENTATIVE: E. Dumrese START DATE: 3/25/2010 END DATE: 3/25/10

TYPE OF DRILL RIG: Track Mounted Geoprobe Model 6610DT
AUGER SIZE AND TYPE: NA
OVERBURDEN SAMPLING METHOD: Direct Push
DRIVE SAMPLER TYPE: 4-foot Macrocore
INSIDE DIAMETER: ~1.8-Inch
OTHER:

DEPTH	SAMPLE NO AND DEPTH	SAMPLE RECOVERY	STRATA CHANGE	VISUAL CLASSIFICATION	PID FIELD SCREEN (PPM)	LUDLUM FIELD SCREEN (µREM/H)
0	S-1 0' to 4'	2.0'	0.0'	Topsoi/Grass		
			0.5'	Brown, mc SAND, little Silt and Gravel, moist, no odor	0.0	20
2					0.2	
			3.4'	Gray, SILT, little mf Sand and Gravel, moist, no odor		
				Refusal @ ~3.5' BGS		
4						
6						
8						
10						
12						
14						
16						
18						

WATER LEVEL DATA			BOTTOM OF	BOTTOM OF	GROUNDWATER
DATE	TIME	ELAPSED TIME	CASING	BORING	ENCOUNTERED
				3.5'	No

NOTES:

GENERAL NOTES
1) STRATIFICATION LINES REPRESENT APPROXIMATE BOUNDARY BETWEEN SOIL TYPES, TRANSITIONS MAY BE GRADUAL.
2) WATER LEVEL READINGS HAVE BEEN MADE AT TIMES AND UNDER CONDITIONS STATED, FLUCTUATIONS OF GROUNDWATER
3) Abbreviations
and = 35 to 50 %
some = 20 to 35%
little = 10 to 20%
trace = 1 to 10%
c = coarse
m = medium
f = fine
vf = very fine
BGS = Below the Ground Surface
NA = Not Applicable

BORING: **SB-79**

LABELLA Associates, P.C.

300 STATE STREET, ROCHESTER, NY
ENVIRONMENTAL ENGINEERING CONSULTANTS

PROJECT
690 Saint Paul Street
Rochester, New York
BCP Site #C828159

BORING: **SB-80**
SHEET OF
JOB: **209280**
CHKD BY: ED

CONTRACTOR: Nothnagle Drilling, Inc. BORING LOCATION: TIME: 1145 TO 1215
DRILLER: J. Swytzer GROUND SURFACE ELEVATION: DATUM:
LABELLA REPRESENTATIVE: E. Dumrese START DATE: 3/25/2010 END DATE: 3/25/10

TYPE OF DRILL RIG: Track Mounted Geoprobe Model 6610DT DRIVE SAMPLER TYPE: 4-foot Macrocore
AUGER SIZE AND TYPE: NA INSIDE DIAMETER: ~1.8-Inch
OVERBURDEN SAMPLING METHOD: Direct Push OTHER:

DEPTH	SAMPLE NO. AND DEPTH	SAMPLE RECOVERY	STRATA CHANGE	VISUAL CLASSIFICATION	PID FIELD SCREEN (PPM)	LUDLUM FIELD SCREEN (µREM/H)
0	S-1 0' to 4'	1.6'	0.0'	Concrete		
			0.5'	Gray to light brown, mc SAND, Silt, moist, no odor	0.2	12
2					8.3	
				Refusal @ ~2.5' BGS		
4						
6						
8						
10						
12						
14						
16						
18						

WATER LEVEL DATA			BOTTOM OF CASING	BOTTOM OF BORING	GROUNDWATER ENCOUNTERED
DATE	TIME	ELAPSED TIME			
				2.5'	No

NOTES:

GENERAL NOTES
1) STRATIFICATION LINES REPRESENT APPROXIMATE BOUNDARY BETWEEN SOIL TYPES, TRANSITIONS MAY BE GRADUAL.
2) WATER LEVEL READINGS HAVE BEEN MADE AT TIMES AND UNDER CONDITIONS STATED, FLUCTUATIONS OF GROUNDWATER
3) Abbreviations
and = 35 to 50 % c = coarse
some = 20 to 35% m = medium BGS = Below the Ground Surface
little = 10 to 20% f = fine NA = Not Applicable
trace = 1 to 10% vf = very fine

BORING: **SB-80**

LABELLA Associates, P.C.

300 STATE STREET, ROCHESTER, NY
ENVIRONMENTAL ENGINEERING CONSULTANTS

PROJECT
690 Saint Paul Street
Rochester, New York
BCP Site #C828159

BORING: SB-81
SHEET OF
JOB: 209280
CHKD BY: ED

CONTRACTOR: Nothnagle Drilling, Inc. BORING LOCATION: TIME: 1145 TO 1215
DRILLER: J. Swytzer GROUND SURFACE ELEVATION: DATUM:
LABELLA REPRESENTATIVE: E. Dumrese START DATE: 9/27/2010 END DATE: 9/27/2010

TYPE OF DRILL RIG: Track Mounted Geoprobe Model 6610DT
AUGER SIZE AND TYPE: NA
OVERBURDEN SAMPLING METHOD: Direct Push
DRIVE SAMPLER TYPE: 4-foot Macrocore
INSIDE DIAMETER: ~1.8-Inch
OTHER:

DEPTH	SAMPLE NO AND DEPTH	SAMPLE RECOVERY	STRATA CHANGE	VISUAL CLASSIFICATION	PID FIELD SCREEN (PPM)	LUDLUM FIELD SCREEN (µREM/H)
0	S-1 0' to 4'	2.1'	0.0'	Grass/Topsoil		
			0.2'	Brown, mf SAND (Backfill), moist, no odor	0.0	13
2					0.0	29
4	S-2 4' - 8'	2.3'	4.0'	As above, moist, no odor	0.0	18
6			6.3'	As above, wet, no odor	0.0	47
				Refusal @ ~7.4' BGS		
8						
10						
12						
14						
16						
18						

WATER LEVEL DATA			BOTTOM OF	BOTTOM OF	GROUNDWATER
DATE	TIME	ELAPSED TIME	CASING	BORING	ENCOUNTERED
				7.4'	6.3'

NOTES:

GENERAL NOTES

1) STRATIFICATION LINES REPRESENT APPROXIMATE BOUNDARY BETWEEN SOIL TYPES, TRANSITIONS MAY BE GRADUAL.

2) WATER LEVEL READINGS HAVE BEEN MADE AT TIMES AND UNDER CONDITIONS STATED, FLUCTUATIONS OF GROUNDWATER

3) Abbreviations

and = 35 to 50 %	c = coarse	
some = 20 to 35%	m = medium	BGS = Below the Ground Surface
little = 10 to 20%	f = fine	NA = Not Applicable
trace = 1 to 10%	vf = very fine	

BORING: SB-81

LABELLA Associates, P.C.

300 STATE STREET, ROCHESTER, NY
ENVIRONMENTAL ENGINEERING CONSULTANTS

PROJECT
690 Saint Paul Street
Rochester, New York
BCP Site #C828159

BORING: SB-82
SHEET OF
JOB: 209280
CHKD BY: ED

CONTRACTOR: Nothnagle Drilling, Inc. BORING LOCATION: TIME: 1000 TO 1030
DRILLER: J. Swytzer GROUND SURFACE ELEVATION: DATUM:
LABELLA REPRESENTATIVE: E. Dumrese START DATE: 9/27/2010 END DATE: 9/27/2010

TYPE OF DRILL RIG: Track Mounted Geoprobe Model 6610DT
AUGER SIZE AND TYPE: NA
OVERBURDEN SAMPLING METHOD: Direct Push
DRIVE SAMPLER TYPE: 4-foot Macrocore
INSIDE DIAMETER: ~1.8-Inch
OTHER:

DEPTH	SAMPLE NO AND DEPTH	SAMPLE RECOVERY	STRATA CHANGE	VISUAL CLASSIFICATION	PID FIELD SCREEN (PPM)	LUDLUM FIELD SCREEN (µREM/H)
0	S-1 0' to 4'	3.3'	0.0'	Grass/Topsoil		
			0.2'	Brown, mf SAND, moist, no odor	0.0	39
2					0.0	55
4	S-2 4' - 8'	2.0'	4.0'	As above, moist, no odor	0.0	25
6			6.1'	As above, saturated, no odor	0.0	51
				Refusal @ ~7.4' BGS		
8						
10						
12						
14						
16						
18						

WATER LEVEL DATA			BOTTOM OF	BOTTOM OF	GROUNDWATER
DATE	TIME	ELAPSED TIME	CASING	BORING	ENCOUNTERED
				7.4'	6.1'

NOTES:

GENERAL NOTES
1) STRATIFICATION LINES REPRESENT APPROXIMATE BOUNDARY BETWEEN SOIL TYPES, TRANSITIONS MAY BE GRADUAL.
2) WATER LEVEL READINGS HAVE BEEN MADE AT TIMES AND UNDER CONDITIONS STATED, FLUCTUATIONS OF GROUNDWATER
3) Abbreviations
and = 35 to 50 %
some = 20 to 35%
little = 10 to 20%
trace = 1 to 10%
c = coarse
m = medium
f = fine
vf = very fine
BGS = Below the Ground Surface
NA = Not Applicable

BORING: SB-82

LABELLA Associates, P.C.

300 STATE STREET, ROCHESTER, NY
ENVIRONMENTAL ENGINEERING CONSULTANTS

PROJECT
690 Saint Paul Street
Rochester, New York
BCP Site #C828159

BORING: **SB-83**
SHEET 1 OF
JOB: **209280**
CHKD BY: ED

CONTRACTOR: Nothnagle Drilling, Inc. BORING LOCATION: TIME: TO
DRILLER: J. Swytzer GROUND SURFACE ELEVATION: DATUM:
LABELLA REPRESENTATIVE: E. Dumrese START DATE: 6/25/2010 END DATE: 6/25/10

TYPE OF DRILL RIG: Track Mounted Geoprobe Model 6610DT
AUGER SIZE AND TYPE: NA
OVERBURDEN SAMPLING METHOD: Direct Push
DRIVE SAMPLER TYPE: 4-foot Macrocore
INSIDE DIAMETER: ~1.8-Inch
OTHER:

DEPTH	SAMPLE NO AND DEPTH	SAMPLE RECOVERY	STRATA CHANGE	VISUAL CLASSIFICATION	PID FIELD SCREEN (PPM)	LUDLUM FIELD SCREEN (µREM/H)
0	S-1 0' to 4'	3.0'	0.0'	Topsoi/Grass		12.0
			0.3'	Brown, SILT, some mf Sand and Gravel, moist, no odor	0.0	
2					0.0	11
4	S-2 4' - 8'	2.6'	4.0'	As above, moist, no odor	0.0	9
6					0.0	7
8	S-3 8' - 12'	0.9'	8.0'	As above, wet, no odor	0.0	6
10				*Refusal @ 9.8' BGS*		
12						
14						
16						
18						

WATER LEVEL DATA			BOTTOM OF	BOTTOM OF	GROUNDWATER
DATE	TIME	ELAPSED TIME	CASING	BORING	ENCOUNTERED
				9.8'	8.0'

NOTES:

GENERAL NOTES
1) STRATIFICATION LINES REPRESENT APPROXIMATE BOUNDARY BETWEEN SOIL TYPES, TRANSITIONS MAY BE GRADUAL.
2) WATER LEVEL READINGS HAVE BEEN MADE AT TIMES AND UNDER CONDITIONS STATED, FLUCTUATIONS OF GROUNDWATER
3) Abbreviations
and = 35 to 50 %
some = 20 to 35%
little = 10 to 20%
trace = 1 to 10%
c = coarse
m = medium
f = fine
vf = very fine
BGS = Below the Ground Surface
NA = Not Applicable

BORING: **SB-83**

LABELLA Associates, P.C.

300 STATE STREET, ROCHESTER, NY
ENVIRONMENTAL ENGINEERING CONSULTANTS

PROJECT
690 Saint Paul Street
Rochester, New York
BCP Site #C828159

BORING: SB-84
SHEET 1 OF
JOB: 209280
CHKD BY: ED

CONTRACTOR: Nothnagle Drilling, Inc. BORING LOCATION: TIME: TO
DRILLER: J. Swytzer GROUND SURFACE ELEVATION: DATUM:
LABELLA REPRESENTATIVE: E. Dumrese START DATE: 6/25/2010 END DATE: 6/25/10

TYPE OF DRILL RIG: Track Mounted Geoprobe Model 6610DT
AUGER SIZE AND TYPE: NA
OVERBURDEN SAMPLING METHOD: Direct Push
DRIVE SAMPLER TYPE: 4-foot Macrocore
INSIDE DIAMETER: ~1.8-Inch
OTHER:

DEPTH	SAMPLE NO. AND DEPTH	SAMPLE RECOVERY	STRATA CHANGE	VISUAL CLASSIFICATION	PID FIELD SCREEN (PPM)	LUDLUM FIELD SCREEN (µREM/H)
0	S-1 0' to 4'	2.4'	0.0'	Topsoi/Grass		15
			0.4'	Brown, SILT and mf SAND, some crushed Gravel and cinders/coals, moist no odor	0.0	
2					0.0	13
4	S-2 4' - 8'	3.1'	4.0'	As above, moist, no odor	0.0	8
6					0.0	6
8	S-3 8' - 12'	1.1'	8.0'	As above, moist, no odor	0.0	8
			9.0'	Black, SILT and mf SAND, some Gravel, slight odor, wet		
10				*Refusal @ 10.6' BGS*		
12						
14						
16						
18						

WATER LEVEL DATA			BOTTOM OF CASING	BOTTOM OF BORING	GROUNDWATER ENCOUNTERED
DATE	TIME	ELAPSED TIME			
				10.6'	9.0'

NOTES:

GENERAL NOTES
1) STRATIFICATION LINES REPRESENT APPROXIMATE BOUNDARY BETWEEN SOIL TYPES, TRANSITIONS MAY BE GRADUAL.
2) WATER LEVEL READINGS HAVE BEEN MADE AT TIMES AND UNDER CONDITIONS STATED, FLUCTUATIONS OF GROUNDWATER
3) Abbreviations
and = 35 to 50 %
some = 20 to 35%
little = 10 to 20%
trace = 1 to 10%
c = coarse
m = medium
f = fine
vf = very fine
BGS = Below the Ground Surface
NA = Not Applicable

BORING: SB-84

LABELLA Associates, P.C.

300 STATE STREET, ROCHESTER, NY
ENVIRONMENTAL ENGINEERING CONSULTANTS

PROJECT
690 Saint Paul Street
Rochester, New York
BCP Site #C828159

BORING: SB-85
SHEET 1 OF
JOB: 209280
CHKD BY: ED

CONTRACTOR: Nothnagle Drilling, Inc. BORING LOCATION: TIME: 900 TO 920
DRILLER: J. Swytzer GROUND SURFACE ELEVATION: DATUM:
LABELLA REPRESENTATIVE: E. Dumrese START DATE: 6/25/2010 END DATE: 6/25/10

TYPE OF DRILL RIG: Track Mounted Geoprobe Model 6610DT
AUGER SIZE AND TYPE: NA
OVERBURDEN SAMPLING METHOD: Direct Push
DRIVE SAMPLER TYPE: 4-foot Macrocore
INSIDE DIAMETER: ~1.8-Inch
OTHER:

DEPTH	SAMPLE NO AND DEPTH	SAMPLE RECOVERY	STRATA CHANGE	VISUAL CLASSIFICATION	PID FIELD SCREEN (PPM)	LUDLUM FIELD SCREEN (µREM/H)
0	S-1 0' to 4'	1.9'	0.0'	Topsoi/Grass		13
			0.4'	Brown, SILT and mf SAND, some crushed Gravel and cinders/coals, moist no odor	0.0	
2					0.0	15
4	S-2 4' - 8'	0.8'	4.0'	As above, slight odor, moist	312	9
				Refusal @ 5.2' BGS		
6						
8						
10						
12						
14						
16						
18						

LEVEL DATA			BOTTOM OF	BOTTOM OF	GROUNDWATER
DATE	TIME	ELAPSED TIME	CASING	BORING	ENCOUNTERED
				5.2'	No

NOTES:

GENERAL NOTES
1) STRATIFICATION LINES REPRESENT APPROXIMATE BOUNDARY BETWEEN SOIL TYPES, TRANSITIONS MAY BE GRADUAL.
2) WATER LEVEL READINGS HAVE BEEN MADE AT TIMES AND UNDER CONDITIONS STATED, FLUCTUATIONS OF GROUNDWATER
3) Abbreviations
and = 35 to 50 %
some = 20 to 35%
little = 10 to 20%
trace = 1 to 10%
c = coarse
m = medium
f = fine
vf = very fine
BGS = Below the Ground Surface
NA = Not Applicable

BORING: SB-85

LABELLA Associates, P.C.

300 STATE STREET, ROCHESTER, NY
ENVIRONMENTAL ENGINEERING CONSULTANTS

PROJECT
690 Saint Paul Street
Rochester, New York
BCP Site #C828159

BORING: SB-86
SHEET 1 OF
JOB: 209280
CHKD BY: ED

CONTRACTOR: Nothnagle Drilling, Inc. BORING LOCATION: TIME: 830 TO 900
DRILLER: J. Swytzer GROUND SURFACE ELEVATION: DATUM:
LABELLA REPRESENTATIVE: E. Dumrese START DATE: 6/25/2010 END DATE: 6/25/10

TYPE OF DRILL RIG: Track Mounted Geoprobe Model 6610DT
AUGER SIZE AND TYPE: NA
OVERBURDEN SAMPLING METHOD: Direct Push
DRIVE SAMPLER TYPE: 4-foot Macrocore
INSIDE DIAMETER: ~1.8-Inch
OTHER:

DEPTH	SAMPLE NO AND DEPTH	SAMPLE RECOVERY	STRATA CHANGE	VISUAL CLASSIFICATION	PID FIELD SCREEN (PPM)	LUDLUM FIELD SCREEN (µREM/H)
0	S-1 0' to 4'	2.8'	0.0'	Topsoi/Grass		8
			0.3'	Brown to grey, SILT, little mf Sand and Gravel, moist, no odor	0.0	
2					0.0	7
4	S-2 4' - 8'	1.6'	4.0'	As above, wet, no odor	0.0	5
6					0.0	5
				Refusal @ 7.0' BGS		
8						
10						
12						
14						
16						
18						

LEVEL DATA			BOTTOM OF	BOTTOM OF	GROUNDWATER
DATE	TIME	ELAPSED TIME	CASING	BORING	ENCOUNTERED
				7.0'	No

NOTES:

GENERAL NOTES
1) STRATIFICATION LINES REPRESENT APPROXIMATE BOUNDARY BETWEEN SOIL TYPES, TRANSITIONS MAY BE GRADUAL.
2) WATER LEVEL READINGS HAVE BEEN MADE AT TIMES AND UNDER CONDITIONS STATED, FLUCTUATIONS OF GROUNDWATER
3) Abbreviations
and = 35 to 50 %
some = 20 to 35%
little = 10 to 20%
trace = 1 to 10%
c = coarse
m = medium
f = fine
vf = very fine
BGS = Below the Ground Surface
NA = Not Applicable

BORING: SB-86

LABELLA Associates, P.C.

300 STATE STREET, ROCHESTER, NY
ENVIRONMENTAL ENGINEERING CONSULTANTS

PROJECT
690 Saint Paul Street
Rochester, New York
BCP Site #C828159

BORING: SB-87
SHEET 1 OF
JOB: 209280
CHKD BY: ED

CONTRACTOR: Nothnagle Drilling, Inc. BORING LOCATION: TIME: TO
DRILLER: J. Swytzer GROUND SURFACE ELEVATION: DATUM:
LABELLA REPRESENTATIVE: E. Dumrese START DATE: 6/25/2010 END DATE: 6/25/10

TYPE OF DRILL RIG: Track Mounted Geoprobe Model 6610DT
AUGER SIZE AND TYPE: NA
OVERBURDEN SAMPLING METHOD: Direct Push
DRIVE SAMPLER TYPE: 4-foot Macrocore
INSIDE DIAMETER: ~1.8-Inch
OTHER:

DEPTH	SAMPLE NO. AND DEPTH	SAMPLE RECOVERY	STRATA CHANGE	VISUAL CLASSIFICATION	PID FIELD SCREEN (PPM)	LUDLUM FIELD SCREEN (µREM/H)
0	S-1 0' to 4'	2.8'	0.0'	Topsoi/Grass		10
			0.4'	Grey to brown, SILT, some mc Sand and Gravel, moist, no odor	0.0	
2					0.0	9
4	S-2 4' - 8'	0.8'	4.0'	As above, wet, no odor	0.0	8
				Refusal @ 5.2' BGS		
6						
8						
10						
12						
14						
16						
18						

LEVEL DATA			BOTTOM OF	BOTTOM OF	GROUNDWATER	NOTES:
DATE	TIME	ELAPSED TIME	CASING	BORING	ENCOUNTERED	
				5.2'	No	

GENERAL NOTES
1) STRATIFICATION LINES REPRESENT APPROXIMATE BOUNDARY BETWEEN SOIL TYPES, TRANSITIONS MAY BE GRADUAL.
2) WATER LEVEL READINGS HAVE BEEN MADE AT TIMES AND UNDER CONDITIONS STATED, FLUCTUATIONS OF GROUNDWATER
3) Abbreviations
and = 35 to 50 %
some = 20 to 35%
little = 10 to 20%
trace = 1 to 10%
c = coarse
m = medium
f = fine
vf = very fine
BGS = Below the Ground Surface
NA = Not Applicable

BORING: SB-87

LABELLA Associates, P.C.

300 STATE STREET, ROCHESTER, NY
ENVIRONMENTAL ENGINEERING CONSULTANTS

PROJECT
690 Saint Paul Street
Rochester, New York
BCP Site #C828159

BORING: SB-88
SHEET 1 OF
JOB: 209280
CHKD BY: ED

CONTRACTOR: Nothnagle Drilling, Inc. BORING LOCATION: TIME: TO
DRILLER: J. Swytzer GROUND SURFACE ELEVATION: DATUM:
LABELLA REPRESENTATIVE: E. Dumrese START DATE: 6/25/2010 END DATE: 6/25/10

TYPE OF DRILL RIG: Track Mounted Geoprobe Model 6610DT
AUGER SIZE AND TYPE: NA
OVERBURDEN SAMPLING METHOD: Direct Push
DRIVE SAMPLER TYPE: 4-foot Macrocore
INSIDE DIAMETER: ~1.8-Inch
OTHER:

DEPTH	SAMPLE NO. AND DEPTH	SAMPLE RECOVERY	STRATA CHANGE	VISUAL CLASSIFICATION	PID FIELD SCREEN (PPM)	LUDLUM FIELD SCREEN (µREM/H)
0	S-1 0' to 4'	2.9'	0.0'	Topsoi/Grass		10
			0.4'	Brown, SILT, some mf Sand and Gravel, moist, no odor	0.0	
2					0.0	8
4	S-2 4' - 8'	0.5'	4.0'	As above, wet, no odor	0.0	6
				Refusal @ 5.2' BGS		
6						
8						
10						
12						
14						
16						
18						

LEVEL DATA			BOTTOM OF	BOTTOM OF	GROUNDWATER	NOTES:
DATE	TIME	ELAPSED TIME	CASING	BORING	ENCOUNTERED	
				5.2'	No	

GENERAL NOTES
1) STRATIFICATION LINES REPRESENT APPROXIMATE BOUNDARY BETWEEN SOIL TYPES, TRANSITIONS MAY BE GRADUAL.
2) WATER LEVEL READINGS HAVE BEEN MADE AT TIMES AND UNDER CONDITIONS STATED, FLUCTUATIONS OF GROUNDWATER
3) Abbreviations
and = 35 to 50 %
some = 20 to 35%
little = 10 to 20%
trace = 1 to 10%
c = coarse
m = medium
f = fine
vf = very fine
BGS = Below the Ground Surface
NA = Not Applicable

BORING: SB-88

LABELLA Associates, P.C.

300 STATE STREET, ROCHESTER, NY
ENVIRONMENTAL ENGINEERING CONSULTANTS

PROJECT
690 Saint Paul Street
Rochester, New York
BCP Site #C828159

BORING: SB-91
SHEET 1 OF
JOB: 209280
CHKD BY: ED

CONTRACTOR: Nothnagle Drilling, Inc. BORING LOCATION: TIME: 930 TO 1000
DRILLER: J. Swytzer GROUND SURFACE ELEVATION: DATUM:
LABELLA REPRESENTATIVE: E. Dumrese START DATE: 9/22/2010 END DATE: 9/22/2010

TYPE OF DRILL RIG: Track Mounted Geoprobe Model 6610DT DRIVE SAMPLER TYPE: 4-foot Macrocore
AUGER SIZE AND TYPE: NA INSIDE DIAMETER: ~1.8-Inch
OVERBURDEN SAMPLING METHOD: Direct Push OTHER:

DEPTH	SAMPLE NO AND DEPTH	SAMPLE RECOVERY	STRATA CHANGE	VISUAL CLASSIFICATION	PID FIELD SCREEN (PPM)	LUDLUM FIELD SCREEN (µREM/H)
0	S-1 0' to 4'	3.2'	0.0'	Asphalt		35
				FILL MATERIALS		
			0.3'	Black, cinders, coals, crushe brick & concrete, moist, no odor	0.0	
2					0.0	46
4	S-2 4' - 8'	N/A	4.0'	Macro-core stuck in bore annulus - Boring terminated.		
6						
8				*Refusal @ 8.0' BGS*		
10						
12						
14						
16						
18						

LEVEL DATA			BOTTOM OF	BOTTOM OF	GROUNDWATER	NOTES:
DATE	TIME	ELAPSED TIME	CASING	BORING	ENCOUNTERED	
				8.0'	No	

GENERAL NOTES
1) STRATIFICATION LINES REPRESENT APPROXIMATE BOUNDARY BETWEEN SOIL TYPES, TRANSITIONS MAY BE GRADUAL.
2) WATER LEVEL READINGS HAVE BEEN MADE AT TIMES AND UNDER CONDITIONS STATED, FLUCTUATIONS OF GROUNDWATER
3) Abbreviations

and = 35 to 50 %	c = coarse	
some = 20 to 35%	m = medium	BGS = Below the Ground Surface
little = 10 to 20%	f = fine	NA = Not Applicable
trace = 1 to 10%	vf = very fine	

BORING: SB-91

LABELLA Associates, P.C.

300 STATE STREET, ROCHESTER, NY
ENVIRONMENTAL ENGINEERING CONSULTANTS

PROJECT
690 Saint Paul Street
Rochester, New York
BCP Site #C828159

BORING: SB-92
SHEET 1 OF
JOB: 209280
CHKD BY: ED

CONTRACTOR: Nothnagle Drilling, Inc. BORING LOCATION: TIME: 1030 TO 1100
DRILLER: J. Swytzer GROUND SURFACE ELEVATION: DATUM:
LABELLA REPRESENTATIVE: E. Dumrese START DATE: 9/22/2010 END DATE: 9/22/2010

TYPE OF DRILL RIG: Track Mounted Geoprobe Model 6610DT DRIVE SAMPLER TYPE: 4-foot Macrocore
AUGER SIZE AND TYPE: NA INSIDE DIAMETER: ~1.8-Inch
OVERBURDEN SAMPLING METHOD: Direct Push OTHER:

DEPTH	SAMPLE NO. AND DEPTH	SAMPLE RECOVERY	STRATA CHANGE	VISUAL CLASSIFICATION	PID FIELD SCREEN (PPM)	LUDLUM FIELD SCREEN (µREM/H)
0	S-1 0' to 4'	3.3'	0.0'	Asphalt		66
				FILL MATERIALS		
			0.3'	Black, cinders, coals, crushe brick & concrete, moist, no odor	0.0	
2					0.0	34
			2.8'	Brown, SILT, little mf Sand and Clay, moist, no odor		
4	S-2 4' - 8'	4.0'	4.0'	As above, moist, no odor	0.0	52
6					0.0	94
			8.0'	As above, slightly wet @~8.3' BGS		
8				*Refusal @ 8.3' BGS*		
10						
12						
14						
16						
18						

LEVEL DATA			BOTTOM OF	BOTTOM OF	GROUNDWATER	NOTES:
DATE	TIME	ELAPSED TIME	CASING	BORING	ENCOUNTERED	
				8.3'	8.0'	

GENERAL NOTES
1) STRATIFICATION LINES REPRESENT APPROXIMATE BOUNDARY BETWEEN SOIL TYPES, TRANSITIONS MAY BE GRADUAL.
2) WATER LEVEL READINGS HAVE BEEN MADE AT TIMES AND UNDER CONDITIONS STATED, FLUCTUATIONS OF GROUNDWATER
3) Abbreviations
and = 35 to 50 % c = coarse
some = 20 to 35% m = medium BGS = Below the Ground Surface
little = 10 to 20% f = fine NA = Not Applicable
trace = 1 to 10% vf = very fine

BORING: SB-92

LABELLA Associates, P.C.

300 STATE STREET, ROCHESTER, NY
ENVIRONMENTAL ENGINEERING CONSULTANTS

PROJECT
690 Saint Paul Street
Rochester, New York
BCP Site #C828159

BORING: SB-93
SHEET 1 OF
JOB: 209280
CHKD BY: ED

CONTRACTOR: Nothnagle Drilling, Inc. BORING LOCATION: TIME: 1140 TO 1215
DRILLER: J. Swytzer GROUND SURFACE ELEVATION: DATUM:
LABELLA REPRESENTATIVE: E. Dumrese START DATE: 9/22/2010 END DATE: 9/22/2010

TYPE OF DRILL RIG: Track Mounted Geoprobe Model 6610DT DRIVE SAMPLER TYPE: 4-foot Macrocore
AUGER SIZE AND TYPE: NA INSIDE DIAMETER: ~1.8-Inch
OVERBURDEN SAMPLING METHOD: Direct Push OTHER:

DEPTH	SAMPLE NO. AND DEPTH	SAMPLE RECOVERY	STRATA CHANGE	VISUAL CLASSIFICATION	PID FIELD SCREEN (PPM)	LUDLUM FIELD SCREEN (µREM/H)
0	S-1 0' to 4'	2.1'	0.0'	Asphalt		65
			0.4'	Brown, SILT, some Clay, moist, no odor	0.0	
2					0.0	13
4	S-2 4' - 8'	3.2'	4.0'	Brown, SILT and CLAY, wet @ ~4.5' BGS, no odor	0.0	33
6					1.4	95
			7.7'	As above, slight petroleum odor		
8		3.1'	8.0'	As above, slight petroleum odor, saturated	5.6	66
10					1.3	92
				Refusal @ 10.5' BGS		
12						
14						
16						
18						

LEVEL DATA			BOTTOM OF	BOTTOM OF	GROUNDWATER	NOTES:
DATE	TIME	ELAPSED TIME	CASING	BORING	ENCOUNTERED	
				10.5'	4.5'	

GENERAL NOTES
1) STRATIFICATION LINES REPRESENT APPROXIMATE BOUNDARY BETWEEN SOIL TYPES, TRANSITIONS MAY BE GRADUAL.
2) WATER LEVEL READINGS HAVE BEEN MADE AT TIMES AND UNDER CONDITIONS STATED, FLUCTUATIONS OF GROUNDWATER
3) Abbreviations
and = 35 to 50 % c = coarse
some = 20 to 35% m = medium BGS = Below the Ground Surface
little = 10 to 20% f = fine NA = Not Applicable
trace = 1 to 10% vf = very fine

BORING: SB-93

LABELLA Associates, P.C.

300 STATE STREET, ROCHESTER, NY
ENVIRONMENTAL ENGINEERING CONSULTANTS

PROJECT
690 Saint Paul Street
Rochester, New York
BCP Site #C828159

BORING: SB-94
SHEET 1 OF
JOB: 209280
CHKD BY: ED

CONTRACTOR: Nothnagle Drilling, Inc. BORING LOCATION: TIME: 745 TO 815
DRILLER: J. Swytzer GROUND SURFACE ELEVATION: DATUM:
LABELLA REPRESENTATIVE: E. Dumrese START DATE: 9/23/2010 END DATE: 9/23/2010

TYPE OF DRILL RIG: Track Mounted Geoprobe Model 6610DT DRIVE SAMPLER TYPE: 4-foot Macrocore
AUGER SIZE AND TYPE: NA INSIDE DIAMETER: ~1.8-Inch
OVERBURDEN SAMPLING METHOD: Direct Push OTHER:

DEPTH	SAMPLE NO. AND DEPTH	SAMPLE RECOVERY	STRATA CHANGE	VISUAL CLASSIFICATION	PID FIELD SCREEN (PPM)	LUDLUM FIELD SCREEN (µREM/H)
0	S-1 0' to 4'	3.1'	0.0'	Grass/Topsoil	0.0	26
			1.3'	Brown, mf SAND, little Silt, moist, no odor		
2			2.8'	Light brown, SILT, little f Sand, moist, no odor	0.0	8
4	S-2 4' - 8'	3.8'	4.0'	As above, moist, no odor	0.0	39
			5.4'	Light brown, SILT, some Clay, little mf Sand, moist, no odor		
6					0.0	12
			7.2'	**NATIVE SOIL (GLACIAL TILL)** Light brown, SILT, some Gravel and mf Sand, moist, no odor		
8		2.5'	8.0'	As above, moist, no odor	0.0	11
10			10.5'	As above, wet @~10.5' BGS	0.0	39
			11.4'	Weathered bedrock, no odor		
				Refusal @ 11.6' BGS		
12						
14						
16						
18						

LEVEL DATA			BOTTOM OF	BOTTOM OF	GROUNDWATER	NOTES:
DATE	TIME	ELAPSED TIME	CASING	BORING	ENCOUNTERED	
				11.6'	10.5'	

GENERAL NOTES
1) STRATIFICATION LINES REPRESENT APPROXIMATE BOUNDARY BETWEEN SOIL TYPES, TRANSITIONS MAY BE GRADUAL.
2) WATER LEVEL READINGS HAVE BEEN MADE AT TIMES AND UNDER CONDITIONS STATED, FLUCTUATIONS OF GROUNDWATER
3) Abbreviations

and = 35 to 50 %	c = coarse	
some = 20 to 35%	m = medium	BGS = Below the Ground Surface
little = 10 to 20%	f = fine	NA = Not Applicable
trace = 1 to 10%	vf = very fine	

BORING: SB-94

LABELLA Associates, P.C.

300 STATE STREET, ROCHESTER, NY
ENVIRONMENTAL ENGINEERING CONSULTANTS

PROJECT
690 Saint Paul Street
Rochester, New York
BCP Site #C828159

BORING: SB-95
SHEET 1 OF
JOB: 209280
CHKD BY: ED

CONTRACTOR: Nothnagle Drilling, Inc. BORING LOCATION: TIME: 845 TO 915
DRILLER: J. Swytzer GROUND SURFACE ELEVATION: DATUM:
LABELLA REPRESENTATIVE: E. Dumrese START DATE: 9/22/2010 END DATE: 9/22/2010

TYPE OF DRILL RIG: Track Mounted Geoprobe Model 6610DT
AUGER SIZE AND TYPE: NA
OVERBURDEN SAMPLING METHOD: Direct Push
DRIVE SAMPLER TYPE: 4-foot Macrocore
INSIDE DIAMETER: ~1.8-Inch
OTHER:

DEPTH	SAMPLE NO. AND DEPTH	SAMPLE RECOVERY	STRATA CHANGE	VISUAL CLASSIFICATION	PID FIELD SCREEN (PPM)	LUDLUM FIELD SCREEN (µREM/H)
0	S-1 0' to 4'	2.2'	0.0'	Concrete		34
			0.1'	Brown, mf SAND, trace Silt, dry, no odor	0.0	
2					0.0	12
			2.8'	Brown, SILT, little mf Sand, moist, no odor		
4	S-2 4' - 8'	3.1'	4.0'	As above, moist, no odor	0.0	10
				NATIVE SOIL (GLACIAL TILL)		
			5.6'	Light brown, SILT, little c Gravel and mf Sand, moist, no odor		
6					0.0	22
				Refusal @ 7.3' BGS		
8						
10						
12						
14						
16						
18						

LEVEL DATA			BOTTOM OF	BOTTOM OF	GROUNDWATER
DATE	TIME	ELAPSED TIME	CASING	BORING	ENCOUNTERED
				7.3'	No

NOTES:

GENERAL NOTES
1) STRATIFICATION LINES REPRESENT APPROXIMATE BOUNDARY BETWEEN SOIL TYPES, TRANSITIONS MAY BE GRADUAL.
2) WATER LEVEL READINGS HAVE BEEN MADE AT TIMES AND UNDER CONDITIONS STATED, FLUCTUATIONS OF GROUNDWATER
3) Abbreviations

and = 35 to 50 %	c = coarse	
some = 20 to 35%	m = medium	BGS = Below the Ground Surface
little = 10 to 20%	f = fine	NA = Not Applicable
trace = 1 to 10%	vf = very fine	

BORING: SB-95

LABELLA Associates, P.C.

300 STATE STREET, ROCHESTER, NY
ENVIRONMENTAL ENGINEERING CONSULTANTS

PROJECT
690 Saint Paul Street
Rochester, New York
BCP Site #C828159

BORING: SB-96
SHEET 1 OF
JOB: 209280
CHKD BY: ED

CONTRACTOR: Nothnagle Drilling, Inc. BORING LOCATION: TIME: 1650 TO 1700
DRILLER: J. Swytzer GROUND SURFACE ELEVATION: DATUM:
LABELLA REPRESENTATIVE: E. Dumrese START DATE: 9/22/2010 END DATE: 9/22/2010

TYPE OF DRILL RIG: Track Mounted Geoprobe Model 6610DT DRIVE SAMPLER TYPE: 4-foot Macrocore
AUGER SIZE AND TYPE: NA INSIDE DIAMETER: ~1.8-Inch
OVERBURDEN SAMPLING METHOD: Direct Push OTHER:

DEPTH	SAMPLE NO. AND DEPTH	SAMPLE RECOVERY	STRATA CHANGE	VISUAL CLASSIFICATION	PID FIELD SCREEN (PPM)	LUDLUM FIELD SCREEN (µREM/H)
0	S-1 0' to 4'	0.4'	0.0' 0.4'	Grass/Topsoil Brown, SILT, little mf Sand and clay, moist, no odor	0.0	33
2					0.0	59
4	S-2 4' - 8'	0.6'	4.0'	As above, moist, no odor	0.0	15
				Refusal @ 4.5' BGS		
6						
8						
10						
12						
14						
16						
18						

LEVEL DATA			BOTTOM OF	BOTTOM OF	GROUNDWATER	NOTES:
DATE	TIME	ELAPSED TIME	CASING	BORING	ENCOUNTERED	
				4.5'	No	

GENERAL NOTES
1) STRATIFICATION LINES REPRESENT APPROXIMATE BOUNDARY BETWEEN SOIL TYPES, TRANSITIONS MAY BE GRADUAL.
2) WATER LEVEL READINGS HAVE BEEN MADE AT TIMES AND UNDER CONDITIONS STATED, FLUCTUATIONS OF GROUNDWATER
3) Abbreviations and = 35 to 50 % c = coarse
some = 20 to 35% m = medium BGS = Below the Ground Surface
little = 10 to 20% f = fine NA = Not Applicable
trace = 1 to 10% vf = very fine

BORING: SB-96

LABELLA Associates, P.C.

300 STATE STREET, ROCHESTER, NY
ENVIRONMENTAL ENGINEERING CONSULTANTS

PROJECT
690 Saint Paul Street
Rochester, New York
BCP Site #C828159

BORING: SB-97
SHEET 1 OF
JOB: 209280
CHKD BY: ED

CONTRACTOR: Nothnagle Drilling, Inc. BORING LOCATION: TIME: 1700 TO 1730
DRILLER: J. Swytzer GROUND SURFACE ELEVATION: DATUM:
LABELLA REPRESENTATIVE: E. Dumrese START DATE: 9/22/2010 END DATE: 9/22/2010

TYPE OF DRILL RIG: Track Mounted Geoprobe Model 6610DT DRIVE SAMPLER TYPE: 4-foot Macrocore
AUGER SIZE AND TYPE: NA INSIDE DIAMETER: ~1.8-Inch
OVERBURDEN SAMPLING METHOD: Direct Push OTHER:

DEPTH	SAMPLE NO. AND DEPTH	SAMPLE RECOVERY	STRATA CHANGE	VISUAL CLASSIFICATION	PID FIELD SCREEN (PPM)	LUDLUM FIELD SCREEN (µREM/H)
0	S-1 0' to 4'	2.0'	0.0'	Grass/Topsoil		35
			0.2'	Brown, SILT, some mf Sand, moist, no odor	3.0	
			1.5'	Pea gravel, wet @ 1.5' BGS		
2					3.0	62
			3.0'	Brown to black, SILT and fill materials, wet, no odor		
4	S-2 4' - 8'	0.1'	4.0'	As above, moist, no odor	0.0	15
				Refusal @ 4.1' BGS		
6						
8						
10						
12						
14						
16						
18						

LEVEL DATA			BOTTOM OF	BOTTOM OF	GROUNDWATER	NOTES:
DATE	TIME	ELAPSED TIME	CASING	BORING	ENCOUNTERED	
				4.1'	No	

GENERAL NOTES
1) STRATIFICATION LINES REPRESENT APPROXIMATE BOUNDARY BETWEEN SOIL TYPES, TRANSITIONS MAY BE GRADUAL.
2) WATER LEVEL READINGS HAVE BEEN MADE AT TIMES AND UNDER CONDITIONS STATED, FLUCTUATIONS OF GROUNDWATER
3) Abbreviations

and = 35 to 50 %	c = coarse	
some = 20 to 35%	m = medium	BGS = Below the Ground Surface
little = 10 to 20%	f = fine	NA = Not Applicable
trace = 1 to 10%	vf = very fine	

BORING: SB-97

LABELLA Associates, P.C.

300 STATE STREET, ROCHESTER, NY
ENVIRONMENTAL ENGINEERING CONSULTANTS

PROJECT
690 Saint Paul Street
Rochester, New York
BCP Site #C828159

BORING: SB-98
SHEET 1 OF
JOB: 209280
CHKD BY: ED

CONTRACTOR: Nothnagle Drilling, Inc. BORING LOCATION: TIME: 1455 TO 1515
DRILLER: J. Swytzer GROUND SURFACE ELEVATION: DATUM:
LABELLA REPRESENTATIVE: E. Dumrese START DATE: 9/22/2010 END DATE: 9/22/2010

TYPE OF DRILL RIG: Track Mounted Geoprobe Model 6610DT DRIVE SAMPLER TYPE: 4-foot Macrocore
AUGER SIZE AND TYPE: NA INSIDE DIAMETER: ~1.8-Inch
OVERBURDEN SAMPLING METHOD: Direct Push OTHER:

DEPTH	SAMPLE NO. AND DEPTH	SAMPLE RECOVERY	STRATA CHANGE	VISUAL CLASSIFICATION	PID FIELD SCREEN (PPM)	LUDLUM FIELD SCREEN (µREM/H)
0	S-1 0' to 4'	1.5'	0.0'	Asphalt		125
			0.4'	Brown, mf SAND, little Silt, moist, no odor	3.0	
2					3.0	63
			3.7'	As above, wet @~3.7' BGS, no odor		
4	S-2 4' - 8'	3.4'	4.0'	As above, wet, no odor	0.0	97
6					0.0	32
				Refusal @ 7.7' BGS		
8						
10						
12						
14						
16						
18						

LEVEL DATA			BOTTOM OF	BOTTOM OF	GROUNDWATER	NOTES:
DATE	TIME	ELAPSED TIME	CASING	BORING	ENCOUNTERED	
				7.7'	3.7'	

GENERAL NOTES
1) STRATIFICATION LINES REPRESENT APPROXIMATE BOUNDARY BETWEEN SOIL TYPES, TRANSITIONS MAY BE GRADUAL.
2) WATER LEVEL READINGS HAVE BEEN MADE AT TIMES AND UNDER CONDITIONS STATED, FLUCTUATIONS OF GROUNDWATER
3) Abbreviations and = 35 to 50 % c = coarse
some = 20 to 35% m = medium BGS = Below the Ground Surface
little = 10 to 20% f = fine NA = Not Applicable
trace = 1 to 10% vf = very fine

BORING: SB-98

LABELLA Associates, P.C.

300 STATE STREET, ROCHESTER, NY
ENVIRONMENTAL ENGINEERING CONSULTANTS

PROJECT
690 Saint Paul Street
Rochester, New York
BCP Site #C828159

BORING: SB-99
SHEET 1 OF
JOB: 209280
CHKD BY: ED

CONTRACTOR: Nothnagle Drilling, Inc. BORING LOCATION: TIME: TO
DRILLER: J. Swytzer GROUND SURFACE ELEVATION: DATUM:
LABELLA REPRESENTATIVE: E. Dumrese START DATE: 9/22/2010 END DATE: 9/22/2010

TYPE OF DRILL RIG: Track Mounted Geoprobe Model 6610DT
AUGER SIZE AND TYPE: NA
OVERBURDEN SAMPLING METHOD: Direct Push
DRIVE SAMPLER TYPE: 4-foot Macrocore
INSIDE DIAMETER: ~1.8-Inch
OTHER:

DEPTH	SAMPLE NO. AND DEPTH	SAMPLE RECOVERY	STRATA CHANGE	VISUAL CLASSIFICATION	PID FIELD SCREEN (PPM)	LUDLUM FIELD SCREEN (µREM/H)
0				Shallow refusal - no recovery		
2						
4						
6						
8						
10						
12						
14						
16						
18						

LEVEL DATA			BOTTOM OF	BOTTOM OF	GROUNDWATER	NOTES:
DATE	TIME	ELAPSED TIME	CASING	BORING	ENCOUNTERED	
				0	No	

GENERAL NOTES

1) STRATIFICATION LINES REPRESENT APPROXIMATE BOUNDARY BETWEEN SOIL TYPES, TRANSITIONS MAY BE GRADUAL.

2) WATER LEVEL READINGS HAVE BEEN MADE AT TIMES AND UNDER CONDITIONS STATED, FLUCTUATIONS OF GROUNDWATER

3) Abbreviations

and = 35 to 50 %	c = coarse	
some = 20 to 35%	m = medium	BGS = Below the Ground Surface
little = 10 to 20%	f = fine	NA = Not Applicable
trace = 1 to 10%	vf = very fine	

BORING: SB-99

LABELLA Associates, P.C.

300 STATE STREET, ROCHESTER, NY
ENVIRONMENTAL ENGINEERING CONSULTANTS

PROJECT
690 Saint Paul Street
Rochester, New York
BCP Site #C828159

BORING: SB-100
SHEET 1 OF
JOB: 209280
CHKD BY: ED

CONTRACTOR: Nothnagle Drilling, Inc. BORING LOCATION: TIME: TO
DRILLER: J. Swytzer GROUND SURFACE ELEVATION: DATUM:
LABELLA REPRESENTATIVE: E. Dumrese START DATE: 9/22/2010 END DATE: 9/22/2010

TYPE OF DRILL RIG: Track Mounted Geoprobe Model 6610DT
AUGER SIZE AND TYPE: NA
OVERBURDEN SAMPLING METHOD: Direct Push
DRIVE SAMPLER TYPE: 4-foot Macrocore
INSIDE DIAMETER: ~1.8-Inch
OTHER:

DEPTH	SAMPLE NO. AND DEPTH	SAMPLE RECOVERY	STRATA CHANGE	VISUAL CLASSIFICATION	PID FIELD SCREEN (PPM)	LUDLUM FIELD SCREEN (µREM/H)
0	S-1 0' to 4'	2.5'	0.0'	Asphalt		32
			0.4'	Brown, mc SAND, moist, no odor	3.0	
2					130.0	44
			3.8'	Brown, mf SAND, some Silt, moist, petroleum odor		
4	S-2 4' - 8'	1.1'	4.0'	As above, wet, petroleum odor	139.0	76
				Refusal @ 5.3' BGS		
6						
8						
10						
12						
14						
16						
18						

LEVEL DATA			BOTTOM OF	BOTTOM OF	GROUNDWATER	NOTES:
DATE	TIME	ELAPSED TIME	CASING	BORING	ENCOUNTERED	
				5.3'	4.0'	

GENERAL NOTES
1) STRATIFICATION LINES REPRESENT APPROXIMATE BOUNDARY BETWEEN SOIL TYPES, TRANSITIONS MAY BE GRADUAL.
2) WATER LEVEL READINGS HAVE BEEN MADE AT TIMES AND UNDER CONDITIONS STATED, FLUCTUATIONS OF GROUNDWATER
3) Abbreviations
and = 35 to 50 %
some = 20 to 35%
little = 10 to 20%
trace = 1 to 10%
c = coarse
m = medium
f = fine
vf = very fine
BGS = Below the Ground Surface
NA = Not Applicable

BORING: SB-100

LABELLA Associates, P.C.

300 STATE STREET, ROCHESTER, NY
ENVIRONMENTAL ENGINEERING CONSULTANTS

PROJECT
690 Saint Paul Street
Rochester, New York
BCP Site #C828159

BORING: SB-101
SHEET 1 OF
JOB: 209280
CHKD BY: ED

CONTRACTOR: Nothnagle Drilling, Inc. BORING LOCATION: TIME: 1320 TO 1350
DRILLER: J. Swytzer GROUND SURFACE ELEVATION: DATUM:
LABELLA REPRESENTATIVE: E. Dumrese START DATE: 9/22/2010 END DATE: 9/22/2010

TYPE OF DRILL RIG: Track Mounted Geoprobe Model 6610DT DRIVE SAMPLER TYPE: 4-foot Macrocore
AUGER SIZE AND TYPE: NA INSIDE DIAMETER: ~1.8-Inch
OVERBURDEN SAMPLING METHOD: Direct Push OTHER:

DEPTH	SAMPLE NO. AND DEPTH	SAMPLE RECOVERY	STRATA CHANGE	)AL CLASSIFICATION	PID FIELD SCREEN (PPM)	LUDLUM FIELD SCREEN (µREM/H)
0	S-1 0' to 4'	2.7'	0.0'	Asphalt		92
			0.3'	Brown, mc SAND, some c Gravel, some fill materials (coals, cinders), moist, no odor	0.9	
2					0.9	112
			2.5'	Brown, mc SAND, little pink sandstone, moist, no odor		
			3.9'	Grey, SILT, moist, no odor		
4	S-2 4' - 8'	0.8'	4.0'	As above, wet, no odor	0.0	74
				Refusal @ 5.8" BGS		
6						
8						
10						
12						
14						
16						
18						

LEVEL DATA			BOTTOM OF	BOTTOM OF	GROUNDWATER	NOTES:
DATE	TIME	ELAPSED TIME	CASING	BORING	ENCOUNTERED	
				5.8'	4.0'	

GENERAL NOTES
1) STRATIFICATION LINES REPRESENT APPROXIMATE BOUNDARY BETWEEN SOIL TYPES, TRANSITIONS MAY BE GRADUAL.
2) WATER LEVEL READINGS HAVE BEEN MADE AT TIMES AND UNDER CONDITIONS STATED, FLUCTUATIONS OF GROUNDWATER
3) Abbreviations

and = 35 to 50 %	c = coarse	
some = 20 to 35%	m = medium	BGS = Below the Ground Surface
little = 10 to 20%	f = fine	NA = Not Applicable
trace = 1 to 10%	vf = very fine	

BORING: SB-101

LABELLA Associates, P.C.

300 STATE STREET, ROCHESTER, NY
ENVIRONMENTAL ENGINEERING CONSULTANTS

PROJECT
690 Saint Paul Street
Rochester, New York
BCP Site #C828159

BORING: SB-102
SHEET 1 OF
JOB: 209280
CHKD BY: ED

CONTRACTOR: Nothnagle Drilling, Inc. BORING LOCATION: TIME: 1100 TO 1130
DRILLER: J. Swytzer GROUND SURFACE ELEVATION: DATUM:
LABELLA REPRESENTATIVE: E. Dumrese START DATE: 9/27/2010 END DATE: 9/27/2010

TYPE OF DRILL RIG: Track Mounted Geoprobe Model 6610DT DRIVE SAMPLER TYPE: 4-foot Macrocore
AUGER SIZE AND TYPE: NA INSIDE DIAMETER: ~1.8-Inch
OVERBURDEN SAMPLING METHOD: Direct Push OTHER:

DEPTH	SAMPLE NO. AND DEPTH	SAMPLE RECOVERY	STRATA CHANGE	UAL CLASSIFICATION	PID FIELD SCREEN (PPM)	LUDLUM FIELD SCREEN (µREM/H)
0	S-1 0' to 4'	1.2'	0.0' 0.5'	Grass/Topsoil Brown, mc SAND and c GRAVEL, moist, no odor	0.0	22
2					0.0	45
				Refusal @ 3.8' BGS		
4						
6						
8						
10						
12						
14						
16						
18						

LEVEL DATA			BOTTOM OF	BOTTOM OF	GROUNDWATER	NOTES:
DATE	TIME	ELAPSED TIME	CASING	BORING	ENCOUNTERED	
				3.8'	No	

GENERAL NOTES

1) STRATIFICATION LINES REPRESENT APPROXIMATE BOUNDARY BETWEEN SOIL TYPES, TRANSITIONS MAY BE GRADUAL.

2) WATER LEVEL READINGS HAVE BEEN MADE AT TIMES AND UNDER CONDITIONS STATED, FLUCTUATIONS OF GROUNDWATER

3) Abbreviations

and = 35 to 50 %	c = coarse	
some = 20 to 35%	m = medium	BGS = Below the Ground Surface
little = 10 to 20%	f = fine	NA = Not Applicable
trace = 1 to 10%	vf = very fine	

BORING: SB-102

LABELLA Associates, P.C.

300 STATE STREET, ROCHESTER, NY
ENVIRONMENTAL ENGINEERING CONSULTANTS

PROJECT
690 Saint Paul Street
Rochester, New York
BCP Site #C828159

BORING: SB-103
SHEET 1 OF
JOB: 209280
CHKD BY: ED

CONTRACTOR: Nothnagle Drilling, Inc. BORING LOCATION: TIME: 1000 TO 1030
DRILLER: J. Swytzer GROUND SURFACE ELEVATION: DATUM:
LABELLA REPRESENTATIVE: E. Dumrese START DATE: 9/27/2010 END DATE: 9/27/2010

TYPE OF DRILL RIG: Track Mounted Geoprobe Model 6610DT DRIVE SAMPLER TYPE: 4-foot Macrocore
AUGER SIZE AND TYPE: NA INSIDE DIAMETER: ~1.8-Inch
OVERBURDEN SAMPLING METHOD: Direct Push OTHER:

DEPTH	SAMPLE NO. AND DEPTH	SAMPLE RECOVERY	STRATA CHANGE	UAL CLASSIFICATION	PID FIELD SCREEN (PPM)	LUDLUM FIELD SCREEN (µREM/H)
0	S-1 0' to 4'	1.1'	0.0'	Grass/Topsoil		91
			0.3'	Brown, mc SAND, some c Gravel, moist, no odor	0.0	
2					0.0	57
			3.4'	As above, wet, no odor		
4	S-2 4' - 8'	1.6'	4.0'	As above, wet, no odor	0.0	48
6			7.1'	Black, mc SAND, wet,odor	51.4	16
				Refusal @ 7.4' BGS		
8						
10						
12						
14						
16						
18						

LEVEL DATA			BOTTOM OF	BOTTOM OF	GROUNDWATER
DATE	TIME	ELAPSED TIME	CASING	BORING	ENCOUNTERED
				7.4'	3.4'

NOTES:

GENERAL NOTES
1) STRATIFICATION LINES REPRESENT APPROXIMATE BOUNDARY BETWEEN SOIL TYPES, TRANSITIONS MAY BE GRADUAL.
2) WATER LEVEL READINGS HAVE BEEN MADE AT TIMES AND UNDER CONDITIONS STATED, FLUCTUATIONS OF GROUNDWATER
3) Abbreviations
and = 35 to 50 % c = coarse
some = 20 to 35% m = medium BGS = Below the Ground Surface
little = 10 to 20% f = fine NA = Not Applicable
trace = 1 to 10% vf = very fine

BORING: SB-103

LABELLA Associates, P.C.

300 STATE STREET, ROCHESTER, NY
ENVIRONMENTAL ENGINEERING CONSULTANTS

PROJECT
690 Saint Paul Street
Rochester, New York
BCP Site #C828159

BORING: SB-104
SHEET 1 OF
JOB: 209280
CHKD BY: ED

CONTRACTOR: Nothnagle Drilling, Inc. BORING LOCATION: TIME: 930 TO 1000
DRILLER: J. Swytzer GROUND SURFACE ELEVATION: DATUM:
LABELLA REPRESENTATIVE: E. Dumrese START DATE: 9/27/2010 END DATE: 9/27/2010

TYPE OF DRILL RIG: Track Mounted Geoprobe Model 6610DT
AUGER SIZE AND TYPE: NA
OVERBURDEN SAMPLING METHOD: Direct Push
DRIVE SAMPLER TYPE: 4-foot Macrocore
INSIDE DIAMETER: ~1.8-Inch
OTHER:

DEPTH	SAMPLE NO. AND DEPTH	SAMPLE RECOVERY	STRATA CHANGE	VISUAL CLASSIFICATION	PID FIELD SCREEN (PPM)	LUDLUM FIELD SCREEN (µREM/H)
0	S-1 0' to 4'	1.1'	0.0'	Grass/Topsoil		24
				FILL MATERIALS		
			0.3'	Black, cinders, coals, slag, moist, no odor	0.0	
			0.6'	Brown, mf SAND, moist, no odor		
2					0.0	95
4	S-2 4' - 8'	1.6'	4.0'	As above, moist, no odor	0.0	33
6			6.4'	Grey to black, mf SAND and SILT, wet, petroleum odor	3.7	45
				Refusal @ 7.3' BGS		
8						
10						
12						
14						
16						
18						

LEVEL DATA			BOTTOM OF	BOTTOM OF	GROUNDWATER	NOTES:
DATE	TIME	ELAPSED TIME	CASING	BORING	ENCOUNTERED	
				7.3'	6.4'	

GENERAL NOTES
1) STRATIFICATION LINES REPRESENT APPROXIMATE BOUNDARY BETWEEN SOIL TYPES, TRANSITIONS MAY BE GRADUAL.
2) WATER LEVEL READINGS HAVE BEEN MADE AT TIMES AND UNDER CONDITIONS STATED, FLUCTUATIONS OF GROUNDWATER
3) Abbreviations

and = 35 to 50 %	c = coarse	
some = 20 to 35%	m = medium	BGS = Below the Ground Surface
little = 10 to 20%	f = fine	NA = Not Applicable
trace = 1 to 10%	vf = very fine	

BORING: SB-104

LABELLA Associates, P.C.

300 STATE STREET, ROCHESTER, NY
ENVIRONMENTAL ENGINEERING CONSULTANTS

PROJECT
690 Saint Paul Street
Rochester, New York
BCP Site #C828159

BORING: SB-105
SHEET 1 OF
JOB: 209280
CHKD BY: ED

CONTRACTOR: Nothnagle Drilling, Inc. BORING LOCATION: TIME: 930 TO 1000
DRILLER: J. Swytzer GROUND SURFACE ELEVATION: DATUM:
LABELLA REPRESENTATIVE: E. Dumrese START DATE: 9/27/2010 END DATE: 9/27/2010

TYPE OF DRILL RIG: Track Mounted Geoprobe Model 6610DT DRIVE SAMPLER TYPE: 4-foot Macrocore
AUGER SIZE AND TYPE: NA INSIDE DIAMETER: ~1.8-Inch
OVERBURDEN SAMPLING METHOD: Direct Push OTHER:

DEPTH	SAMPLE NO. AND DEPTH	SAMPLE RECOVERY	STRATA CHANGE	UAL CLASSIFICATION	PID FIELD SCREEN (PPM)	LUDLUM FIELD SCREEN (µREM/H)
0	S-1 0' to 4'	2.8'	0.0'	Grass/Topsoil		31
			0.3'	Brown, mf SAND, moist, no odor	0.0	
2					0.0	47
4	S-2 4' - 8'	3.2'	4.0'	As above, moist, no odor	0.0	8
6			6.2'	As above, wet, no odor	0.0	84
8				*Refusal @ 8.0' BGS*		
10						
12						
14						
16						
18						

LEVEL DATA			BOTTOM OF	BOTTOM OF	GROUNDWATER	NOTES:
DATE	TIME	ELAPSED TIME	CASING	BORING	ENCOUNTERED	
				8.0'	6.2'	

GENERAL NOTES
1) STRATIFICATION LINES REPRESENT APPROXIMATE BOUNDARY BETWEEN SOIL TYPES, TRANSITIONS MAY BE GRADUAL.
2) WATER LEVEL READINGS HAVE BEEN MADE AT TIMES AND UNDER CONDITIONS STATED, FLUCTUATIONS OF GROUNDWATER
3) Abbreviations

and = 35 to 50 %	c = coarse	
some = 20 to 35%	m = medium	BGS = Below the Ground Surface
little = 10 to 20%	f = fine	NA = Not Applicable
trace = 1 to 10%	vf = very fine	

BORING: SB-105

LABELLA Associates, P.C.

300 STATE STREET, ROCHESTER, NY
ENVIRONMENTAL ENGINEERING CONSULTANTS

PROJECT
690 Saint Paul Street
Rochester, New York
BCP Site #C828159

BORING: SB-106A
SHEET 1 OF
JOB: 209280
CHKD BY: ED

CONTRACTOR: Nothnagle Drilling, Inc. BORING LOCATION: TIME: 1330 TO 1400
DRILLER: J. Swytzer GROUND SURFACE ELEVATION: DATUM:
LABELLA REPRESENTATIVE: E. Dumrese START DATE: 10/7/2010 END DATE: 10/7/2010

TYPE OF DRILL RIG: Track Mounted Geoprobe Model 6610DT
AUGER SIZE AND TYPE: NA
OVERBURDEN SAMPLING METHOD: Direct Push
DRIVE SAMPLER TYPE: 4-foot Macrocore
INSIDE DIAMETER: ~1.8-Inch
OTHER:

DEPTH	SAMPLE NO. AND DEPTH	SAMPLE RECOVERY	STRATA CHANGE	UAL CLASSIFICATION	PID FIELD SCREEN (PPM)	LUDLUM FIELD SCREEN (µREM/H)
0	S-1 0' to 4'	2.3'	0.0'	Asphalt		5
				FILL MATERIALS		
			0.3'	Black, cinders, coals, slag, moist, no odor	0.0	
2					0.0	52
			2.8'	Brown, SILT, little mf Sand, moist, no odor		
4	S-2 4' - 8'	0.6'	4.0'	As above, moist, no odor	0.0	65
6					0.0	19
8		3.0'	8.0'	As above, moist, no odor	0.0	54
10					2.9	34
				Refusal @ 11.9' BGS		
12						
14						
16						
18						

LEVEL DATA			BOTTOM OF	BOTTOM OF	GROUNDWATER	NOTES:
DATE	TIME	ELAPSED TIME	CASING	BORING	ENCOUNTERED	
				11.9'	No	

GENERAL NOTES
1) STRATIFICATION LINES REPRESENT APPROXIMATE BOUNDARY BETWEEN SOIL TYPES, TRANSITIONS MAY BE GRADUAL.
2) WATER LEVEL READINGS HAVE BEEN MADE AT TIMES AND UNDER CONDITIONS STATED, FLUCTUATIONS OF GROUNDWATER
3) Abbreviations
and = 35 to 50 %
some = 20 to 35%
little = 10 to 20%
trace = 1 to 10%
c = coarse
m = medium
f = fine
vf = very fine
BGS = Below the Ground Surface
NA = Not Applicable

BORING: SB-106A

LABELLA Associates, P.C.

300 STATE STREET, ROCHESTER, NY
ENVIRONMENTAL ENGINEERING CONSULTANTS

PROJECT
690 Saint Paul Street
Rochester, New York
BCP Site #C828159

BORING: SB-107
SHEET 1 OF
JOB: 209280
CHKD BY: ED

CONTRACTOR: Nothnagle Drilling, Inc. BORING LOCATION: TIME: 930 TO 1000
DRILLER: J. Swytzer GROUND SURFACE ELEVATION: DATUM:
LABELLA REPRESENTATIVE: E. Dumrese START DATE: 9/26/2010 END DATE: 9/26/2010

TYPE OF DRILL RIG: Track Mounted Geoprobe Model 6610DT
AUGER SIZE AND TYPE: NA
OVERBURDEN SAMPLING METHOD: Direct Push
DRIVE SAMPLER TYPE: 4-foot Macrocore
INSIDE DIAMETER: ~1.8-Inch
OTHER:

DEPTH	SAMPLE NO. AND DEPTH	SAMPLE RECOVERY	STRATA CHANGE	VISUAL CLASSIFICATION	PID FIELD SCREEN (PPM)	LUDLUM FIELD SCREEN (µREM/H)
0	S-1 0' to 4'	1.9'	0.0'	Asphalt		110
			0.4'	Brown, SILT, little f Sand and Gravel, moist, no odor	0.0	
2					0.0	65
4	S-2 4' - 8'	2.0'	4.0'	As above, moist, no odor	0.0	16
6					0.0	92
8	S-3 8'-12'	1.2'	8.0'	Light brown, SILT, some mf Sand, little Gravel, wet, no odor	0.0	83
10					0.0	33
12				*Refusal @ 12.1' BGS*		
14						
16						
18						

LEVEL DATA			BOTTOM OF CASING	BOTTOM OF BORING	GROUNDWATER ENCOUNTERED
DATE	TIME	ELAPSED TIME			
				12.1'	8.0'

NOTES:

GENERAL NOTES
1) STRATIFICATION LINES REPRESENT APPROXIMATE BOUNDARY BETWEEN SOIL TYPES, TRANSITIONS MAY BE GRADUAL.
2) WATER LEVEL READINGS HAVE BEEN MADE AT TIMES AND UNDER CONDITIONS STATED, FLUCTUATIONS OF GROUNDWATER
3) Abbreviations
and = 35 to 50 %
some = 20 to 35%
little = 10 to 20%
trace = 1 to 10%
c = coarse
m = medium
f = fine
vf = very fine
BGS = Below the Ground Surface
NA = Not Applicable

BORING: SB-107

LABELLA Associates, P.C.

300 STATE STREET, ROCHESTER, NY
ENVIRONMENTAL ENGINEERING CONSULTANTS

PROJECT
690 Saint Paul Street
Rochester, New York
BCP Site #C828159

BORING: SB-108
SHEET 1 OF
JOB: 209280
CHKD BY: ED

CONTRACTOR: Nothnagle Drilling, Inc. BORING LOCATION: TIME: 930 TO 1000
DRILLER: J. Swytzer GROUND SURFACE ELEVATION: DATUM:
LABELLA REPRESENTATIVE: E. Dumrese START DATE: 9/28/2010 END DATE: 9/28/2010

TYPE OF DRILL RIG: Track Mounted Geoprobe Model 6610DT
AUGER SIZE AND TYPE: NA
OVERBURDEN SAMPLING METHOD: Direct Push
DRIVE SAMPLER TYPE: 4-foot Macrocore
INSIDE DIAMETER: ~1.8-Inch
OTHER:

DEPTH	SAMPLE NO. AND DEPTH	SAMPLE RECOVERY	STRATA CHANGE	UAL CLASSIFICATION	PID FIELD SCREEN (PPM)	LUDLUM FIELD SCREEN (µREM/H)
0	S-1 0' to 4'	1.8'	0.0'	Grass/Topsoil		19
			0.3'	Brown, SILT, moist, no odor	0.0	
2				*Refusal @ 2.0' BGS*		
4						
6						
8						
10						
12						
14						
16						
18						

LEVEL DATA			BOTTOM OF	BOTTOM OF	GROUNDWATER	NOTES:
DATE	TIME	ELAPSED TIME	CASING	BORING	ENCOUNTERED	
				2.0'	No	

GENERAL NOTES
1) STRATIFICATION LINES REPRESENT APPROXIMATE BOUNDARY BETWEEN SOIL TYPES, TRANSITIONS MAY BE GRADUAL.
2) WATER LEVEL READINGS HAVE BEEN MADE AT TIMES AND UNDER CONDITIONS STATED, FLUCTUATIONS OF GROUNDWATER
3) Abbreviations

and = 35 to 50 %	c = coarse	
some = 20 to 35%	m = medium	BGS = Below the Ground Surface
little = 10 to 20%	f = fine	NA = Not Applicable
trace = 1 to 10%	vf = very fine	

BORING: SB-108

LABELLA Associates, P.C.

300 STATE STREET, ROCHESTER, NY
ENVIRONMENTAL ENGINEERING CONSULTANTS

PROJECT
690 Saint Paul Street
Rochester, New York
BCP Site #C828159

BORING: SB-119
SHEET 1 OF
JOB: 209280
CHKD BY: ED

CONTRACTOR: Nothnagle Drilling, Inc. BORING LOCATION: TIME: 1030 TO 1100
DRILLER: J. Swytzer GROUND SURFACE ELEVATION: DATUM:
LABELLA REPRESENTATIVE: E. Dumrese START DATE: 10/7/2010 END DATE: 10/7/2010

TYPE OF DRILL RIG: Track Mounted Geoprobe Model 6610DT DRIVE SAMPLER TYPE: 4-foot Macrocore
AUGER SIZE AND TYPE: NA INSIDE DIAMETER: ~1.8-Inch
OVERBURDEN SAMPLING METHOD: Direct Push OTHER:

DEPTH	SAMPLE NO. AND DEPTH	SAMPLE RECOVERY	STRATA CHANGE	UAL CLASSIFICATION	PID FIELD SCREEN (PPM)	LUDLUM FIELD SCREEN (µREM/H)
0	S-1 0' to 4'	2.3'	0.0'	Asphalt		23
			0.2'	Light brown to grey, SILT, some mf Sand and Gravel, dry, no odor	0.0	
2					0.0	5
			3.1'	Brown, SILT, trace Clay and f Sand, moist, no odor		
4	S-2 4'-8'	2.4'	4.0'	As above, moist, no odor	0.0	36
6					0.0	98
			6.6'	Brown, SILT, little mf Sand, wet, no odor		
8	S-3 8'-12'	2.1'	8.0'	As above, wet, no odor	0.0	23
10					0.0	18
				Refusal @ 11.4' BGS		
12						
14						
16						
18						

LEVEL DATA			BOTTOM OF	BOTTOM OF	GROUNDWATER	NOTES:
DATE	TIME	ELAPSED TIME	CASING	BORING	ENCOUNTERED	
				11.4'	6.6'	

GENERAL NOTES
1) STRATIFICATION LINES REPRESENT APPROXIMATE BOUNDARY BETWEEN SOIL TYPES, TRANSITIONS MAY BE GRADUAL.
2) WATER LEVEL READINGS HAVE BEEN MADE AT TIMES AND UNDER CONDITIONS STATED, FLUCTUATIONS OF GROUNDWATER
3) Abbreviations
and = 35 to 50 % c = coarse
some = 20 to 35% m = medium BGS = Below the Ground Surface
little = 10 to 20% f = fine NA = Not Applicable
trace = 1 to 10% vf = very fine

BORING: SB-119

LABELLA Associates, P.C.

300 STATE STREET, ROCHESTER, NY
ENVIRONMENTAL ENGINEERING CONSULTANTS

PROJECT
690 Saint Paul Street
Rochester, New York
BCP Site #C828159

BORING: SB-120
SHEET 1 OF
JOB: 209280
CHKD BY: ED

CONTRACTOR: Nothnagle Drilling, Inc. BORING LOCATION: TIME: 1045 TO 1115
DRILLER: J. Swytzer GROUND SURFACE ELEVATION: DATUM:
LABELLA REPRESENTATIVE: E. Dumrese START DATE: 10/7/2010 END DATE: 10/7/2010

TYPE OF DRILL RIG: Track Mounted Geoprobe Model 6610DT DRIVE SAMPLER TYPE: 4-foot Macrocore
AUGER SIZE AND TYPE: NA INSIDE DIAMETER: ~1.8-Inch
OVERBURDEN SAMPLING METHOD: Direct Push OTHER:

DEPTH	SAMPLE NO. AND DEPTH	SAMPLE RECOVERY	STRATA CHANGE	UAL CLASSIFICATION	PID FIELD SCREEN (PPM)	LUDLUM FIELD SCREEN (µREM/H)
0	S-1 0' to 4'	1.4'	0.0'	Asphalt		52
				FILL MATERIALS		
			0.2'	Black, cinders, coals, slag, dry, no odor	0.0	
2					0.0	96
4	S-2 4'-8'	0.9'	4.0'	Brown, SILT, little mf Sand, moist, no odor	0.0	12
6					0.0	64
8	S-3 8'-12'	1.2'	8.0'	As above, wet, no odor	0.0	56
10					0.0	19
				Refusal @ 11.0' BGS		
12						
14						
16						
18						

LEVEL DATA			BOTTOM OF	BOTTOM OF	GROUNDWATER
DATE	TIME	ELAPSED TIME	CASING	BORING	ENCOUNTERED
				11.0'	8.0'

NOTES:

GENERAL NOTES
1) STRATIFICATION LINES REPRESENT APPROXIMATE BOUNDARY BETWEEN SOIL TYPES, TRANSITIONS MAY BE GRADUAL.
2) WATER LEVEL READINGS HAVE BEEN MADE AT TIMES AND UNDER CONDITIONS STATED, FLUCTUATIONS OF GROUNDWATER
3) Abbreviations
and = 35 to 50 % c = coarse
some = 20 to 35% m = medium BGS = Below the Ground Surface
little = 10 to 20% f = fine NA = Not Applicable
trace = 1 to 10% vf = very fine

BORING: SB-120

LABELLA Associates, P.C.

300 STATE STREET, ROCHESTER, NY
ENVIRONMENTAL ENGINEERING CONSULTANTS

PROJECT
690 Saint Paul Street
Rochester, New York
BCP Site #C828159

BORING: SB-122
SHEET 1 OF
JOB: 209280
CHKD BY: ED

CONTRACTOR: Nothnagle Drilling, Inc. BORING LOCATION: TIME: 1130 TO 1200
DRILLER: J. Swytzer GROUND SURFACE ELEVATION: DATUM:
LABELLA REPRESENTATIVE: E. Dumrese START DATE: 10/7/2010 END DATE: 10/7/2010

TYPE OF DRILL RIG: Track Mounted Geoprobe Model 6610DT DRIVE SAMPLER TYPE: 4-foot Macrocore
AUGER SIZE AND TYPE: NA INSIDE DIAMETER: ~1.8-Inch
OVERBURDEN SAMPLING METHOD: Direct Push OTHER:

DEPTH	SAMPLE NO. AND DEPTH	SAMPLE RECOVERY	STRATA CHANGE	VISUAL CLASSIFICATION	PID FIELD SCREEN (PPM)	LUDLUM FIELD SCREEN (µREM/H)
0	S-1 0' to 4'	3.1'	0.0'	Asphalt		15
			0.3'	Brown, SILT, and mf SAND, moist, no odor	0.0	
2					0.0	32
4	S-2 4'-8'	2.0'	4.0'	As above ,moist, no odor	0.0	46
6					0.0	48
			7.6'	As above, wet, no odor		
8	S-3 8'-12'	1.8'	8.0'	As above, wet, no odor	0.0	45
10					0.0	85
				Refusal @ 11.0' BGS		
12						
14						
16						
18						

LEVEL DATA			BOTTOM OF	BOTTOM OF	GROUNDWATER	NOTES:
DATE	TIME	ELAPSED TIME	CASING	BORING	ENCOUNTERED	
				11.0'	7.6'	

GENERAL NOTES
1) STRATIFICATION LINES REPRESENT APPROXIMATE BOUNDARY BETWEEN SOIL TYPES, TRANSITIONS MAY BE GRADUAL.
2) WATER LEVEL READINGS HAVE BEEN MADE AT TIMES AND UNDER CONDITIONS STATED, FLUCTUATIONS OF GROUNDWATER
3) Abbreviations

and = 35 to 50 %	c = coarse	
some = 20 to 35%	m = medium	BGS = Below the Ground Surface
little = 10 to 20%	f = fine	NA = Not Applicable
trace = 1 to 10%	vf = very fine	

BORING: SB-122

LABELLA Associates, P.C.

300 STATE STREET, ROCHESTER, NY
ENVIRONMENTAL ENGINEERING CONSULTANTS

PROJECT
690 Saint Paul Street
Rochester, New York
BCP Site #C828159

BORING: SB-123
SHEET 1 OF
JOB: 209280
CHKD BY: ED

CONTRACTOR: Nothnagle Drilling, Inc. BORING LOCATION: TIME: TO
DRILLER: J. Swytzer GROUND SURFACE ELEVATION: DATUM:
LABELLA REPRESENTATIVE: E. Dumrese START DATE: 10/7/2010 END DATE: 10/7/2010

TYPE OF DRILL RIG: Track Mounted Geoprobe Model 6610DT
AUGER SIZE AND TYPE: NA
OVERBURDEN SAMPLING METHOD: Direct Push
DRIVE SAMPLER TYPE: 4-foot Macrocore
INSIDE DIAMETER: ~1.8-Inch
OTHER:

DEPTH	SAMPLE NO. AND DEPTH	SAMPLE RECOVERY	STRATA CHANGE	UAL CLASSIFICATION	PID FIELD SCREEN (PPM)	LUDLUM FIELD SCREEN (µREM/H)
0	S-1 0' to 4'	1.4'	0.0'	Asphalt		13
			0.3'	Ligth brown, mc SAND, some Gravel, dry, no odor	0.0	
2					0.0	85
			3.5'	Brown, SILT, little mf Sand, moist, no odor		
4	S-2 4'-8'	0.9'	4.0'	As above ,moist, no odor	0.0	37
6					0.0	76
			7.1'	As above, saturated, no odor		
8	S-3 8'-12'	2.2'	8.0'	As above, saturated, no odor	0.0	85
10					0.0	51
				Refusal @ 11.7' BGS		
12						
14						
16						
18						

LEVEL DATA			BOTTOM OF	BOTTOM OF	GROUNDWATER
DATE	TIME	ELAPSED TIME	CASING	BORING	ENCOUNTERED
				11.7'	7.1'

NOTES:

GENERAL NOTES
1) STRATIFICATION LINES REPRESENT APPROXIMATE BOUNDARY BETWEEN SOIL TYPES, TRANSITIONS MAY BE GRADUAL.
2) WATER LEVEL READINGS HAVE BEEN MADE AT TIMES AND UNDER CONDITIONS STATED, FLUCTUATIONS OF GROUNDWATER
3) Abbreviations

and = 35 to 50 %	c = coarse	
some = 20 to 35%	m = medium	BGS = Below the Ground Surface
little = 10 to 20%	f = fine	NA = Not Applicable
trace = 1 to 10%	vf = very fine	

BORING: SB-123

LABELLA Associates, P.C.

300 STATE STREET, ROCHESTER, NY
ENVIRONMENTAL ENGINEERING CONSULTANTS

PROJECT
690 Saint Paul Street
Rochester, New York
BCP Site #C828159

BORING: SB-125
SHEET 1 OF
JOB: 209280
CHKD BY: ED

CONTRACTOR: Nothnagle Drilling, Inc. BORING LOCATION: TIME: TO
DRILLER: J. Swytzer GROUND SURFACE ELEVATION: DATUM:
LABELLA REPRESENTATIVE: E. Dumrese START DATE: 10/19/2010 END DATE: 10/19/2010

TYPE OF DRILL RIG: Track Mounted Geoprobe Model 6610DT
AUGER SIZE AND TYPE: NA
OVERBURDEN SAMPLING METHOD: Direct Push
DRIVE SAMPLER TYPE: 4-foot Macrocore
INSIDE DIAMETER: ~1.8-Inch
OTHER:

DEPTH	SAMPLE NO. AND DEPTH	SAMPLE RECOVERY	STRATA CHANGE	UAL CLASSIFICATION	PID FIELD SCREEN (PPM)	LUDLUM FIELD SCREEN (µREM/H)
0	S-1 0' to 4'	12.7'	0.0'	Asphalt		9
			0.3'	Light brown, SILT, some Gravel, moist, no odor	0.0	
2			2.0'	Light brown, SILT, little mf Sand, moist, no odor	0.0	2
4	S-2 4'-8'	2.9'	4.0'	Light brown, SILT and mf SAND, moist, no odor	0.0	3
6			6.0'	Light brown, SILT and mf SAND, wet, no odor	0.0	5
			7.0'	Pink sandstone		
			7.2'	Light brown, SILT, little mf Sand, moist, no odor		
8	S-3 8'-12'	2.4'	8.0'	Light brown, SILT, little mf Sand, moist, no odor	2.2	4
					9.4	
10			10.0'	As above, moist, no odor	20.9	3
			10.4'	As above, wet, no odor		
			10.9'	Weathered bedrock	3.2	
				Refusal @ 11.8' BGS		
12						
14						
16						
18						

LEVEL DATA			BOTTOM OF	BOTTOM OF	GROUNDWATER
DATE	TIME	ELAPSED TIME	CASING	BORING	ENCOUNTERED
				11.8'	6.0'

NOTES:

GENERAL NOTES
1) STRATIFICATION LINES REPRESENT APPROXIMATE BOUNDARY BETWEEN SOIL TYPES, TRANSITIONS MAY BE GRADUAL.
2) WATER LEVEL READINGS HAVE BEEN MADE AT TIMES AND UNDER CONDITIONS STATED, FLUCTUATIONS OF GROUNDWATER
3) Abbreviations
and = 35 to 50 %
some = 20 to 35%
little = 10 to 20%
trace = 1 to 10%
c = coarse
m = medium
f = fine
vf = very fine
BGS = Below the Ground Surface
NA = Not Applicable

BORING: SB-125

LABELLA Associates, P.C.

300 STATE STREET, ROCHESTER, NY
ENVIRONMENTAL ENGINEERING CONSULTANTS

PROJECT
690 Saint Paul Street
Rochester, New York
BCP Site #C828159

BORING: **SB-A1**
SHEET 1 OF
JOB: **209280**
CHKD BY: ED

CONTRACTOR: Nothnagle Drilling, Inc. BORING LOCATION: TIME: TO
DRILLER: J. Swytzer GROUND SURFACE ELEVATION: DATUM:
LABELLA REPRESENTATIVE: E. Dumrese START DATE: 3/24/2010 END DATE: 3/24/10

TYPE OF DRILL RIG: Track Mounted Geoprobe Model 6610DT
AUGER SIZE AND TYPE: NA
OVERBURDEN SAMPLING METHOD: Direct Push
DRIVE SAMPLER TYPE: 4-foot Macrocore
INSIDE DIAMETER: ~1.8-Inch
OTHER:

DEPTH	SAMPLE NO AND DEPTH	SAMPLE RECOVERY	STRATA CHANGE	VISUAL CLASSIFICATION	PID FIELD SCREEN (PPM)	LUDLUM FIELD SCREEN (µREM/H)
0	S-1 0' to 4'	2.3'	0.0'	Grass/Topsoil		
			0.6'	Crushed Stone (<1"), some mc Sand, moist, no odor	0.0	22
2					0.0	
4	S-2 4' - 8'	2.4'	4.0'	Light brown, mc SAND, little Silt and Gravel, moist, no odor	2.3	18
6					0.8	17
			7.7'	Light brown to gray, mf SAND, some c Gravel, moist, slightly weathered petroleum odor		
8	S-3 8' - 12'	1.5'	8.0'	As above, wet @ ~8.0' BGS, slightly weathered petroleum odor	1.9	
				Refusal @ ~ 9.1' BGS		
10						
12	S-4 12' - 16'					
14						
16	S-5 16' - 20'					
18						

WATER LEVEL DATA			BOTTOM OF	BOTTOM OF	GROUNDWATER
DATE	TIME	ELAPSED TIME	CASING	BORING	ENCOUNTERED
				9.1'	8.0'

NOTES:

GENERAL NOTES
1) STRATIFICATION LINES REPRESENT APPROXIMATE BOUNDARY BETWEEN SOIL TYPES, TRANSITIONS MAY BE GRADUAL.
2) WATER LEVEL READINGS HAVE BEEN MADE AT TIMES AND UNDER CONDITIONS STATED, FLUCTUATIONS OF GROUNDWATER
3) Abbreviations
and = 35 to 50 %
some = 20 to 35%
little = 10 to 20%
trace = 1 to 10%
c = coarse
m = medium
f = fine
vf = very fine
BGS = Below the Ground Surface
NA = Not Applicable

BORING: **SB-A1**

LABELLA Associates, P.C.

300 STATE STREET, ROCHESTER, NY
ENVIRONMENTAL ENGINEERING CONSULTANTS

PROJECT
690 Saint Paul Street
Rochester, New York
BCP Site #C828159

BORING: **SB-A2**
SHEET 1 OF
JOB: **209280**
CHKD BY: ED

CONTRACTOR: Nothnagle Drilling, Inc. BORING LOCATION: TIME: TO
DRILLER: J. Swytzer GROUND SURFACE ELEVATION: DATUM:
LABELLA REPRESENTATIVE: E. Dumrese START DATE: 3/24/2010 END DATE: 3/24/10

TYPE OF DRILL RIG: Track Mounted Geoprobe Model 6610DT
AUGER SIZE AND TYPE: NA
OVERBURDEN SAMPLING METHOD: Direct Push
DRIVE SAMPLER TYPE: 4-foot Macrocore
INSIDE DIAMETER: ~1.8-Inch
OTHER:

DEPTH	SAMPLE NO AND DEPTH	SAMPLE RECOVERY	STRATA CHANGE	VISUAL CLASSIFICATION	PID FIELD SCREEN (PPM)	LUDLUM FIELD SCREEN (µREM/H)
0	S-1 0' to 4'	2.0'	0.0'	Concrete		
			0.5'	Light brown, mc SAND, some Silt, little Gravel, moist, no odor	0.0	17
2					0.0	
4	S-2 4' - 8'	3.2'	4.0'	Brown, mc SAND, little Silt and Gravel, moist, no odor	0.2	20
6					0.8	20
8	S-3 8' - 12'	1.8'	8.0'	As above, wet @ ~8.0' BGS, no odor	0.2	
				Refusal @ ~ 8.9' BGS		
10						
12	S-4 12' - 16'					
14						
16	S-5 16' - 20'					
18						

WATER LEVEL DATA			BOTTOM OF	BOTTOM OF	GROUNDWATER
DATE	TIME	ELAPSED TIME	CASING	BORING	ENCOUNTERED
				8.9'	8.0'

NOTES:

GENERAL NOTES
1) STRATIFICATION LINES REPRESENT APPROXIMATE BOUNDARY BETWEEN SOIL TYPES, TRANSITIONS MAY BE GRADUAL.
2) WATER LEVEL READINGS HAVE BEEN MADE AT TIMES AND UNDER CONDITIONS STATED, FLUCTUATIONS OF GROUNDWATER
3) Abbreviations
and = 35 to 50 %
some = 20 to 35%
little = 10 to 20%
trace = 1 to 10%
c = coarse
m = medium
f = fine
vf = very fine
BGS = Below the Ground Surface
NA = Not Applicable

BORING: **SB-A2**

LABELLA Associates, P.C.

300 STATE STREET, ROCHESTER, NY
ENVIRONMENTAL ENGINEERING CONSULTANTS

PROJECT
690 Saint Paul Street
Rochester, New York
BCP Site #C828159

BORING: **SB-A4**
SHEET 1 OF
JOB: **209280**
CHKD BY: ED

CONTRACTOR: Nothnagle Drilling, Inc. BORING LOCATION: TIME: TO
DRILLER: J. Swytzer GROUND SURFACE ELEVATION: DATUM:
LABELLA REPRESENTATIVE: E. Dumrese START DATE: 3/24/2010 END DATE: 3/24/10

TYPE OF DRILL RIG: Track Mounted Geoprobe Model 6610DT
AUGER SIZE AND TYPE: NA
OVERBURDEN SAMPLING METHOD: Direct Push
DRIVE SAMPLER TYPE: 4-foot Macrocore
INSIDE DIAMETER: ~1.8-Inch
OTHER:

DEPTH	SAMPLE NO AND DEPTH	SAMPLE RECOVERY	STRATA CHANGE	VISUAL CLASSIFICATION	PID FIELD SCREEN (PPM)	LUDLUM FIELD SCREEN (µREM/H)
0	S-1 0' to 4'	1.6'	0.0'	Grass/Topsoil		
			0.3'	Brown, m SAND, little Gravel and Silt, moist, no odor	0.0	25
2			2.5'	Possible Sandstone Rock	0.0	
				Refusal @ ~2.5' BGS		
4	S-2 4' - 8'					
6						
8	S-3 8' - 12'					
10						
12	S-4 12' - 16'					
14						
16	S-5 16' - 20'					
18						

WATER LEVEL DATA			BOTTOM OF CASING	BOTTOM OF BORING	GROUNDWATER ENCOUNTERED
DATE	TIME	ELAPSED TIME			
				2.5'	No

NOTES:

GENERAL NOTES
1) STRATIFICATION LINES REPRESENT APPROXIMATE BOUNDARY BETWEEN SOIL TYPES, TRANSITIONS MAY BE GRADUAL.
2) WATER LEVEL READINGS HAVE BEEN MADE AT TIMES AND UNDER CONDITIONS STATED, FLUCTUATIONS OF GROUNDWATER
3) Abbreviations
and = 35 to 50 %
some = 20 to 35%
little = 10 to 20%
trace = 1 to 10%
c = coarse
m = medium
f = fine
vf = very fine
BGS = Below the Ground Surface
NA = Not Applicable

BORING: **SB-A4**

LABELLA Associates, P.C.

300 STATE STREET, ROCHESTER, NY
ENVIRONMENTAL ENGINEERING CONSULTANTS

PROJECT
690 Saint Paul Street
Rochester, New York
BCP Site #C828159

BORING: **SB-A4(A)**
SHEET 1 OF
JOB: **209280**
CHKD BY: ED

CONTRACTOR: Nothnagle Drilling, Inc. BORING LOCATION: TIME: TO
DRILLER: J. Swytzer GROUND SURFACE ELEVATION: DATUM:
LABELLA REPRESENTATIVE: E. Dumrese START DATE: 3/25/2010 END DATE: 3/25/10

TYPE OF DRILL RIG: Track Mounted Geoprobe Model 6610DT
AUGER SIZE AND TYPE: NA
OVERBURDEN SAMPLING METHOD: Direct Push
DRIVE SAMPLER TYPE: 4-foot Macrocore
INSIDE DIAMETER: ~1.8-Inch
OTHER:

DEPTH	SAMPLE NO AND DEPTH	SAMPLE RECOVERY	STRATA CHANGE	VISUAL CLASSIFICATION	PID FIELD SCREEN (PPM)	LUDLUM FIELD SCREEN (µREM/H)
0	S-1 0' to 4'	2.3'	0.0'	Grass/Topsoil		
			1.0'	Brown, SILT, little mf Sand, moist, no odor	0.0	14
2					0.1	
			3.2'	Borwn, mf SAND, trace Silt, moist, no odor		
4	S-2 4' - 8'	2.5'	4.0'	As above, wet @~4.0' BGS, no odor	0.2	16
			5.8'	Light brown, SILT, some mc Sand, wet, no odor		
6					0.4	
				Refusal @ ~ 7.0' BGS		
8	S-3 8' - 12'					
10						
12	S-4 12' - 16'					
14						
16	S-5 16' - 20'					
18						

WATER LEVEL DATA			BOTTOM OF CASING	BOTTOM OF BORING	GROUNDWATER ENCOUNTERED
DATE	TIME	ELAPSED TIME			
				7.0'	4.0'

NOTES:

GENERAL NOTES
1) STRATIFICATION LINES REPRESENT APPROXIMATE BOUNDARY BETWEEN SOIL TYPES, TRANSITIONS MAY BE GRADUAL.
2) WATER LEVEL READINGS HAVE BEEN MADE AT TIMES AND UNDER CONDITIONS STATED, FLUCTUATIONS OF GROUNDWATER
3) Abbreviations
and = 35 to 50 %
some = 20 to 35%
little = 10 to 20%
trace = 1 to 10%
c = coarse
m = medium
f = fine
vf = very fine
BGS = Below the Ground Surface
NA = Not Applicable

BORING: **SB-A4(A)**

LABELLA Associates, P.C.

300 STATE STREET, ROCHESTER, NY
ENVIRONMENTAL ENGINEERING CONSULTANTS

PROJECT
690 Saint Paul Street
Rochester, New York
BCP Site #C828159

BORING: **SB-A5**
SHEET 1 OF
JOB: **209280**
CHKD BY: ED

CONTRACTOR: Nothnagle Drilling, Inc. BORING LOCATION: TIME: TO
DRILLER: J. Swytzer GROUND SURFACE ELEVATION: DATUM:
LABELLA REPRESENTATIVE: E. Dumrese START DATE: 3/25/2010 END DATE: 3/25/10

TYPE OF DRILL RIG: Track Mounted Geoprobe Model 6610DT
AUGER SIZE AND TYPE: NA
OVERBURDEN SAMPLING METHOD: Direct Push
DRIVE SAMPLER TYPE: 4-foot Macrocore
INSIDE DIAMETER: ~1.8-Inch
OTHER:

DEPTH	SAMPLE NO AND DEPTH	SAMPLE RECOVERY	STRATA CHANGE	VISUAL CLASSIFICATION	PID FIELD SCREEN (PPM)	LUDLUM FIELD SCREEN (µREM/H)
0	S-1 0' to 4'	1.6'	0.0'	Concrete		
			0.5'	Brown, mc SAND, little Silt and Gravel, moist, no odor	0.0	18
2			2.5'	Brown, SILT, trace f Sand and Gravel, moist, no odor	0.1	
				Refusal @ ~3.5' BGS		
4	S-2 4' - 8'					
6						
8	S-3 8' - 12'					
10						
12	S-4 12' - 16'					
14						
16	S-5 16' - 20'					
18						

WATER LEVEL DATA			BOTTOM OF CASING	BOTTOM OF BORING	GROUNDWATER ENCOUNTERED
DATE	TIME	ELAPSED TIME			
				3.5'	No

NOTES:

GENERAL NOTES
1) STRATIFICATION LINES REPRESENT APPROXIMATE BOUNDARY BETWEEN SOIL TYPES, TRANSITIONS MAY BE GRADUAL.
2) WATER LEVEL READINGS HAVE BEEN MADE AT TIMES AND UNDER CONDITIONS STATED, FLUCTUATIONS OF GROUNDWATER
3) Abbreviations
and = 35 to 50 %
some = 20 to 35%
little = 10 to 20%
trace = 1 to 10%
c = coarse
m = medium
f = fine
vf = very fine
BGS = Below the Ground Surface
NA = Not Applicable

BORING: **SB-A5**

LABELLA Associates, P.C.

300 STATE STREET, ROCHESTER, NY
ENVIRONMENTAL ENGINEERING CONSULTANTS

PROJECT
690 Saint Paul Street
Rochester, New York
BCP Site #C828159

BORING: SB-A6
SHEET 1 OF
JOB: 209280
CHKD BY: ED

CONTRACTOR: Nothnagle Drilling, Inc. BORING LOCATION: TIME: TO
DRILLER: J. Swytzer GROUND SURFACE ELEVATION: DATUM:
LABELLA REPRESENTATIVE: E. Dumrese START DATE: 3/25/2010 END DATE: 3/25/10

TYPE OF DRILL RIG: Track Mounted Geoprobe Model 6610DT
AUGER SIZE AND TYPE: NA
OVERBURDEN SAMPLING METHOD: Direct Push
DRIVE SAMPLER TYPE: 4-foot Macrocore
INSIDE DIAMETER: ~1.8-Inch
OTHER:

DEPTH	SAMPLE NO. AND DEPTH	SAMPLE RECOVERY	STRATA CHANGE	VISUAL CLASSIFICATION	PID FIELD SCREEN (PPM)	LUDLUM FIELD SCREEN (µREM/H)
0	S-1 0' to 4'	1.6'	0.0'	Concrete		
			0.5'	Light brown, SILT and mf SAND, moist, no odor	0.0	14
2					1.3	
			2.8'	Weathered Rock		
				Refusal @ ~ 3.2' BGS		
4	S-2 4' - 8'					
6						
8	S-3 8' - 12'					
10						
12	S-4 12' - 16'					
14						
16	S-5 16' - 20'					
18						

WATER LEVEL DATA			BOTTOM OF CASING	BOTTOM OF BORING	GROUNDWATER ENCOUNTERED
DATE	TIME	ELAPSED TIME			
				3.2'	No

NOTES:

GENERAL NOTES
1) STRATIFICATION LINES REPRESENT APPROXIMATE BOUNDARY BETWEEN SOIL TYPES, TRANSITIONS MAY BE GRADUAL.
2) WATER LEVEL READINGS HAVE BEEN MADE AT TIMES AND UNDER CONDITIONS STATED, FLUCTUATIONS OF GROUNDWATER
3) Abbreviations
and = 35 to 50 %
some = 20 to 35%
little = 10 to 20%
trace = 1 to 10%
c = coarse
m = medium
f = fine
vf = very fine
BGS = Below the Ground Surface
NA = Not Applicable

BORING: SB-A6

LABELLA Associates, P.C.

300 STATE STREET, ROCHESTER, NY
ENVIRONMENTAL ENGINEERING CONSULTANTS

PROJECT
690 Saint Paul Street
Rochester, New York
BCP Site #C828159

BORING: **SB-A7**
SHEET 1 OF
JOB: **209280**
CHKD BY: ED

CONTRACTOR: Nothnagle Drilling, Inc. BORING LOCATION: TIME: TO
DRILLER: J. Swytzer GROUND SURFACE ELEVATION: DATUM:
LABELLA REPRESENTATIVE: E. Dumrese START DATE: 3/25/2010 END DATE: 3/25/10

TYPE OF DRILL RIG: Track Mounted Geoprobe Model 6610DT
AUGER SIZE AND TYPE: NA
OVERBURDEN SAMPLING METHOD: Direct Push
DRIVE SAMPLER TYPE: 4-foot Macrocore
INSIDE DIAMETER: ~1.8-Inch
OTHER:

DEPTH	SAMPLE NO AND DEPTH	SAMPLE RECOVERY	STRATA CHANGE	VISUAL CLASSIFICATION	PID FIELD SCREEN (PPM)	LUDLUM FIELD SCREEN (µREM/H)
0	S-1 0' to 4'	1.6'	0.0'	Concrete		
			0.5'	Light brown, SILT and mf SAND, moist, no odor	0.8	11
2					0.0	
				Refusal @ ~ 3.5' BGS		
4	S-2 4' - 8'					
6						
8	S-3 8' - 12'					
10						
12	S-4 12' - 16'					
14						
16	S-5 16' - 20'					
18						

WATER LEVEL DATA			BOTTOM OF CASING	BOTTOM OF BORING	GROUNDWATER ENCOUNTERED
DATE	TIME	ELAPSED TIME			
				3.5'	No

NOTES:

GENERAL NOTES
1) STRATIFICATION LINES REPRESENT APPROXIMATE BOUNDARY BETWEEN SOIL TYPES, TRANSITIONS MAY BE GRADUAL.
2) WATER LEVEL READINGS HAVE BEEN MADE AT TIMES AND UNDER CONDITIONS STATED, FLUCTUATIONS OF GROUNDWATER
3) Abbreviations
and = 35 to 50 %
some = 20 to 35%
little = 10 to 20%
trace = 1 to 10%
c = coarse
m = medium
f = fine
vf = very fine
BGS = Below the Ground Surface
NA = Not Applicable

BORING: **SB-A7**

LABELLA Associates, P.C.

300 STATE STREET, ROCHESTER, NY
ENVIRONMENTAL ENGINEERING CONSULTANTS

PROJECT
690 Saint Paul Street
Rochester, New York
BCP Site #C828159

BORING: **SB-A8**
SHEET 1 OF
JOB: **209280**
CHKD BY: ED

CONTRACTOR: Nothnagle Drilling, Inc. BORING LOCATION: TIME: TO
DRILLER: J. Swytzer GROUND SURFACE ELEVATION: DATUM:
LABELLA REPRESENTATIVE: E. Dumrese START DATE: 3/24/2010 END DATE: 3/24/10

TYPE OF DRILL RIG: Track Mounted Geoprobe Model 6610DT
AUGER SIZE AND TYPE: NA
OVERBURDEN SAMPLING METHOD: Direct Push
DRIVE SAMPLER TYPE: 4-foot Macrocore
INSIDE DIAMETER: ~1.8-Inch
OTHER:

DEPTH	SAMPLE NO AND DEPTH	SAMPLE RECOVERY	STRATA CHANGE	VISUAL CLASSIFICATION	PID FIELD SCREEN (PPM)	LUDLUM FIELD SCREEN (µREM/H)
0	S-1 0' to 4'	1.7'	0.0'	Topsoi/Grass		
			0.8'	Brown, mc SAND, some Silt and c Gravel, moist, no odor	0.4	13
2					0.0	
			3.8'	Buried Topsoil		
4	S-2 4' - 8'	2.0'	4.0'	As above, wet @ ~6.2' BGS, no odor	0.3	13
6					0.0	
8	S-3 8' - 12'			*Refusal @ 8.0' BGS*		
10						
12	S-4 12' - 16'					
14						
16	S-5 16' - 20'					
18						

WATER LEVEL DATA			BOTTOM OF	BOTTOM OF	GROUNDWATER
DATE	TIME	ELAPSED TIME	CASING	BORING	ENCOUNTERED
				8.0'	6.2'

NOTES:

GENERAL NOTES
1) STRATIFICATION LINES REPRESENT APPROXIMATE BOUNDARY BETWEEN SOIL TYPES, TRANSITIONS MAY BE GRADUAL.
2) WATER LEVEL READINGS HAVE BEEN MADE AT TIMES AND UNDER CONDITIONS STATED, FLUCTUATIONS OF GROUNDWATER
3) Abbreviations
and = 35 to 50 %
some = 20 to 35%
little = 10 to 20%
trace = 1 to 10%
c = coarse
m = medium
f = fine
vf = very fine
BGS = Below the Ground Surface
NA = Not Applicable

BORING: **SB-A8**

LABELLA Associates, P.C.

300 STATE STREET, ROCHESTER, NY
ENVIRONMENTAL ENGINEERING CONSULTANTS

PROJECT
690 Saint Paul Street
Rochester, New York
BCP Site #C828159

BORING: **SB-A**
SHEET 1 OF
JOB: **209280**
CHKD BY: ED

CONTRACTOR: Nothnagle Drilling, Inc. BORING LOCATION: TIME: TO
DRILLER: J. Swytzer GROUND SURFACE ELEVATION: DATUM:
LABELLA REPRESENTATIVE: E. Dumrese START DATE: 3/25/2010 END DATE: 3/25/10

TYPE OF DRILL RIG: Track Mounted Geoprobe Model 6610DT
AUGER SIZE AND TYPE: NA
OVERBURDEN SAMPLING METHOD: Direct Push
DRIVE SAMPLER TYPE: 4-foot Macrocore
INSIDE DIAMETER: ~1.8-Inch
OTHER:

DEPTH	SAMPLE NO AND DEPTH	SAMPLE RECOVERY	STRATA CHANGE	VISUAL CLASSIFICATION	PID FIELD SCREEN (PPM)	LUDLUM FIELD SCREEN (µREM/H)
0	S-1 0' to 4'	3.0'	0.0'	Topsoi/Grass		
				FILL MATERIALS		
			0.3'	Fill materials - Cinders and Coals, moist, no odor	0.2	24
2					0.0	
			3.2'	Brown, mc SAND, little Silt and Gravel, moist, no odor		
4	S-2 4' - 8'	2.1'	4.0'	As above, wet @ ~4.0' BGS	22.4	18
			5.0'	Gray to black, SILT, some mf Sand, wet, petroleum odor		
6				*Refusal @ ~ 5.9' BGS*		
8	S-3 8' - 12'					
10						
12	S-4 12' - 16'					
14						
16	S-5 16' - 20'					
18						

WATER LEVEL DATA			BOTTOM OF CASING	BOTTOM OF BORING	GROUNDWATER ENCOUNTERED
DATE	TIME	ELAPSED TIME			
				5.9'	4.0'

NOTES:

GENERAL NOTES
1) STRATIFICATION LINES REPRESENT APPROXIMATE BOUNDARY BETWEEN SOIL TYPES, TRANSITIONS MAY BE GRADUAL.
2) WATER LEVEL READINGS HAVE BEEN MADE AT TIMES AND UNDER CONDITIONS STATED, FLUCTUATIONS OF GROUNDWATER
3) Abbreviations
and = 35 to 50 %
some = 20 to 35%
little = 10 to 20%
trace = 1 to 10%
c = coarse
m = medium
f = fine
vf = very fine
BGS = Below the Ground Surface
NA = Not Applicable

BORING: **SB-A**

LABELLA Associates, P.C.

300 STATE STREET, ROCHESTER, NY
ENVIRONMENTAL ENGINEERING CONSULTANTS

PROJECT
690 Saint Paul Street
Rochester, New York
BCP Site #C828159

BORING: MW-5
SHEET 1 OF
JOB: 209280
CHKD BY: ED

CONTRACTOR: Nothnagle Drilling, Inc. BORING LOCATION: TIME: 830 TO 930
DRILLER: J. Swytzer GROUND SURFACE ELEVATION: DATUM:
LABELLA REPRESENTATIVE: E. Dumrese START DATE: 6/22/2010 END DATE: 6/22/10

TYPE OF DRILL RIG: Track Mounted Geoprobe Model 6610DT DRIVE SAMPLER TYPE: 4-foot Macrocore
AUGER SIZE AND TYPE: NA INSIDE DIAMETER: ~1.8-Inch
OVERBURDEN SAMPLING METHOD: Direct Push OTHER:

DEPTH	SAMPLE NO. AND DEPTH	SAMPLE RECOVERY	STRATA CHANGE	VISUAL CLASSIFICATION	PID FIELD SCREEN (PPM)	LUDLUM FIELD SCREEN (µREM/H)
0	S-1 0' to 4'	2.7'	0.0'	Asphalt		5
				FILL MATERIALS		
			0.3'	Black, cinders, coals, crushed brick, mc Sand, moist, no odor	0.0	
2					0.0	8
4	S-2 4' - 8'	3.5'	4.0'	As above, moist, no odor	0.0	11
				NATIVE SOIL		
			4.7'	Light brown, SILT, little mf Sand, trace Gravel, moist, no odor		
			5.9'	Brown, SILT, moist, no odor		
6					0.0	18
			7.2'	Light brown, mc SAND, wet, no odor		
8	S-3 8' - 12'	4.0'	8.0'	As above, wet, no odor	0.0	11
10					0.0	18
			10.5'	Grey, weathered rock, dry, no odor		
				Refusal @ 11.7' BGS		
12	S-4 12' - 16'					
14						
16	S-5 16' - 20'					
18						

WATER LEVEL DATA			BOTTOM OF CASING	BOTTOM OF BORING	GROUNDWATER ENCOUNTERED
DATE	TIME	ELAPSED TIME			
				11.7'	7.2'

NOTES:
Well set with 5.0' of screen from 6.7' to 11.7' BGS
Sand filter pack from 5.0' to 11.7' BGS, Bentonite to surface

GENERAL NOTES
1) STRATIFICATION LINES REPRESENT APPROXIMATE BOUNDARY BETWEEN SOIL TYPES, TRANSITIONS MAY BE GRADUAL.
2) WATER LEVEL READINGS HAVE BEEN MADE AT TIMES AND UNDER CONDITIONS STATED, FLUCTUATIONS OF GROUNDWATER
3) Abbreviations

and = 35 to 50 %	c = coarse	
some = 20 to 35%	m = medium	BGS = Below the Ground Surface
little = 10 to 20%	f = fine	NA = Not Applicable
trace = 1 to 10%	vf = very fine	

BORING: MW-5

LABELLA Associates, P.C.

300 STATE STREET, ROCHESTER, NY
ENVIRONMENTAL ENGINEERING CONSULTANTS

PROJECT
690 Saint Paul Street
Rochester, New York
BCP Site #C828159

BORING: **MW-6**
SHEET 1 OF
JOB: **209280**
CHKD BY: ED

CONTRACTOR: Nothnagle Drilling, Inc. BORING LOCATION: TIME: 915 TO 950
DRILLER: J. Swytzer GROUND SURFACE ELEVATION: DATUM:
LABELLA REPRESENTATIVE: E. Dumrese START DATE: 6/22/2010 END DATE: 6/22/10

TYPE OF DRILL RIG: Track Mounted Geoprobe Model 6610DT
AUGER SIZE AND TYPE: NA
OVERBURDEN SAMPLING METHOD: Direct Push
DRIVE SAMPLER TYPE: 4-foot Macrocore
INSIDE DIAMETER: ~1.8-Inch
OTHER:

DEPTH	SAMPLE NO AND DEPTH	SAMPLE RECOVERY	STRATA CHANGE	VISUAL CLASSIFICATION	PID FIELD SCREEN (PPM)	LUDLUM FIELD SCREEN (µREM/H)
0	S-1 0' to 4'	3.1'	0.0'	Asphalt		12
				FILL MATERIALS		
			0.3'	Black, cinders, coals, crushed brick, mc Sand, moist, no odor	0.0	
2					0.0	18
				NATIVE SOIL		
			3.3'	Light brown, CLAY, trace Silt, moist, no odor		
4	S-2 4' - 8'	4.0'	4.0'	Light brown, mc SAND and SILT, little mf Sand, moist, no odor	5.3	15
6					0.0	14
8	S-3 8' - 12'	2.6'	8.0'	As above, moist, no odor	0.0	12
			8.3'	As above, saturated, no odor		
10					0.0	8
				Refusal @ 10.3' BGS		
12	S-4 12' - 16'					
14						
16	S-5 16' - 20'					
18						

WATER LEVEL DATA			BOTTOM OF	BOTTOM OF	GROUNDWATER
DATE	TIME	ELAPSED TIME	CASING	BORING	ENCOUNTERED
				10.3'	8.3'

NOTES:
Well set with 5.0' of screen from 5.3' to 10.3' BGS
Sand filter pack from 3.0' to 10.3' BGS, Bentonite to surface

GENERAL NOTES
1) STRATIFICATION LINES REPRESENT APPROXIMATE BOUNDARY BETWEEN SOIL TYPES, TRANSITIONS MAY BE GRADUAL.
2) WATER LEVEL READINGS HAVE BEEN MADE AT TIMES AND UNDER CONDITIONS STATED, FLUCTUATIONS OF GROUNDWATER
3) Abbreviations
and = 35 to 50 %
some = 20 to 35%
little = 10 to 20%
trace = 1 to 10%
c = coarse
m = medium
f = fine
vf = very fine
BGS = Below the Ground Surface
NA = Not Applicable

BORING: **MW-6**

LABELLA Associates, P.C.

300 STATE STREET, ROCHESTER, NY
ENVIRONMENTAL ENGINEERING CONSULTANTS

PROJECT
690 Saint Paul Street
Rochester, New York
BCP Site #C828159

BORING: SG-1
SHEET 1 OF
JOB: 209280
CHKD BY: ED

CONTRACTOR: Nothnagle Drilling, Inc. BORING LOCATION: TIME: 1230 TO 1315
DRILLER: J. Swytzer GROUND SURFACE ELEVATION: DATUM:
LABELLA REPRESENTATIVE: E. Dumrese START DATE: 6/25/2010 END DATE: 6/25/10

TYPE OF DRILL RIG: Track Mounted Geoprobe Model 6610DT
AUGER SIZE AND TYPE: NA
OVERBURDEN SAMPLING METHOD: Direct Push
DRIVE SAMPLER TYPE: 4-foot Macrocore
INSIDE DIAMETER: ~1.8-Inch
OTHER:

DEPTH	SAMPLE NO AND DEPTH	SAMPLE RECOVERY	STRATA CHANGE	VISUAL CLASSIFICATION	PID FIELD SCREEN (PPM)	LUDLUM FIELD SCREEN (µREM/H)
0	S-1 0' to 4'	3.3'	0.0'	Asphalt		20
			0.6'	Crushed Gravel	0.0	
			0.9'	Light brown, SILT, some mf Sand, moist, no odor		
2					0.0	22
4	S-2 4' - 8'	4.0'	4.0'	As above, moist, no odor	5.3	15
6					0.0	12
8	S-3 8' - 12'	2.5'	8.0'	As above, moist, no odor	0.0	18
10				*Refusal @ 10.0' BGS*		
12	S-4 12' - 16'					
14						
16	S-5 16' - 20'					
18						

WATER LEVEL DATA			BOTTOM OF CASING	BOTTOM OF BORING	GROUNDWATER ENCOUNTERED
DATE	TIME	ELAPSED TIME			
				10.0'	No

NOTES:

GENERAL NOTES
1) STRATIFICATION LINES REPRESENT APPROXIMATE BOUNDARY BETWEEN SOIL TYPES, TRANSITIONS MAY BE GRADUAL.
2) WATER LEVEL READINGS HAVE BEEN MADE AT TIMES AND UNDER CONDITIONS STATED, FLUCTUATIONS OF GROUNDWATER
3) Abbreviations
and = 35 to 50 %
some = 20 to 35%
little = 10 to 20%
trace = 1 to 10%
c = coarse
m = medium
f = fine
vf = very fine
BGS = Below the Ground Surface
NA = Not Applicable

BORING: SG-1

LABELLA Associates, P.C.

300 STATE STREET, ROCHESTER, NY
ENVIRONMENTAL ENGINEERING CONSULTANTS

PROJECT
690 Saint Paul Street
Rochester, New York
BCP Site #C828159

BORING: SG-2
SHEET 1 OF
JOB: 209280
CHKD BY: ED

CONTRACTOR: Nothnagle Drilling, Inc. BORING LOCATION: TIME: 1050 TO 1145
DRILLER: J. Swytzer GROUND SURFACE ELEVATION: DATUM:
LABELLA REPRESENTATIVE: E. Dumrese START DATE: 6/24/2010 END DATE: 6/24/10

TYPE OF DRILL RIG: Track Mounted Geoprobe Model 6610DT DRIVE SAMPLER TYPE: 4-foot Macrocore
AUGER SIZE AND TYPE: NA INSIDE DIAMETER: ~1.8-Inch
OVERBURDEN SAMPLING METHOD: Direct Push OTHER:

DEPTH	SAMPLE NO. AND DEPTH	SAMPLE RECOVERY	STRATA CHANGE	VISUAL CLASSIFICATION	PID FIELD SCREEN (PPM)	LUDLUM FIELD SCREEN (µREM/H)
0	S-1 0' to 4'	1.8'	0.0'	Asphalt		12
			0.6'	Crushed Gravel	0.0	
			0.9'	Light brown, mf SAND, little Silt and crushed Gravel, moist, no odor		
2					0.0	17
4	S-2 4' - 8'	3.0'	4.0'	As above, moist, no odor	5.3	12
6			6.0'	As above, wet, no odor	0.0	12
				Refusal @ 7.4' BGS		
8	S-3 8' - 12'					
10						
12	S-4 12' - 16'					
14						
16	S-5 16' - 20'					
18						

WATER LEVEL DATA			BOTTOM OF CASING	BOTTOM OF BORING	GROUNDWATER ENCOUNTERED
DATE	TIME	ELAPSED TIME			
				7.4'	6.0'

NOTES:

GENERAL NOTES
1) STRATIFICATION LINES REPRESENT APPROXIMATE BOUNDARY BETWEEN SOIL TYPES, TRANSITIONS MAY BE GRADUAL.
2) WATER LEVEL READINGS HAVE BEEN MADE AT TIMES AND UNDER CONDITIONS STATED, FLUCTUATIONS OF GROUNDWATER
3) Abbreviations and = 35 to 50 % c = coarse
some = 20 to 35% m = medium BGS = Below the Ground Surface
little = 10 to 20% f = fine NA = Not Applicable
trace = 1 to 10% vf = very fine

BORING: SG-2

LABELLA Associates, P.C.

300 STATE STREET, ROCHESTER, NY
ENVIRONMENTAL ENGINEERING CONSULTANTS

PROJECT
690 Saint Paul Street
Rochester, New York
BCP Site #C828159

BORING: SG-3
SHEET 1 OF
JOB: 209280
CHKD BY: ED

CONTRACTOR: Nothnagle Drilling, Inc. BORING LOCATION: TIME: 950 TO 1030
DRILLER: J. Swytzer GROUND SURFACE ELEVATION: DATUM:
LABELLA REPRESENTATIVE: E. Dumrese START DATE: 6/24/2010 END DATE: 6/24/10

TYPE OF DRILL RIG: Track Mounted Geoprobe Model 6610DT
AUGER SIZE AND TYPE: NA
OVERBURDEN SAMPLING METHOD: Direct Push
DRIVE SAMPLER TYPE: 4-foot Macrocore
INSIDE DIAMETER: ~1.8-Inch
OTHER:

DEPTH	SAMPLE NO AND DEPTH	SAMPLE RECOVERY	STRATA CHANGE	VISUAL CLASSIFICATION	PID FIELD SCREEN (PPM)	LUDLUM FIELD SCREEN (µREM/H)
0	S-1 0' to 4'	1.3'	0.0'	Asphalt		20
				FILL MATERIALS		
			0.6'	Black , cinders, coals, moist, no odor	0.0	
2					0.0	7
				NATIVE SOIL		
			3.1'	Light brown, SILT, some mf Sand, moist, no odor		
4	S-2 4' - 8'	2.3'	4.0'	As above, moist, no odor	0.0	11
			5.5'	As above, wet, no odor		
6				*Refusal @ 6.0' BGS*	0.0	10
8	S-3 8' - 12'					
10						
12	S-4 12' - 16'					
14						
16	S-5 16' - 20'					
18						

WATER LEVEL DATA			BOTTOM OF	BOTTOM OF	GROUNDWATER
DATE	TIME	ELAPSED TIME	CASING	BORING	ENCOUNTERED
				6.0'	5.5'

NOTES:

GENERAL NOTES
1) STRATIFICATION LINES REPRESENT APPROXIMATE BOUNDARY BETWEEN SOIL TYPES, TRANSITIONS MAY BE GRADUAL.
2) WATER LEVEL READINGS HAVE BEEN MADE AT TIMES AND UNDER CONDITIONS STATED, FLUCTUATIONS OF GROUNDWATER
3) Abbreviations
and = 35 to 50 %
some = 20 to 35%
little = 10 to 20%
trace = 1 to 10%
c = coarse
m = medium
f = fine
vf = very fine
BGS = Below the Ground Surface
NA = Not Applicable

BORING: SG-3

LABELLA Associates, P.C.

300 STATE STREET, ROCHESTER, NY
ENVIRONMENTAL ENGINEERING CONSULTANTS

PROJECT
690 Saint Paul Street
Rochester, New York
BCP Site #C828159

BORING: SG-4
SHEET 1 OF
JOB: 209280
CHKD BY: ED

CONTRACTOR: Nothnagle Drilling, Inc. BORING LOCATION: TIME: 815 TO 920
DRILLER: J. Swytzer GROUND SURFACE ELEVATION: DATUM:
LABELLA REPRESENTATIVE: E. Dumrese START DATE: 6/25/2010 END DATE: 6/25/10

TYPE OF DRILL RIG: Track Mounted Geoprobe Model 6610DT
AUGER SIZE AND TYPE: NA
OVERBURDEN SAMPLING METHOD: Direct Push
DRIVE SAMPLER TYPE: 4-foot Macrocore
INSIDE DIAMETER: ~1.8-Inch
OTHER:

DEPTH	SAMPLE NO AND DEPTH	SAMPLE RECOVERY	STRATA CHANGE	VISUAL CLASSIFICATION	PID FIELD SCREEN (PPM)	LUDLUM FIELD SCREEN (µREM/H)
0	S-1 0' to 4'	1.8'	0.0'	Asphalt		9
			0.4'	Brown, mf SAND and SILT, moist, no odor	0.0	
2					0.0	11
4	S-2 4' - 8'	4.0'	4.0'	As above, moist, no odor	0.0	9
			5.9'	As above, wet, no odor		
6					0.0	8
8	S-3 8' - 12'			*Refusal @ 8.0' BGS*		
10						
12	S-4 12' - 16'					
14						
16	S-5 16' - 20'					
18						

WATER LEVEL DATA			BOTTOM OF CASING	BOTTOM OF BORING	GROUNDWATER ENCOUNTERED
DATE	TIME	ELAPSED TIME			
				8.0'	5.9'

NOTES:

GENERAL NOTES
1) STRATIFICATION LINES REPRESENT APPROXIMATE BOUNDARY BETWEEN SOIL TYPES, TRANSITIONS MAY BE GRADUAL.
2) WATER LEVEL READINGS HAVE BEEN MADE AT TIMES AND UNDER CONDITIONS STATED, FLUCTUATIONS OF GROUNDWATER
3) Abbreviations
and = 35 to 50 %
some = 20 to 35%
little = 10 to 20%
trace = 1 to 10%
c = coarse
m = medium
f = fine
vf = very fine
BGS = Below the Ground Surface
NA = Not Applicable

BORING: SG-4

LABELLA Associates, P.C.

300 STATE STREET, ROCHESTER, NY
ENVIRONMENTAL ENGINEERING CONSULTANTS

PROJECT
690 Saint Paul Street
Rochester, New York
BCP Site #C828159

BORING: SG-5
SHEET 1 OF
JOB: 209280
CHKD BY: ED

CONTRACTOR: Nothnagle Drilling, Inc. BORING LOCATION: TIME: 1345 TO 1400
DRILLER: J. Swytzer GROUND SURFACE ELEVATION: DATUM:
LABELLA REPRESENTATIVE: E. Dumrese START DATE: 6/22/2010 END DATE: 6/22/10

TYPE OF DRILL RIG: Track Mounted Geoprobe Model 6610DT
AUGER SIZE AND TYPE: NA
OVERBURDEN SAMPLING METHOD: Direct Push
DRIVE SAMPLER TYPE: 4-foot Macrocore
INSIDE DIAMETER: ~1.8-Inch
OTHER:

DEPTH	SAMPLE NO AND DEPTH	SAMPLE RECOVERY	STRATA CHANGE	VISUAL CLASSIFICATION	PID FIELD SCREEN (PPM)	LUDLUM FIELD SCREEN (µREM/H)
0	S-1 0' to 4'	3.4'	0.0'	Asphalt		12
				FILL MATERIALS		
			0.4'	Black, coals, cinders, crushed Gravel, moist, no odor	0.0	
2					0.0	21
			3.1'	Brown, mf SAND, little Silt, moist, no odor		
4	S-2 4' - 8'	4.0'	4.0'	As above, moist, no odor	0.0	7
				NATIVE SOIL		
			4.5'	Light brown, SILT, little mf Sand, trace Clay, moist, no odor		
6					0.0	12
8	S-3 8' - 12'	3.5'	8.0'	As above, moist, no odor	0.6	10
					271	
			9.3'	Grey to black, SILT, little mf Sand, trace Clay, strong odor, satruated		
10					308	11
					171	
12	S-4 12' - 16'			*Refusal @ 12.3' BGS*		
14						
16	S-5 16' - 20'					
18						

WATER LEVEL DATA			BOTTOM OF	BOTTOM OF	GROUNDWATER
DATE	TIME	ELAPSED TIME	CASING	BORING	ENCOUNTERED
				12.3'	9.3'

NOTES:

GENERAL NOTES
1) STRATIFICATION LINES REPRESENT APPROXIMATE BOUNDARY BETWEEN SOIL TYPES, TRANSITIONS MAY BE GRADUAL.
2) WATER LEVEL READINGS HAVE BEEN MADE AT TIMES AND UNDER CONDITIONS STATED, FLUCTUATIONS OF GROUNDWATER
3) Abbreviations
and = 35 to 50 %
some = 20 to 35%
little = 10 to 20%
trace = 1 to 10%
c = coarse
m = medium
f = fine
vf = very fine
BGS = Below the Ground Surface
NA = Not Applicable

BORING: SG-5

LABELLA Associates, P.C.

300 STATE STREET, ROCHESTER, NY
ENVIRONMENTAL ENGINEERING CONSULTANTS

PROJECT
690 Saint Paul Street
Rochester, New York
BCP Site #C828159

BORING: SG-6
SHEET 1 OF
JOB: 209280
CHKD BY: ED

CONTRACTOR: Nothnagle Drilling, Inc. BORING LOCATION: TIME: 1130 TO 1230
DRILLER: J. Swytzer GROUND SURFACE ELEVATION: DATUM:
LABELLA REPRESENTATIVE: E. Dumrese START DATE: 6/22/2010 END DATE: 6/22/10

TYPE OF DRILL RIG: Track Mounted Geoprobe Model 6610DT
AUGER SIZE AND TYPE: NA
OVERBURDEN SAMPLING METHOD: Direct Push
DRIVE SAMPLER TYPE: 4-foot Macrocore
INSIDE DIAMETER: ~1.8-Inch
OTHER:

DEPTH	SAMPLE NO AND DEPTH	SAMPLE RECOVERY	STRATA CHANGE	VISUAL CLASSIFICATION	PID FIELD SCREEN (PPM)	LUDLUM FIELD SCREEN (µREM/H)
0	S-1 0' to 4'	3.1'	0.0'	Asphalt		11
				FILL MATERIALS		
			0.4'	Black, coals, cinders, crushed Gravel, moist, no odor	0.0	
2					0.0	10
			3.9'	Light brown, c SAND, moist, no odor		
4	S-2 4' - 8'	3.3'	4.0'	As above, moist, no odor	0.0	19
6					0.0	20
8	S-3 8' - 12'	2.9'	8.0'	As above, moist, no odor	0.0	11
10					0.0	10
				Refusal @ 10.3' BGS		
12	S-4 12' - 16'					
14						
16	S-5 16' - 20'					
18						

WATER LEVEL DATA			BOTTOM OF	BOTTOM OF	GROUNDWATER
DATE	TIME	ELAPSED TIME	CASING	BORING	ENCOUNTERED
				10.3'	No

NOTES:

GENERAL NOTES
1) STRATIFICATION LINES REPRESENT APPROXIMATE BOUNDARY BETWEEN SOIL TYPES, TRANSITIONS MAY BE GRADUAL.
2) WATER LEVEL READINGS HAVE BEEN MADE AT TIMES AND UNDER CONDITIONS STATED, FLUCTUATIONS OF GROUNDWATER
3) Abbreviations
and = 35 to 50 %
some = 20 to 35%
little = 10 to 20%
trace = 1 to 10%
c = coarse
m = medium
f = fine
vf = very fine
BGS = Below the Ground Surface
NA = Not Applicable

BORING: SG-6

LABELLA Associates, D.P.C.
300 STATE STREET, ROCHESTER, NY
ENVIRONMENTAL ENGINEERING CONSULTANTS

TEST BORING LOG

690 St. Paul Street, Site C828159
690 St. Paul Street, Rochester, NY 14605

BORING: **BW-14**
SHEET 1 OF 1
JOB: **209280**
CHKD BY:

CONTRACTOR: Parratt Wolf
DRILLER: Parratt Wolf
LABELLA REPRESENTATIVE: MAW

BORING LOCATION: AOC #6
GROUND SURFACE ELEVATION: NA
START DATE: 2/25/2015 END DATE: 2/25/2015

TIME: 900 TO 1000
DATUM: NA
WEATHER: Cloudy, 10° F

TYPE OF DRILL RIG: Geoprobe® Rotary Drill Rig
AUGER SIZE AND TYPE: NA
OVERBURDEN SAMPING METHOD: Direct Push

DRIVE SAMPLER TYPE:
INSIDE DIAMETER: ~4"
OTHER:

DEPTH (FT)	SAMPLE DATA: SAMPLE NO. AND DEPTH	SAMPLE DATA: SAMPLE RUN/RECOVERY	SAMPLE DATA: STRATA CHANGE	VISUAL MATERIALS CLASSIFICATION	PID FIELD SCREEN (PPM)	REMARKS
0		0' - 4' / 48"		Light brown mf SAND (Backfill), dry, no odor	0.0	
2					0.0	
					0.0	
					0.0	
4			4'		0.0	
		4' - 8' / 40"		Light brown mf SAND (Backfill), moist, no odor	0.0	
6					0.0	
					0.0	
					0.0	
8		8' - 9' / 40"	8'	Light brown mf SAND (Backfill), saturated, no odor	0.0	
					0.0	
10		No recovery		Bedrock encountered @ 9' BGS		
12			12'			
		No recovery				
14				Boring concluded @13' BGS		
16						

WATER LEVEL DATA			DEPTH (FT)		
DATE	TIME	ELASPED TIME	BOTTOM OF CASING	BOTTOM OF BORING	GROUNDWATER ENCOUNTERED
			13'	13'	~8'

NOTES:

GENERAL NOTES
1) STRATIFICATION LINES REPRESENT APPROXMATE BOUNDARY BETWEEN SOIL TYPES, TRANSITIONS MAY BE GRADUAL.
2) WATER LEVEL READINGS HAVE BEEN MADE AT TIMES AND UNDER CONDITIONS STATED, FLUCTUATIONS OF GROUNDWATER MAY OCCUR DUE TO OTHER FACTORS THAN THOSE PRESENT AT THE TIME MEASUREMENTS WERE MADE.
3) ABBREVIATIONS:
and = 35 - 50% C = Coarse BGS = Below Ground Surface
some = 20 - 35% M = Medium NA = Not Applicable
little = 10 - 20% F = Fine A = Angular R = Rounded
trace = 1 - 10% VF = Very Fine SA= Subangular SR = Subrounded

BORING: **BW-14**

LABELLA Associates, D.P.C.
300 STATE STREET, ROCHESTER, NY
ENVIRONMENTAL ENGINEERING CONSULTANTS

TEST BORING LOG

690 St. Paul Street, Site C828159
690 St. Paul Street, Rochester, NY 14605

BORING: **BW-15**
SHEET 1 OF 1
JOB: **209280**
CHKD BY:

CONTRACTOR: Parratt Wolf
DRILLER: Parratt Wolf
LABELLA REPRESENTATIVE: MAW

BORING LOCATION: AOC #6
GROUND SURFACE ELEVATION: NA
START DATE: 2/25/2015 END DATE: 2/25/2015

TIME: 11 TO 1230
DATUM: NA
WEATHER: Cloudy, 10° F

TYPE OF DRILL RIG: Geoprobe® Rotary Drill Rig
AUGER SIZE AND TYPE: NA
OVERBURDEN SAMPING METHOD: Direct Push

DRIVE SAMPLER TYPE:
INSIDE DIAMETER: ~4"
OTHER:

DEPTH (FT)	SAMPLE DATA: SAMPLE NO. AND DEPTH	SAMPLE DATA: SAMPLE RUN/RECOVERY	SAMPLE DATA: STRATA CHANGE	VISUAL MATERIALS CLASSIFICATION	PID FIELD SCREEN (PPM)	REMARKS
0		0' - 4' / 42"		Light brown mf SAND (Backfill), dry, no odor	0.0 0.0 0.0 0.0 0.0	
4		4' - 8' / 40"	4'	Light brown mf SAND (Backfill), moist, no odor	0.0 0.0 0.0 0.0 0.0	
8		8' - 9' / 40"	8'	Light brown mf SAND (Backfill), moist, no odor	0.0 0.0	
10		No recovery		Bedrock encountered @ 9' BGS		
12		No recovery	12'			
14				Boring concluded @13' BGS		
16						

WATER LEVEL DATA			DEPTH (FT)		
DATE	TIME	ELASPED TIME	BOTTOM OF CASING	BOTTOM OF BORING	GROUNDWATER ENCOUNTERED
			13'	13'	~8'

NOTES:

GENERAL NOTES
1) STRATIFICATION LINES REPRESENT APPROXMATE BOUNDARY BETWEEN SOIL TYPES, TRANSITIONS MAY BE GRADUAL.
2) WATER LEVEL READINGS HAVE BEEN MADE AT TIMES AND UNDER CONDITIONS STATED, FLUCTUATIONS OF GROUNDWATER MAY OCCUR DUE TO OTHER FACTORS THAN THOSE PRESENT AT THE TIME MEASUREMENTS WERE MADE.
3) ABBREVIATIONS:

and = 35 - 50%	C = Coarse	BGS = Below Ground Surface	
some = 20 - 35%	M = Medium	NA = Not Applicable	
little = 10 - 20%	F = Fine	A = Angular	R = Rounded
trace = 1 - 10%	VF = Very Fine	SA= Subangular	SR = Subrounded

BORING: **BW-15**

LABELLA Associates, D.P.C.
300 STATE STREET, ROCHESTER, NY
ENVIRONMENTAL ENGINEERING CONSULTANTS

TEST BORING LOG

690 St. Paul Street, Site C828159
690 St. Paul Street, Rochester, NY 14605

BORING: **BW-16**
SHEET 1 OF 1
JOB: **209280**
CHKD BY:

CONTRACTOR: Parratt Wolf
DRILLER: Parratt Wolf
LABELLA REPRESENTATIVE: MAW

BORING LOCATION: AOC #6
GROUND SURFACE ELEVATION: NA
START DATE: 2/25/2015 END DATE: 2/25/2015

TIME: 1330 TO 1430
DATUM: NA
WEATHER: Cloudy, 10° F

TYPE OF DRILL RIG: Geoprobe® Rotary Drill Rig
AUGER SIZE AND TYPE: NA
OVERBURDEN SAMPING METHOD: Direct Push

DRIVE SAMPLER TYPE:
INSIDE DIAMETER: ~4"
OTHER:

DEPTH (FT)	SAMPLE DATA: SAMPLE NO. AND DEPTH	SAMPLE DATA: SAMPLE RUN/RECOVERY	SAMPLE DATA: STRATA CHANGE	VISUAL MATERIALS CLASSIFICATION	PID FIELD SCREEN (PPM)	REMARKS
0		0' - 4' / 42"		Light brown mf SAND (Backfill), dry, no odor	0.0 0.0 0.0 0.0 0.0	
4		4' - 8' / 40"	4'	Light brown mf SAND (Backfill), moist, no odor	0.0 0.0 0.0 0.0 0.0	
8		8' - 9' / 36"	8'	Light brown mf SAND (Backfill), saturated, no odor	0.0 0.0	
10				Bedrock encountered @ 9' BGS		
12			12'			
14				Boring concluded @13' BGS		
16						

WATER LEVEL DATA			DEPTH (FT)		
DATE	TIME	ELASPED TIME	BOTTOM OF CASING	BOTTOM OF BORING	GROUNDWATER ENCOUNTERED
			13'	13'	~8'

NOTES:

GENERAL NOTES
1) STRATIFICATION LINES REPRESENT APPROXMATE BOUNDARY BETWEEN SOIL TYPES, TRANSITIONS MAY BE GRADUAL.
2) WATER LEVEL READINGS HAVE BEEN MADE AT TIMES AND UNDER CONDITIONS STATED, FLUCTUATIONS OF GROUNDWATER MAY OCCUR DUE TO OTHER FACTORS THAN THOSE PRESENT AT THE TIME MEASUREMENTS WERE MADE.
3) ABBREVIATIONS:

and = 35 - 50%	C = Coarse	BGS = Below Ground Surface		
some = 20 - 35%	M = Medium	NA = Not Applicable		
little = 10 - 20%	F = Fine	A = Angular	R = Rounded	
trace = 1 - 10%	VF = Very Fine	SA= Subangular	SR = Subrounded	

BORING: **BW-16**

LABELLA Associates, P.C.

300 STATE STREET, ROCHESTER, NY

TEST BORING LOG

PROJECT:
690 Saint Paul Street
Rochester, New York

BORING: BW-5
SHEET 1 OF 2
JOB: 209280
CHKD BY: ED

CONTRACTOR: Nothnagle Drilling, Inc.
DRILLER: Kevin Bush
LABELLA REPRESENTATIVE: E. Dumrese

BORING LOCATION:
GROUND SURFACE ELEVATION
START DATE: 10/20/2010

Time:
DATUM:

TYPE OF DRILL RIG: Brainard-Kilman Rotary Drill Rig
AUGER SIZE AND TYPE: 6 5/8" Hollow Stem Augers
OVERBURDEN SAMPING METHOD: Split-Spoon

DRIVE SAMPLER TYPE: 140 lb. hammer
INSIDE DIAMETER:
OTHER:

DEPTH	SAMPLE DEPTH	Blow Counts	SAMPLE NO. AND RECOVERY	STRATA CHANGE	VISUAL CLASSIFICATION	PID FIELD SCREEN (PPM)	Radiation Meter Rdg. (µRem?)
	0.0	1		0.0'	Topsoil / Grass		
1		5	S-1	0.3'	Brown, mc SAND, little Silt and Gravel, moist, no odor	0.0	2.4
		5	0.8'				
2	2.0	4		2.0'	As above, wet @~3.4' BGS		
	2.0	2					
3		2	S-2				
		8	1.0'			270	3.5
4	4.0	15		4.0'	Crushed pink sandstone		
	4.0	24	S-3	4.5'	Black to grey, SILT and mf SAND, saturated, odor,		
5	4.9	100 / 5	0.7'	4.7'	Weathered bedrock	27.9	2.2
6					Spoon refusal and apparent top of bedrock at 4.9 ft.		
7							
8					Drilled rock socket with nominal 6" roller bit to 8.7 ft.		
9					**See page 2 for rock core log.**		
10							
11							
12							
13							
14							
15							
16							
17							
18							
19							
20							

WATER LEVEL DATA				DEPTH (FT)		
DATE	TIME		ELASPED TIME	BOTTOM OF CASING	BOTTOM OF BORING	GROUNDWATER ENCOUNTERED
				8.7-Ft.	18.7-Ft.	3.4-Ft.

NOTES:
- Groundwater sample collected with hollow stem augers in place on top of socket.
- Some NAPL observed on tubing and on Groundwater during sampling.

GENERAL NOTES

1) STRATIFICATION LINES REPRESENT APPROXMATE BOUNDARY BETWEEN SOIL TYPES, TRANSITIONS MAY BE GRADUAL.
2) WATER LEVEL READINGS HAVE BEEN MADE AT TIMES AND UNDER CONDITIONS STATED, FLUCTUATIONS OF GROUNDWATER MAY OCCURE DUE TO OTHER FACTORS THAN THOSE PRESENT AT THE TIME MEASUREMENTS WERE MADE

LABELLA Associates, P.C.

300 STATE STREET, ROCHESTER, NY

ROCK CORE LOG

PROJECT:
690 Saint Paul Street
Rochester, New York

BORING NO: BW-5
SHEET 2 OF 2
PROJECT NO: 209280

CONTRACTOR: Nothnagle drilling | BORING LOCATION: | START DATE: 10/20/10
DRILLER: K. Bush | GRD SURF ELEVATION: | FINISH DATE: 10/21/10
RIG TYPE: Brainard-Kilman Rotary Drill Rig | DATUM: | LABELLA REP: E. Dumrese
CSG TYPE/DIAM: | CORE BARREL TYPE / DIAMETER:

Depth (ft.)	Drill Rate (min per ft)	Core Run No. / Depth	Recovery (in / %)	RQD [1] (in / %)	Weathering	Strata Change (Depth in ft)	Visual Classification and Remarks	Other Data
8							**See Page 1 for Soil Boring Log** **Began coring at 8.7 ft.**	
9		8.7					Medium gray, fine-grained, medium to thin bedded, siliceous **Dolostone,** with dark gray to black argillaceous partings, and frequent pits and vugs. Secondary crystallization in some partings and vugs.	
10		**R1**	60"	9"	Slight -		- DECEW DOLOSTONE-	
11			100%	15%	Moderate		- Closely Spaced Bedding plane joints 8.7-10.0, 11.2-13.0	
12							- High angle fractures 8.7-8.9, 10.3-10.4, 11.3-11.5 and 12.0-12.1 ft.	
13		13.7						
14		13.7					R2 - Same	
15							- small vugs at 14.1, 14.6 and 16.2	
16		**R2**	61"	42"	Slight			
17			100%	69%				
18		18.8						
19							**Bottom of Boring at 18.7' BGS**	
20							**Completed as Open Rock Well**	

WATER LEVEL DATA

DATE	TIME	ELAPSED TIME	DEPTH (FT) BOTTOM OF CASING	DEPTH (FT) BOTTOM OF BORING	DEPTH (FT) WATER LEVEL
10/22/2010	8:00	16 hrs.	8.7-Ft.	18.7-Ft.	8.28-Ft.

OTHER REMARKS
Lost ~2 gal. water

GENERAL NOTES
1) For runs with greater than 100% recovery, RQD is computed using total core recovered.
2) Measured water levels may not represent actual groundwater levels.

* - Free product observed on water level meter

LABELLA Associates, P.C.

300 STATE STREET, ROCHESTER, NY

TEST BORING LOG

PROJECT:
690 Saint Paul Street
Rochester, New York

BORING: BW-6
SHEET 1 OF 2
JOB: 209280
CHKD BY: ED

CONTRACTOR: Nothnagle Drilling, Inc.
DRILLER: Kevin Bush
LABELLA REPRESENTATIVE: E. Dumrese

BORING LOCATION:
GROUND SURFACE ELEVATION
START DATE: 10/21/2010

Time:
DATUM:

TYPE OF DRILL RIG: Brainard-Kilman Rotary Drill Rig
AUGER SIZE AND TYPE: 6 5/8" Hollow Stem Augers
OVERBURDEN SAMPING METHOD: Split-Spoon

DRIVE SAMPLER TYPE: 140 lb. hammer
INSIDE DIAMETER:
OTHER:

DEPTH	SAMPLE DEPTH	Blow Counts	SAMPLE NO. AND RECOVERY	STRATA CHANGE	VISUAL CLASSIFICATION	PID FIELD SCREEN (PPM)	Radiation Meter Rdg. (µRem?)
	0.0	NA		0.0'	Concrete		
1		NA	S-1	0.6'	Brown, SILT, little mf Sand and Gravel, moist, no odor	0.0	1.4
		NA	2.8'				
2	2.0	NA		2.0'			
	2.0	NA					
3		NA	S-2				
		NA				0.0	1.4
4	4.0	NA		4.0'	Spoon refusal and apparent top of bedrock at 4.0 ft.		
5					Drilled rock socket with nominal 6" roller bit to 4.5 ft.		
6							
7					**See page 2 for rock core log.**		
8							
9							
10							
11							
12							
13							
14							
15							
16							
17							
18							
19							
20							

NOTES:

WATER LEVEL DATA				DEPTH (FT)		
DATE	TIME		ELASPED TIME	BOTTOM OF CASING	BOTTOM OF BORING	GROUNDWATER ENCOUNTERED
				4.5-Ft.	14.5-Ft.	Not Encountered

GENERAL NOTES

1) STRATIFICATION LINES REPRESENT APPROXMATE BOUNDARY BETWEEN SOIL TYPES, TRANSITIONS MAY BE GRADUAL.
2) WATER LEVEL READINGS HAVE BEEN MADE AT TIMES AND UNDER CONDITIONS STATED, FLUCTUATIONS OF GROUNDWATER MAY OCCURE DUE TO OTHER FACTORS THAN THOSE PRESENT AT THE TIME MEASUREMENTS WERE MADE

LABELLA Associates, P.C.

300 STATE STREET, ROCHESTER, NY

ROCK CORE LOG

PROJECT:
690 Saint Paul Street
Rochester, New York

BORING NO: BW-6
SHEET 2 OF 2
PROJECT NO: 209280

CONTRACTOR: Nothnagle drilling
DRILLER: K. Bush
RIG TYPE: Diedrich Drill, Inc. - D-25 Skid Rig
CSG TYPE/DIAM:
BORING LOCATION:
GRD SURF ELEVATION:
DATUM:
CORE BARREL TYPE / DIAMETER:
START DATE: 10/21/10
FINISH DATE: 10/22/10
LABELLA REP: E. Dumrese

Depth (ft.)	Drill Rate (min per ft)	Core Run No. / Depth	Recovery (in / %)	RQD [1] (in / %)	Weathering	Strata Change (Depth in ft)	Visual Classification and Remarks	Other Data
1								
2							**See Page 1 for Soil Boring Log**	
3								
4								
		4.5			Severe		**Began coring at 4.5 ft.**	
5							Medium gray, fine-grained, medium to thin bedded, siliceous **Dolostone,**	
6					Slight		with dark gray to black argillaceous partings, and frequent pits and vugs. Secondary crystallization in some partings and vugs.	
7		**R1**	60"	18"			- DECEW DOLOSTONE-	
			100%	30%	Severely		Fractured zone from 4.5'-5.2'	
8					Slight - Moderate		Irregular vertical fractures from 6.1'-6.2'	
							Severely fractured zone from 7.1'-7.2'	
9		9.5			Moderate		Irregularly curved vertical joint from 7.3'-7.7'	
		9.5			Slight		Severely weathered seam at 8.8'	
10					Moderate			
11								
12		**R2**	56"	40"				
			93%	67%	Slight			
13								
14		14.5						
15							**Bottom of Boring at 14.5' BGS**	
16							**Completed as Open Rock Well**	
17								
18								
19								
20								

WATER LEVEL DATA

DATE	TIME	ELAPSED TIME	DEPTH (FT) BOTTOM OF CASING	DEPTH (FT) BOTTOM OF BORING	WATER LEVEL
			4.5-Ft.	14.5-Ft.	

OTHER REMARKS

GENERAL NOTES

1) For runs with greater than 100% recovery, RQD is computed using total core recovered.

2) Measured water levels may not represent actual groundwater levels.

LABELLA Associates, P.C.

300 STATE STREET, ROCHESTER, NY

TEST BORING LOG

PROJECT:
690 Saint Paul Street
Rochester, New York

BORING: BW-7
SHEET 1 OF 2
JOB: 209280
CHKD BY: ED

CONTRACTOR: Nothnagle Drilling, Inc.
DRILLER: Kevin Bush
LABELLA REPRESENTATIVE: E. Dumrese

BORING LOCATION:
GROUND SURFACE ELEVATION
START DATE: 10/21/2010

Time:
DATUM:

TYPE OF DRILL RIG: Brainard-Kilman Rotary Drill Rig
AUGER SIZE AND TYPE: 6 5/8" Hollow Stem Augers
OVERBURDEN SAMPING METHOD: Split-Spoon

DRIVE SAMPLER TYPE: 140 lb. hammer
INSIDE DIAMETER:
OTHER:

DEPTH	SAMPLE DEPTH	Blow Counts	SAMPLE NO. AND RECOVERY	STRATA CHANGE	VISUAL CLASSIFICATION	PID FIELD SCREEN (PPM)	Radiation Meter Rdg. (µRem?)
	0.0	NA		0.0'	Concrete (sidewalk)		
1		NA	S-1	0.7'	Brown, SILT, some Gravel and Clay, moist, no odor	0.0	1.4
		13	0.8'				
2	2.0	14					
	2.0	18		2.0'	As above, moist, no odor	0.0	3.8
3		6	S-2				
		19	1.1'				
4	4.0	22					
	4.0	29		4.0'	As above, moist, no odor	0.0	3.9
5		9	S-3				
		14	1.2'				
6	6.0	11					
	6.0	18		6.0'	Brown, mf SAND, trace Silt, moist, no odor	0.0	11.1
7		15	S-4				
		17	1.7'				
8	8.0	40		8.0'	As above, moist, no odor		
	8.0 8.5	50 / 5	S-5	8.2'	Light brown, SILT, some c Gravel, wet, no odor	0.0	1.9
9					Spoon refusal and apparent top of bedrock at 8.5 ft.		
10							
11					Drilled rock socket with nominal 6" roller bit to 11.0 ft.		
12							
13					**See page 2 for rock core log.**		
14							
15							
16							
17							
18							
19							
20							

WATER LEVEL DATA				DEPTH (FT)			NOTES:
DATE	TIME		ELASPED TIME	BOTTOM OF CASING	BOTTOM OF BORING	GROUNDWATER ENCOUNTERED	
				11.0-Ft.	21.0-Ft.	7.0-Ft.	

GENERAL NOTES

1) STRATIFICATION LINES REPRESENT APPROXMATE BOUNDARY BETWEEN SOIL TYPES, TRANSITIONS MAY BE GRADUAL.
2) WATER LEVEL READINGS HAVE BEEN MADE AT TIMES AND UNDER CONDITIONS STATED, FLUCTUATIONS OF GROUNDWATER MAY OCCURE DUE TO OTHER FACTORS THAN THOSE PRESENT AT THE TIME MEASUREMENTS WERE MADE

LABELLA Associates, P.C.

300 STATE STREET, ROCHESTER, NY

ROCK CORE LOG

PROJECT:
690 Saint Paul Street
Rochester, New York

BORING NO: BW-7
SHEET 2 OF 2
PROJECT NO: 209280

CONTRACTOR: Nothnagle drilling
DRILLER: K. Bush
RIG TYPE: Brainard-Kilman Rotary Drill Rig
CSG TYPE/DIAM:
BORING LOCATION:
GRD SURF ELEVATION:
DATUM:
CORE BARREL TYPE / DIAMETER:
START DATE: 10/21/10
FINISH DATE: 10/22/10
LABELLA REP: E. Dumrese

Depth (ft.)	Drill Rate (min per ft)	Core Run No. / Depth	Recovery (in / %)	RQD (1) (in / %)	Weathering	Strata Change (Depth in ft)	Visual Classification and Remarks	Other Data
9							**See Page 1 for Soil Boring Log**	
10								
11							**Began coring at 11.0 ft.**	
		11.0			Slight		Medium gray, fine-grained, medium to thin bedded, siliceous **Dolostone,**	
12					Severe		with dark gray to black argillaceous partings, and frequent pits and vugs.	
					Slight -		Secondary crystallization in some partings and vugs.	
13		**R1**	53"	5"	Moderate		- DECEW DOLOSTONE-	
			88%	8%	Severe			
14					Moderate		Short fractrued zones at: 11.7', 12.5', 12.9', and 13.9'	
15							Moderate dipping joint at 14.4'	
							Very closely spaced partings from 15.7' to 17.5'	
16		16.0			Slight -			
		16.0			Moderate		Vertical joint at 17.4'	
17								
18					Moderate			
		R2	58"	22"				
19			98%	37%				
20					Slight -			
					Moderate			
21		21.0						
22							**Bottom of Boring at 21.0' BGS**	
							Completed as Open Rock Well	
23								
24								
25								
26								
27								
28								
29								

WATER LEVEL DATA

DATE	TIME	ELAPSED TIME	DEPTH (FT) BOTTOM OF CASING	DEPTH (FT) BOTTOM OF BORING	WATER LEVEL
			11.0-Ft.	21.0-Ft.	

OTHER REMARKS

GENERAL NOTES

1) For runs with greater than 100% recovery, RQD is computed using total core recovered.

2) Measured water levels may not represent actual groundwater levels.

LABELLA Associates, P.C.

300 STATE STREET, ROCHESTER, NY

TEST BORING LOG

PROJECT:
690 Saint Paul Street
Rochester, New York

BORING: BW-8
SHEET 1 OF 2
JOB: 209280
CHKD BY: ED

CONTRACTOR: Nothnagle Drilling, Inc.
DRILLER: Kevin Bush
LABELLA REPRESENTATIVE: E. Dumrese

BORING LOCATION:
GROUND SURFACE ELEVATION
START DATE: 10/19/2010

Time:
DATUM:

TYPE OF DRILL RIG: Brainard-Kilman Rotary Drill Rig
AUGER SIZE AND TYPE: 6 5/8" Hollow Stem Augers
OVERBURDEN SAMPING METHOD: Split-Spoon

DRIVE SAMPLER TYPE: 140 lb. hammer
INSIDE DIAMETER:
OTHER:

DEPTH	SAMPLE DEPTH	Blow Counts	SAMPLE NO. AND RECOVERY	STRATA CHANGE	VISUAL CLASSIFICATION	PID FIELD SCREEN (PPM)	Radiation Meter Rdg. (µRem?)
	0.0	18		0.0'	Asphalt		
1		18	S-1	0.2'	Black to grey, mc SAND and GRAVEL, dry, no odor	0.0	3.0
		13	0.4'				
2	2.0	11					
	2.0	8		2.0'	As above, moist, no odor		
3		6	S-2			No recovery	No Recovery
		7	0.0'				
4	4.0	10					
	4.0	3		4.0'	Brown, SILT, trace Clay and f Sand, moist, no odor	0.1	3.9
5		6	S-3				
		10	1.6'				
6	6.0	10					
	6.0	9		6.0'	Brown, SILT, some mf Sand, trace Clay, moist, no odor	0.2	3.8
7		10	S-4				
		14	1.9'				
8	8.0	12					
	8.0	7		8.0'	Light brown, SILT, little mf Sand and Gravel, moist, no odor	5.4	3.9
9		8	S-5	9.0'	Light brown, mf SAND, little Silt, wet, no odor		
		13	1.6'				
10	10.0	20					
	10.0	40	S-6	10.0'	Brown, SILT, little mf Sand, moist, no odor	22.1	4.0
11	11.5	50 / 21	1.1'	10.9'	Weathered bedrock		
12					Spoon refusal and apparent top of bedrock at 11.5 ft.		
13							
14					Drilled rock socket with nominal 6" roller bit to 14.5 ft.		
15					**See page 2 for rock core log.**		
16							
17							
18							
19							
20							

NOTES:

WATER LEVEL DATA				DEPTH (FT)		
DATE	TIME		ELASPED TIME	BOTTOM OF CASING	BOTTOM OF BORING	GROUNDWATER ENCOUNTERED
				14.5-Ft.	24.5-Ft.	

GENERAL NOTES

1) STRATIFICATION LINES REPRESENT APPROXMATE BOUNDARY BETWEEN SOIL TYPES, TRANSITIONS MAY BE GRADUAL.
2) WATER LEVEL READINGS HAVE BEEN MADE AT TIMES AND UNDER CONDITIONS STATED, FLUCTUATIONS OF GROUNDWATER MAY OCCURE DUE TO OTHER FACTORS THAN THOSE PRESENT AT THE TIME MEASUREMENTS WERE MADE

LABELLA Associates, P.C.

300 STATE STREET, ROCHESTER, NY

ROCK CORE LOG

PROJECT:
690 Saint Paul Street
Rochester, New York

BORING NO: BW-8
SHEET 2 OF 2
PROJECT NO: 209280

CONTRACTOR: Nothnagle drilling
DRILLER: K. Bush
RIG TYPE: Brainard-Kilman Rotary Drill Rig
CSG TYPE/DIAM:
BORING LOCATION:
GRD SURF ELEVATION:
DATUM:
CORE BARREL TYPE / DIAMETER:
START DATE: 10/19/10
FINISH DATE: 10/20/10
LABELLA REP: E. Dumrese

Depth (ft.)	Drill Rate (min per ft)	Core Run No. / Depth	Recovery (in / %)	RQD (1) (in / %)	Weathering	Strata Change (Depth in ft)	Visual Classification and Remarks	Other Data
13							**See Page 1 for Soil Boring Log**	
14							**Began coring at 14.5 ft.**	
15		14.5			Slight		Medium gray, fine-grained, medium to thin bedded, siliceous **Dolostone,**	
					Moderate		with dark gray to black argillaceous partings, and frequent pits and vugs.	
16							Secondary crystallization in some partings and vugs.	
		R1		39"			- DECEW DOLOSTONE-	
17				65%				
							Highly fractured zone from 15.0' to 15.2'	
18					Slight			
							large vug at: 16.3'	
19		19.5						
20		19.5						
21								
22		**R2**		48"				
				80%	Slight			
23								
24		24.5					Low joint at: 23.0'	
25							**Bottom of Boring at 24.5' BGS**	
26							**Completed as Open Rock Well**	
27								
28								
29								
30								
31								
32								

WATER LEVEL DATA

DATE	TIME	ELAPSED TIME	DEPTH (FT) BOTTOM OF CASING	DEPTH (FT) BOTTOM OF BORING	WATER LEVEL
			14.5-Ft.	24.5-Ft.	

OTHER REMARKS

GENERAL NOTES

1) For runs with greater than 100% recovery, RQD is computed using total core recovered.

2) Measured water levels may not represent actual groundwater levels.

APPENDIX 4

HEALTH AND SAFETY AND COMMUNITY AIR MONITORING PLAN

LABELLA Associates, D.P.C.
Engineering
Architecture
Environmental
Planning

Site Health and Safety Plan

Location:

690 Saint Paul Street
Rochester, New York 14605

Prepared For:

Genesee Valley Real Estate Company
First Federal Plaza
28 East Main Street, Suite 500
Rochester, New York 14614

LaBella Project No. 209280

October 2015

Table of Contents

Page

SITE HEALTH AND SAFETY PLAN i
EMERGENCY CONTACTS ii
MAP AND DIRECTIONS TO THE MEDICAL FACILITY iii

1.0 Introduction 1

2.0 Responsibilities 1

3.0 Activities Covered 1

4.0 Work Area Access and Site Control 1

5.0 Potential Health and Safety Hazards 1
- 5.1 Hazards Due to Heavy Machinery 2
- 5.2 Excavation Hazards 2
- 5.3 Cuts, Punctures and Other Injuries 2
- 5.4 Injury Due to Exposure of Chemical Hazards 3
- 5.5 Injuries Due to Extreme Hot or Cold Weather Conditions 3
- 5.6 Potential Exposure to Asbestos 3

6.0 Work Zones 4

7.0 Decontamination Procedures 4

8.0 Personal Protective Equipment 4

9.0 Air Monitoring 5

10.0 Emergency Action Plan 5

11.0 Medical Surveillance 5

12.0 Employee Training 5

SITE HEALTH AND SAFETY PLAN

Project Title:	690 Saint Paul Street Brownfield Cleanup Program
Project Number:	209280
Project Location (Site):	690 Saint Paul Street, Rochester, New York 14605-1742
Environmental Director:	Gregory Senecal, CHMM
Project Manager:	Dan Noll, P.E.
Plan Review Date:	_____
Plan Approval Date:	_____
Plan Approved By:	_____ Mr. Richard Rote, CIH
Site Safety Supervisor:	Kyle Miller
Site Contact:	To Be Determined
Safety Director:	Rick Rote, CIH
Proposed Date(s) of Field Activities:	To Be Determined
Site Conditions:	Slightly sloping, encompassing approximately 4.73 acres
Site Environmental Information Provided By:	Remedial Investigation Reports by LaBella Associates, D. P.C.
Air Monitoring Provided By:	LaBella Associates, D.P.C.
Site Control Provided By:	Contractor(s)

EMERGENCY CONTACTS

	Name	Phone Number
Ambulance:	As Per Emergency Service	911
Hospital Emergency:	Rochester General Hospital	585-922-4000
Poison Control Center:	Finger Lakes Poison Control	585-273-4621
Police (local, state):	Monroe County Sheriff	911
Fire Department:	Rochester Fire Department	911
Site Contact:	Chris Gullace	Cell: 585-330-7173
Agency Contact:	NYSDEC – Frank Sowers, P.E. NYSDOH – Bridget Boyd MCDPH – John Frazer	585-226-5357 518-402-7860 585-753-2991
Environmental Director:	Greg Senecal, CHMM	Direct: 585-295-6243 Cell: 585-752-6480
Project Manager:	Dan Noll, P.E.	Direct: 585-295-611 Cell: 585-301-8458
Site Safety Supervisor:	Kyle Miller	Direct: 585-295-6295
Safety Director	Rick Rote, CIH	Direct: 585-295-6241

MAP AND DIRECTIONS TO THE MEDICAL FACILITY - ROCHESTER GENERAL HOSPITAL

Total Time: 8 minutes
Total Distance: 3.50 miles

Start: 690 Saint Paul St, Rochester, NY 14605-1742

START	1: Start out going SOUTHEAST on ST PAUL ST toward LOWELL ST.	0.1 mi
	2: Turn LEFT onto UPPER FALLS BLVD.	0.6 mi
	3: Turn LEFT onto JOSEPH AVE.	1.1 mi
	4: JOSEPH AVE becomes SENECA AVE.	0.3 mi
	5: Turn RIGHT onto RT-104.	1.2 mi
	6: Turn RIGHT onto PORTLAND AVE/CR-114.	0.2 mi
END	7: End at 1425 Portland Ave Rochester, NY 14621-3001	

End: 1425 Portland Ave, Rochester, NY 14621-3001

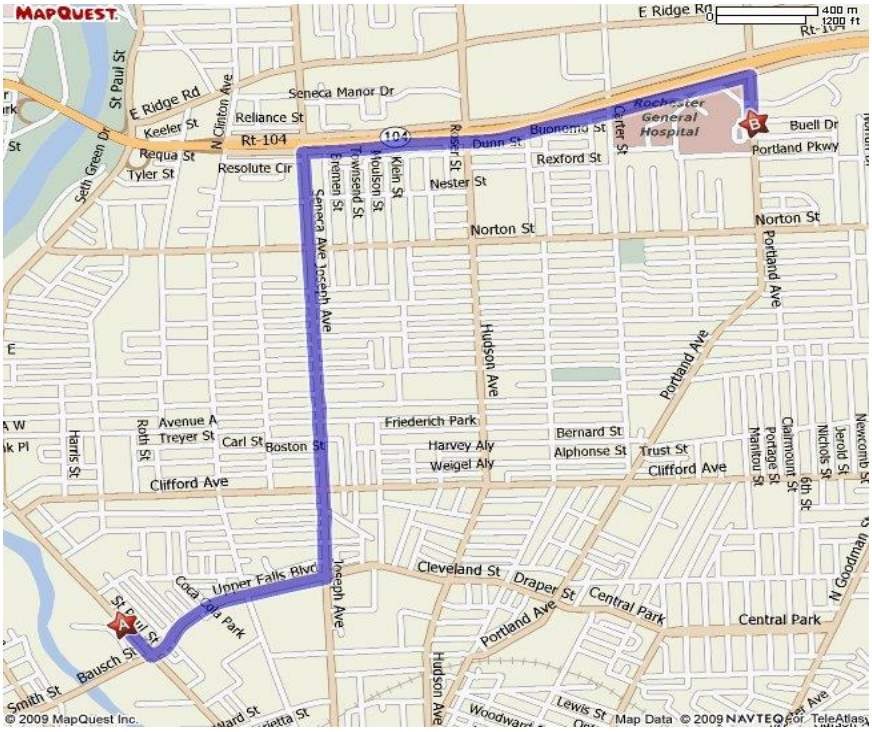

LABELLA

1.0 Introduction

The purpose of this Health and Safety Plan (HASP) it to provide guidelines for responding to potential health and safety issues that may be encountered during the remedial actions to be performed at the Site located at 690 Saint Paul Street in the City of Rochester, Monroe County, New York. This HASP only reflects the policies of LaBella Associates D.P.C. The requirements of this HASP are applicable to all approved LaBella personnel at the work site. This document's project specifications and the Community Air Monitoring Plan (CAMP) are to be consulted for guidance in preventing and quickly abating any threat to human safety or the environment. The provisions of the HASP were developed in general accordance with 29 CFR 1910 and 29 CFR 1926 and do not replace or supersede any regulatory requirements of the USEPA, NYSDEC, OSHA or any other regulatory body.

2.0 Responsibilities

This HASP presents guidelines to minimize the risk of injury to project personnel, and to provide rapid response in the event of injury. The HASP is applicable only to activities of approved LaBella personnel and their authorized visitors. The Project Manager shall implement the provisions of this HASP for the duration of the project. It is the responsibility of each LaBella employee to follow the requirements of this HASP, and all applicable company safety procedures.

3.0 Activities Covered

The activities covered under this HASP are limited to the following:

- Management of environmental investigation and remediation activities
- Environmental monitoring
- Collection of samples
- Management of excavated soil and fill

4.0 Work Area Access and Site Control

The contractor(s) will have primary responsibility for work area access and site control. However, a minimum requirement for work area designation and control will consist of:

- Placing orange fencing around the work area;
- Placing orange fencing around any excavation required to be left open overnight;
- Donning high visibility vests, hard hats, and safety glasses on-site during IRM activities; and,
- Adhering to the Site-specific Health & Safety Plan included in Appendix 1 of this IRM Work Plan.

5.0 Potential Health and Safety Hazards

This section lists some potential health and safety hazards that project personnel may encounter at the project site and some actions to be implemented by approved personnel to control and reduce the associated risk to health and safety. This is not intended to be a complete listing of any and all potential health and safety hazards. New or different hazards may be encountered as site environmental and site work conditions change. The suggested actions to be taken under this plan are not to be substituted for

good judgment on the part of project personnel. At all times, the Site Safety Officer has responsibility for site safety and his or her instructions must be followed.

5.1 Hazards Due to Heavy Machinery

Potential Hazard:
Heavy machinery including trucks, excavators, backhoes, etc will be in operation at the site. The presence of such equipment presents the danger of being struck or crushed. Use caution when working near heavy machinery.

Protective Action:
Make sure that operators are aware of your activities, and heed operator's instructions and warnings. Wear bright colored clothing and walk safe distances from heavy equipment. A hard hat, safety glasses and steel toe shoes are required.

5.2 Excavation Hazards

Potential Hazard:
Excavations and trenches can collapse, causing injury or death. Edges of excavations can be unstable and collapse. Toxic and asphyxiant gases can accumulate in confined spaces and trenches. Activities that require working within the excavation will require air monitoring in the breathing zone (refer to Section 9.0).

Excavations left open create a fall hazard which can cause injury or death.

Protective Action:
Personnel must receive approval from the Project Manager to enter an excavation for any reason. Subsequently, approved personnel are to receive authorization for entry from the Site Safety Officer. Approved personnel are not to enter excavations over 4 feet in depth unless excavations are adequately sloped. Additional personal protective equipment may be required based on the air monitoring.

Personnel should exercise caution near all excavations at the site as it is expected that excavation sidewalls will be unstable. All excavations will be backfilled by the end of each day. Additionally, no test pit will be left unattended during the day.

Fencing and/or barriers accompanied by "no trespassing" signs should be placed around all excavations when left open for any period of time when work is not being conducted.

5.3 Cuts, Punctures and Other Injuries

Potential Hazard:
In any excavation or construction, work site there is the potential for the presence of sharp or jagged edges on rock, metal materials, and other sharp objects. Serious cuts and punctures can result in loss of blood and infection.

Protective Action:
The Project Manager is responsible for making First Aid supplies available at the work site to treat minor injuries. The Site Safety Officer is responsible for arranging the transportation of authorized on-site personnel to medical facilities when First Aid treatment in not sufficient. Do

not move seriously injured workers. All injuries requiring treatment are to be reported to the Project Manager. Serious injuries are to be reported immediately to the Site Safety Officer

5.4 Injury Due to Exposure of Chemical Hazards

Potential Hazards:
Volatile organic vapors from petroleum products, chlorinated solvents or other chemicals may be encountered during excavation activities at the project work site. Inhalation of high concentrations of organic vapors can cause headache, stupor, drowsiness, confusion and other health effects. Skin contact can cause irritation, chemical burn, or dermatitis.

Protective Action:
The presence of organic vapors may be detected by their odor and by monitoring instrumentation. Approved employees will not work in environments where hazardous concentrations of organic vapors are present. Air monitoring (refer to Section 9.0 and to the CAMP) of the work area will be performed at least every 60 minutes or more often using a Photoionization Detector (PID). Personnel are to leave the work area whenever PID measurements of ambient air exceed 25 ppm for a 5 minute average. In the event that an ambient air reading for total volatile organic compound (VOC) of 25 ppm is encountered for a 5 minute average, personnel should upgrade personal protective equipment to Level C (refer to Section 8.0) and an Exclusion Zone should be established around the work area to limit and monitor access to this area (refer to Section 6.0).

5.5 Injuries Due to Extreme Hot or Cold Weather Conditions

Potential Hazards:
Extreme hot weather conditions can cause heat exhaustion, heat stress and heat stroke or extreme cold weather conditions can cause hypothermia.

Protective Action:
Precaution measures should be taken such as dress appropriately for the weather conditions and drink plenty of fluid. If personnel should suffer from any of the above conditions, proper techniques should be taken to cool down or heat up the body and taken to the nearest hospital if needed.

5.6 Potential Exposure to Asbestos

Potential Hazards:
During ground intrusive activities (e.g., test pitting or drilling) soil containing asbestos may be encountered. Asbestos is friable when dry and can be inhaled when exposed to air.

Protective Action:
The presence of asbestos can be identified through visual observation of a white magnesium silicate material. If encountered, work should be halted and a sample of the suspected asbestos should be collected and placed in a plastic sealable bag. This sample should be sent to the asbestos laboratory at LaBella Associates for analysis.

6.0 Work Zones

In the event that conditions warrant establishing various work zones (i.e., based on hazards - Section 5.4), the following work zones should be established:

Exclusion Zone (EZ):
The EZ will be established in the immediate vicinity and adjacent downwind direction of site activities that elevate breathing zone VOC concentrations to unacceptable levels based on field screening. These site activities include contaminated soil excavation and soil sampling activities. If access to the site is required to accommodate non-project related personnel then an EZ will be established by constructing a barrier around the work area (yellow caution tape and/or construction fencing). The EZ barrier shall encompass the work area and any equipment staging/soil staging areas necessary to perform the associated work. The contractor(s) will be responsible for establishing the EZ and limiting access to approved personnel. Depending on the condition for establishing the EZ, access to the EZ may require adequate PPE (e.g., Level C).

Contaminant Reduction Zone (CRZ):
The CRZ will be the area where personnel entering the EZ will don proper PPE prior to entering the EZ and the area where PPE may be removed. The CRZ will also be the area where decontamination of equipment and personnel will be conducted as necessary.

7.0 Decontamination Procedures

Upon leaving the work area, approved personnel shall decontaminate footwear as needed. Under normal work conditions, detailed personal decontamination procedures will not be necessary. Work clothing may become contaminated in the event of an unexpected splash or spill or contact with a contaminated substance. Minor splashes on clothing and footwear can be rinsed with clean water. Heavily contaminated clothing should be removed if it cannot be rinsed with water. Personnel assigned to this project should be prepared with a change of clothing whenever on site.

Personnel will use the contractor's disposal container for disposal of PPE.

8.0 Personal Protective Equipment

Generally, site conditions at this work site require level of protection of Level D or modified Level D. However, air monitoring will be conducted to determine if up-grading to Level C PPE is required (refer to Section 9.0). Descriptions of the typical safety equipment associated with Level D and Level C are provided below:

Level D:
Hard hat, safety glasses, rubber nitrile sampling gloves, steel toe construction grade boots, etc.

Level C:
Level D PPE and full or ½-face respirator and tyvek suit (if necessary). [*Note: Organic vapor cartridges are to be changed after each 8 hours of use or more frequently.*]

9.0 Air Monitoring

According to 29 CFR 1910.120(h), air monitoring shall be used to identify and quantify airborne levels of hazardous substances and health hazards in order to determine the appropriate level of employee protection required for personnel working onsite. Air monitoring will consist at a minimum of the procedures described in Appendix 2 "Site Specific CAMP". Please refer to the Site Specific CAMP for further details on air monitoring at the Site.

The Air Monitor will utilize a photoionization detector (PID) to screen the ambient air in the work areas for total Volatile Organic Compounds (VOCs) and a DustTrak tm Model 8520 aerosol monitor or equivalent for measuring particulates. Work area ambient air will generally be monitored in the work area and downwind of the work area. Air monitoring of the work areas and downwind of the work areas will be performed at least every 60 minutes or more often using a PID, and the DustTrak meter.

If ambient air PID readings of greater than 25 ppm are recorded in the breathing zone for a 5 minute average, then either personnel are to leave the work area until satisfactory readings are obtained or approved personnel may re-enter the work areas wearing at a minimum a ½ face respirator with organic vapor cartridges for an 8-hour duration (i.e., upgrade to Level C PPE). Organic vapor cartridges are to be changed after each 8 hours of use or more frequently, if necessary. If PID readings are sustained, in the work area, at levels above 25 ppm for a 5 minute average, work will be stopped immediately until safe levels of VOCs are encountered or additional PPE will be required (i.e., Level B).

If dust concentrations exceed the upwind concentration by 150 $\mu g/m^3$ (0.15 mg/m^3) consistently for a 10 minute period within the work area or at the downwind location, then LaBella personnel may not re-enter the work area until dust concentrations in the work area decrease below 150 $\mu g/m^3$ (0.15 mg/m^3), which may be accomplished by the construction manager implementing dust control or suppression measures.

10.0 Emergency Action Plan

In the event of an emergency, employees are to turn off and shut down all powered equipment and leave the work areas immediately. Employees are to walk or drive out of the Site as quickly as possible and wait at the assigned 'safe area'. Follow the instructions of the Site Safety Officer.

Employees are not authorized or trained to provide rescue and medical efforts. Rescue and medical efforts will be provided by local authorities.

11.0 Medical Surveillance

Medical surveillance will be provided to all employees who are injured due to overexposure from an emergency incident involving hazardous substances at this site.

12.0 Employee Training

Personnel who are not familiar with this site plan will receive training on its entire content and organization before working at the Site.

Individuals involved with the remedial investigation must be 40-hour OSHA HAZWOPER trained with current 8-hour refresher certification.

Table 1
Exposure Limits and Recognition Qualities

Compound	PEL-TWA (ppm)(b)(d)	TLV-TWA (ppm)(c)(d)	STEL	LEL (%)(e)	UEL (%)(f)	IDLH (ppm)(g)(d)	Odor	Odor Threshold (ppm)	Ionization Potential
Acetone	750	500	NA	2.15	13.2	20,000	Sweet	4.58	9.69
Anthracene	0.2	0.2	NA	NA	NA	NA	Faint aromatic	NA	NA
Benzene	1	0.5	5	1.3	7.9	3000	Pleasant	8.65	9.24
Benzo (a) pyrene (coal tar pitch volatiles)	0.2	0.1	NA	NA	NA	700	NA	NA	NA
Benzo (a)anthracene	NA	NA	NA	NA	NA	NA	NA	NA	NA
Benzo (b) Fluoranthene	NA	NA	NA	NA	NA	NA	NA	NA	NA
Benzo (g,h,i)perylene	NA	NA	NA	NA	NA	NA	NA	NA	NA
Benzo (k) Fluoranthene	NA	NA	NA	NA	NA	NA	NA	NA	NA
Bromodichloromethane	NA	NA	NA	NA	NA	NA	NA	NA	10.88
Carbon Disulfide	20	1	NA	1.3	50	500	Odorless or strong garlic type	0.096	10.07
Chlorobenzene	75	10	NA	1.3	9.6	2,400	Faint almond	0.741	9.07
Chloroform	50	2	NA	NA	NA	1,000	ethereal odor	11.7	11.42
Chrysene	NA	NA	NA	NA	NA	NA	NA	NA	NA
1,2-Dichloroethylene	200	200	NA	9.7	12.8	400	Acrid	NA	9.65
1,2-Dichlorobenzene	50	25	NA	2.2	9.2		Pleasant		9.07
Ethylbenzene	100	100	NA	1	6.7	2,000	Ether	2.3	8.76
Fluoranthene	NA	NA	NA	NA	NA	NA	NA	NA	NA
Fluorene	NA	NA	NA	NA	NA	NA	NA	NA	NA
Isopropylbenzene	NA	NA	NA	NA	NA	NA	NA	NA	NA
Methylene Chloride	500	50	NA	12	23	5,000	Chloroform-like	10.2	11.35
Naphthalene	10, Skin	10	NA	0.9	5.9	250	Moth Balls	0.3	8.12
n-propylbenzene	NA	NA	NA	NA	NA	NA	NA	NA	NA
Phenanthrene	NA	NA	NA	NA	NA	NA	NA	NA	NA
Pyrene	NA	NA	NA	NA	NA	NA	NA	NA	NA
p-Isopropylbenzene	NA	NA	NA	NA	NA	NA	NA	NA	NA
sec-Butylbenzene	NA	NA	NA	NA	NA	NA	NA	NA	NA
Tetrachloroethane	NA	NA	NA	NA	NA	NA	Sweet	NA	NA
Toluene	100	100	NA	0.9	9.5	2,000	Sweet	2.1	8.82
Trichloroethylene	100	50	NA	8	12.5	1,000	Chloroform	1.36	9.45
1,2,4-Trimethylbenzene	NA	25	NA	0.9	6.4	NA	Distinct	2.4	NA
1,3,5-Trimethylbenzene	NA	25	NA	NA	NA	NA	Distinct	2.4	NA
Vinyl Chloride	1	1	NA	NA	NA	NA	NA	NA	NA
Xylenes (o,m,p)	100	100	NA	1	7	1,000	Sweet	1.1	8.56
Metals									
Arsenic	0.01	0.2	NA	NA	NA	100, Ca	Almond	NA	NA
Cadmium	0.2	0.5	NA	NA	NA	NA	NA	NA	NA
Chromium	1	0.5	NA	NA	NA	NA	NA	NA	NA
Lead	0.05	0.15	NA	NA	NA	700	NA	NA	NA
Mercury	0.05	0.05	NA	NA	NA	28	Odorless	NA	NA
Selenium	0.2	0.02	NA	NA	NA	Unknown	NA	NA	NA
Other									
Asbestos	0.1 (f/cc)	NA	1.0 (f/cc)	NA	NA	NA	NA	NA	NA

(a) Skin = Skin Absorption
(b) OSHA-PEL Permissible Exposure Limit (flame weighted average, 8-hour): NIOSH Guide, June 1990
(c) ACGIH – 8 hour time weighted average from Threshold Limit Values and Biological Exposure Indices for 2003.
(d) Metal compounds in mg/m3
(e) Lower Exposure Limit (%)
(f) Upper Exposure Limit (%)
(g) Immediately Dangerous to Life or Health Level: NIOSH Guide, June 1990.

Notes:
1. All values are given in parts per million (PPM) unless otherwise indicated
2. Ca = Possible Human Carcinogen, no IDLH information

APPENDIX 1A

New York State Department of Health
Generic Community Air Monitoring Plan

A Community Air Monitoring Plan (CAMP) requires real-time monitoring for volatile organic compounds (VOCs) and particulates (i.e., dust) at the downwind perimeter of each designated work area when certain activities are in progress at contaminated sites. The CAMP is not intended for use in establishing action levels for worker respiratory protection. Rather, its intent is to provide a measure of protection for the downwind community (i.e., off-site receptors including residences and businesses and on-site workers not directly involved with the subject work activities) from potential airborne contaminant releases as a direct result of investigative and remedial work activities. The action levels specified herein require increased monitoring, corrective actions to abate emissions, and/or work shutdown. Additionally, the CAMP helps to confirm that work activities did not spread contamination off-site through the air.

The generic CAMP presented below will be sufficient to cover many, if not most, sites. Specific requirements should be reviewed for each situation in consultation with NYSDOH to ensure proper applicability. In some cases, a separate site-specific CAMP or supplement may be required. Depending upon the nature of contamination, chemical- specific monitoring with appropriately-sensitive methods may be required. Depending upon the proximity of potentially exposed individuals, more stringent monitoring or response levels than those presented below may be required. Special requirements will be necessary for work within 20 feet of potentially exposed individuals or structures and for indoor work with co-located residences or facilities. These requirements should be determined in consultation with NYSDOH.

Reliance on the CAMP should not preclude simple, common-sense measures to keep VOCs, dust, and odors at a minimum around the work areas.

Community Air Monitoring Plan

Depending upon the nature of known or potential contaminants at each site, real-time air monitoring for volatile organic compounds (VOCs) and/or particulate levels at the perimeter of the exclusion zone or work area will be necessary. Most sites will involve VOC and particulate monitoring; sites known to be contaminated with heavy metals alone may only require particulate monitoring. If radiological contamination is a concern, additional monitoring requirements may be necessary per consultation with appropriate NYSDEC/NYSDOH staff.

Continuous monitoring will be required for all ground intrusive activities and during the demolition of contaminated or potentially contaminated structures. Ground intrusive activities include, but are not limited to, soil/waste excavation and handling, test pitting or trenching, and the installation of soil borings or monitoring wells.

Periodic monitoring for VOCs will be required during non-intrusive activities such as the collection of soil and sediment samples or the collection of groundwater samples from existing monitoring wells. "Periodic" monitoring during sample collection might reasonably consist of taking a reading upon arrival at a sample location, monitoring while opening a well cap or overturning soil, monitoring during well baling/purging, and taking a reading prior to leaving a sample location. In some instances, depending upon the proximity of potentially exposed individuals, continuous monitoring may be required during sampling activities. Examples of such situations include groundwater sampling at wells on the curb of a busy urban street, in the midst of a public park, or adjacent to a school or residence.

VOC Monitoring, Response Levels, and Actions

Volatile organic compounds (VOCs) must be monitored at the downwind perimeter of the immediate work area (i.e., the exclusion zone) on a continuous basis or as otherwise specified. Upwind concentrations should be measured at the start of each workday and periodically thereafter to establish background conditions. The monitoring work should be performed using equipment appropriate to measure the types of contaminants known or suspected to be present. The equipment should be calibrated at least daily for the contaminant(s) of concern or for an appropriate surrogate. The equipment should be capable of calculating 15-minute running average concentrations, which will be compared to the levels specified below.

- If the ambient air concentration of total organic vapors at the downwind perimeter of the work area or exclusion zone exceeds 5 parts per million (ppm) above background for the 15-minute average, work activities must be temporarily halted and monitoring continued. If the total organic vapor level readily decreases (per instantaneous readings) below 5 ppm over background, work activities can resume with continued monitoring.

- If total organic vapor levels at the downwind perimeter of the work area or exclusion zone persist at levels in excess of 5 ppm over background but less than 25 ppm, work activities must be halted, the source of vapors identified, corrective actions taken to abate emissions, and monitoring continued. After these steps, work activities can resume provided that the total organic vapor level 200 feet downwind of the exclusion zone or half the distance to the nearest potential receptor or residential/commercial structure, whichever is less - but in no case less than 20 feet, is below 5 ppm over background for the 15-minute average.

- If the organic vapor level is above 25 ppm at the perimeter of the work area, activities must be shutdown.

All 15-minute readings must be recorded and be available for State (DEC and DOH) personnel to review. Instantaneous readings, if any, used for decision purposes should also be recorded.

Particulate Monitoring, Response Levels, and Actions

Particulate concentrations should be monitored continuously at the upwind and downwind perimeters of the exclusion zone at temporary particulate monitoring stations. The particulate monitoring should be performed using real-time monitoring equipment capable of measuring particulate matter less than 10 micrometers in size (PM-10) and capable of integrating over a period of 15 minutes (or less) for comparison to the airborne particulate action level. The equipment must be equipped with an audible alarm to indicate exceedance of the action level. In addition, fugitive dust migration should be visually assessed during all work activities.

- If the downwind PM-10 particulate level is 100 micrograms per cubic meter (mcg/m^3) greater than background (upwind perimeter) for the 15-minute period or if airborne dust is observed leaving the work area, then dust suppression techniques must be employed. Work may continue with dust suppression techniques provided that downwind PM-10 particulate levels do not exceed 150 mcg/m^3 above the upwind level and provided that no visible dust is migrating from the work area.

- If, after implementation of dust suppression techniques, downwind PM-10 particulate levels are greater than 150 mcg/m^3 above the upwind level, work must be stopped and a re-evaluation of activities initiated. Work can resume provided that dust suppression measures and other controls are successful in reducing the downwind PM-10 particulate concentration to within 150 mcg/m^3 of the upwind level and in preventing visible dust migration.

All readings must be recorded and be available for State (DEC and DOH) personnel to review.

APPENDIX 5

OPERATIONS AND MAINTENANCE MANUAL

LABELLA Associates, D.P.C.
Engineering
Architecture
Environmental
Planning

Operation & Maintenance Plan
NYSDEC Brownfield Cleanup Site #C828159

Location:

690 Saint Paul Street
Rochester, New York 14605

Prepared for:

Genesee Valley Real Estate Company, LLC
160 Despatch Drive
East Rochester, New York 14445

LaBella Project No. 209280

October 25, 2017

Table of Contents

1.0 INTRODUCTION 1
1.1 Systems Overview 1
1.2 Plan Organization 2
2.0 SYSTEM DESCRIPTIONS 2
2.1 Groundwater Pump and Treatment System (GPTS) Description 2
2.2 Sub Slab Depressurization System (SSDS) 3
2.3 LNAPL Recovery System 3
2.4 Soil Cover System and Cap 4
2.5 Well Network 4
3.0 PREVENTIVE MAINTENANCE 4
3.1 GPTS Maintenance 4
3.1.1 Well Pumps 4
3.1.2 Transfer Pumps 5
3.1.3 Air Compressor 5
3.1.4 Carbon Vessels 5
3.1.5 Equalization Tank, Flowmeter, Valves, Etc. 5
3.1.6 GPTS Room Vent Fan 5
3.2 SSDS Preventive Maintenance 5
3.3 LNAPL Recovery System Preventive Maintenance 6
3.4 Soil Cover System and Cap Preventive Maintenance 6
3.4.1 Vegetated Soil Cover 6
3.4.2 Pavement and Concrete Soil Cover 6
3.5 AOC #1 and AOC #8 Injection System Infrastructure Preventive Maintenance 6
3.6 Well Network Preventive Maintenance 6
4.0 OPERATIONAL MONITORING 6
4.1 GPTS Operational Monitoring 6
4.2 SSDS Monitoring 7
4.3 LNAPL Recovery System Monitoring 8
4.4 Soil Cover (or Cap) Monitoring 8
4.5 AOC #1 and AOC #8 Injection Infrastructure 9
4.6 Well Network 9

TABLE OF CONTENTS

Continued

FIGURES

Figure 1 Site Location Map
Figure 2A GPTS Extraction Well Locations
Figure 2B GPTS Diagram
Figure 3 Building 14B SSDS Layout
Figure 4 LNAPL Well Locations
Figure 5 Soil Cover System
Figure 6 AOC #1 and #8 Injection Infrastructure
Figure 7 Groundwater Monitoring Well Network

APPENDICES (Included on CD)

Appendix A GPTS Manufacturer Specifications and Monitoring Form
Appendix B SSDS Manufacturer Specifications and Monitoring Form
Appendix C LNAPL Manufacturer Specifications and Monitoring Form
Appendix D Soil Cover System Monitoring Form
Appendix E Well Network Monitoring Form

1.0 INTRODUCTION

This Operation and Maintenance (O&M) Plan is designed to assist the system operators in operating, maintaining and monitoring the 1) Sub-Slab Depressurization System (SSDS) for Building 14B, 2) Groundwater Pump and Treatment System (GPTS), 3) AOC #1 and #8 injection infrastructure, 4) soil cover system, 5) Light Non-Aqueous Phase Liquid (LNAPL) recovery system for AOC #6, and the 6) Groundwater Monitoring Well Network. These systems are at the property located at 690 St. Paul Street, City of Rochester, Monroe County, New York (see Figure 1). This plan was developed in accordance with the requirements of the Site Management Plan (SMP) that is currently in the New York State (NYS) Brownfield Cleanup Program (BCP) Site No. C828159 which is administered by the New York State Department of Environmental Conservation (NYSDEC).

1.1 Systems Overview

The four (4) remedial systems at the Site were constructed and operated to address groundwater contamination of chlorinated solvents in the shallow bedrock (i.e. GPTS), free-phase petroleum related compounds identified in the overburden and shallow bedrock groundwater (i.e. LNAPL recovery system), prevent direct contact with residual contaminated soil (i.e. soil cover system), and soil vapors containing chemicals of concern in the on-Site buildings (i.e. SSDS). Each remedial system is summarized below:

- **GPTS** – The GPTS consists of 3 recovery wells and a vent system. Each well contains a groundwater extraction pump. The groundwater pumps to the wastewater treatment system consisting of an equalization tank, then through activated carbon drums, and lastly discharged into the local municipal sewer system. The vent system in the GPTS room is intended to exhaust the off-gassing of chemicals of concern to the roof.
- **SSDS** – The SSDS depressurizes the sub-slab in Buildings 14B, thus mitigating potential soil vapor intrusion issues within portions of these buildings. In addition to the continual operation of the SSDS, monitoring of the effectiveness of the SSDS includes periodic checks of pressure field extension (PFE) monitoring points as well as the collection of ambient air samples within buildings 14B, 16, and 22.
- **LNAPL Recovery System** – The LNAPL recovery system consists of monitoring a network of 8 groundwater monitoring wells for the presence of LNAPL. The presence of LNAPL is monitored with a bailer and oil-water interface meter, combined with the installation of absorbent well sock (*PIG® Monitoring Well Skimming Sock*, or similar) as needed to recover any identified LNAPL present in the wells.
- **Soil Cover System and Cap –** The soil cover system and cap is monitored annually at the Site, and is designed to prevent direct contact exposure to contaminated soil. The soil cover system consists of vegetated areas as well as permanent paved areas.
- **AOC #1 and #8 Injection Infrastructure –** The injection infrastructure consists of five injections points/trenches for AOC #8 and two injections points/trenches for AOC #1 (see Figure 6).
- **Well Network** – There are 13 bedrock, 14 overburden, 12 injection (AOC #1 only), and 3 extraction wells at the Site as part of the site monitoring activities (see Figure 7).

1.2 Plan Organization

The O&M Plan is divided into four sections:

- **Section 2** provides a general description of each remedial system;
- **Section 3** includes recommended preventative maintenance and checks; and
- **Section 4** includes a summary of operational monitoring of each remedial system.

Appendices for this O&M Plan are attached to this document and include the manufacture's equipment manuals for the remedial systems, as applicable.

2.0 SYSTEM DESCRIPTIONS

The descriptions of each remedial system is described below.

2.1 Groundwater Pump and Treatment System (GPTS) Description

The groundwater recovery well locations are shown of Figure 2A and consist of extraction wells EW-1, EW-2, and EW-3. Each well is equipped with a submersible pump near the bottom of the well to extract groundwater. Construction details for the recovery wells are provided in Appendix A. Each pump is connected to ¾ inch rubber air-line that supplies air from a compressor to activate the pump and a ¾ inch rubber hose that transfers the groundwater to the equalization tank. From the equalization tank the groundwater is pumped through two activated carbon vessels and discharged in the Monroe County Pure Water (MCPW) sewer system. The GPTS is shown on Figure 2B.

The groundwater extractions pumps are Geotech 4" Auto-Reclaimer (AR4) which is an automatic and controlerless, positive air displacement pump that requires a standard compressed air source to operate. Each pump can extract up to 6 gallons per minute (GPM) and can operate between 1-110 psi. The pumps can be removed from the well and disassembled by removing the bottom cap and housing as described in the pump operation manual included in Appendix A.

The transfer pump consists of a ¾ hp pump capable of pumping up to 20 gallons per minute (gpm). Manufacturer specifications for the transfer pump are included in Appendix A.

Two carbon vessels are utilized to filter fines from the water and treat volatile organic compounds (VOCs) prior to discharge. Each vessel consists of an Aqua 500 HP from Carbon Service and Equipment Company (or equivalent). Each vessel contains 500-lbs of carbon and is constructed of corrosion resistant polyethylene lined fiberglass reinforced composite. Manufacturer specifications for the carbon vessels are included in Appendix A.

The treated water is discharged to an existing sanitary sewer discharge point located approximately 90 feet from the GPTS components.

A vent system has been installed in the GPTS room to prevent potential future off gassing of chemicals of concern into the occupied building space. The fan installed will perform approximately four air changes per hour of the GPTS room and is vented to the rook.

2.2 Sub Slab Depressurization System (SSDS)

The SSDS was installed in substantial accordance with the NYSDOH *Guidance for Evaluating Soil Vapor Intrusion in the State of New York* dated October 2006 (and associated amendments). The majority of the system was constructed of Schedule 40 polyvinyl chloride (PVC) piping and fittings.

The SSDS was designed to provide negative pressure beneath the sub slab of Building 14B that effectively minimizes the potential for vapor intrusion for VOCs from sub slab soils to indoor air. The locations of the system features are depicted on Figure 3.

Building 14B system originally consisted of two separate systems (East and West). The effectiveness of these systems was monitored via PFE monitoring points. Subsequent to the installation of the East and West systems, PFE points MP-5 and MP-6 (located in the southwest corner of Building 14B and in proximity to a void space under the southwest stairwell) had shown positive pressure in 2010 and 2011. A pilot test conducted in September 2011 demonstrated that connecting a system to vent this void space would produce negative pressure readings in MP-5 and MP-6 and thus, influence sub-slab pressure. However, monitoring points MP-7 and MP-8 (located just north of MP-5 and MP-6; refer to Figure 3) only indicated marginal influence and thus it was discussed that a separate vent system would be necessary in this area to enhance vacuum in the area of MP-7 and MP-8.

To further enhance the influence of the SSDS in the southwest portion of the building, the installation of the additional vent systems was initiated on February 20, 2012 and was completed on April 18, 2012. Pressure readings collected from monitoring points MP-5 and MP-6 from the time the additional vent system came online until June 2012 indicated a gradual change from equilibrium (i.e., 0.000 inches of water column ("WC)) to negative values.

2.3 LNAPL Recovery System

The LNAPL recovery system consists of semi-annual monitoring a network of eight (8) groundwater monitoring wells (i.e. BW-1, RW-East, RW-West, REC-B-East, REC-B-West, BW-14, BW-15, and BW-16) for the presence of LNAPL that are shown on Figure 4. The presence of LNAPL is monitored with a bailer and oil-water interface meter, combined with the installation of absorbent well sock (*PIG® Monitoring Well Skimming Sock*, or similar) as needed to recover any identified LNAPL present in the wells. The sock installation manual and specification is included in Appendix C.

including

If ~~a measurable amount of~~ LNAPL is present in the bailer (i.e., ~~more than~~ a sheen), an absorbent monitoring well sock (*PIG® Monitoring Well Skimming Sock*, or similar) will be lowered into the well and placed so the oil-water interface is near the middle of the sock to account for fluctuations in the water table. Each *PIG® Monitoring Well Skimming Sock* is 1.5-inches in diameter, 18-inches in length and is capable of absorbing 0.13 gallons of product (equivalent to approximately 2.5-inches of product in a 4-inch diameter well).

The absorbent sock(s) it to be removed one (1) month prior to the next scheduled monitoring event and visual observations will be recorded. If ~~measureable~~ LNAPL is still present in the well, a new absorbent sock will be placed in the well. Impacted absorbent socks will be placed in plastic garbage bags (or similar) and placed in a secure, clearly labeled, 55-gallon drum in the northern (unoccupied portion) of Building 22. This drum will be properly disposed of off-site and replaced with a new drum on an as-needed basis.

2.4 Soil Cover System and Cap

The soil cover system consists of a vegetative layer and asphalt paved layer over contaminated soil areas. The cover system is to remain intact to prevent direct contact with the contaminated soil. Vegetative cover areas consist of a 2 foot (ft) thick layer of clean soil over contaminated soil as shown in the area on Figure 6. These cover systems and cap will be monitored for overall conditions to determine of weathering and deterioration has occurred that would require maintenance.

2.5 Well Network

The groundwater monitoring well network consists 13 bedrock, 14 overburden, 12 injection (AOC #1 only), and 3 extraction wells overburden wells. The locations of the wells are shown on Figure 7 and well logs are included in the Site Management Plan appendices.

3.0 PREVENTIVE MAINTENANCE

It is important that the systems be checked frequently so that any operating problems can be identified and corrected in a timely manner. Operational monitoring, discussed in Section 4.0 should also be performed as part of this inspection, when necessary.

3.1 GPTS Maintenance

3.1.1 Well Pumps

When in operation, the groundwater recovery pumps should be monitored annually to verify they are pumping at a normal rate. The pumping rate can be adjusted by adjusting the air flow from the compressor to the pump. If the pumping rate decreases significantly, the groundwater and levels in the wells should be measured to determine if the lower pumping rate is due to a decrease in the water elevation or a result of pump, discharge piping or well problems. Additional inspection may be warranted including removal and inspection of the pump system. Damaged or corroded pipe, clamps, fittings, and valves should be replaced, and worn pumps should be rebuilt or replaced as necessary.

If the specific capacity of a recovery well is decreasing over time, it may be an indication of accumulation of sediments. To remove sediment, a bailer may be used to surge the water in the well. The bailer should be lowered into the well until it fills with water and sediment, then pulled and emptied into a container. This action should be repeated until sediments have appeared to decrease in the purge water. All purge water shall be emptied into the equalization tank for treatment and disposal.

3.1.2 Transfer Pumps

The transfer pump will be inspected on a monthly basis to ensure it is functioning properly. Specifically, the pump will be examined to ensure that there are no leaks, objects are not blocking flow and unexpected noises and/or odors are not being emitted. In the event that the pump is not functioning properly, system operation will be suspended while the pump is repaired or replaced.

Ball bearings are located in and are part of the motor. The ball bearings are permanently lubricated and as such, greasing and other maintenance is not required. Additional information associated with the transfer pump is included in Appendix A.

3.1.3 Air Compressor

The air compressor will be inspected on a monthly basis to ensure it is functioning properly. Specifically, the compressor will be examined to ensure that there are no leaks, objects are not blocking air flow and unexpected noises and/or odors are not being emitted. In the event that the compressor is not functioning properly, system operation will be suspended while the compressor is repaired or replaced. The low oil level monitor will also be checked during the monthly inspection and oil should be replaced quarterly or as needed, whichever is sooner. Additional information associated with the compressor maintenance is included in Appendix A.

3.1.4 Carbon Vessels

The carbon vessels will be inspected on a monthly basis to check for any leaks or other indications of malfunctions. The pressure gauges should be checked at this time and the pressure recorded. The pressure will not exceed 150 pounds per square inch gauge (psig). The vessels will be replaced on an as-needed basis based on VOC sample analysis and/or elevated pressures.

3.1.5 Equalization Tank, Flowmeter, Valves, Etc.

The equalization tank, flowmeter, valves, sampling ports, visible piping, etc. will be inspected on a monthly basis to assess for leaks, blockages and other potential problems. Valves will be tested at this time to ensure they open and close properly and easily. If any problems are observed with any of these components, system operation will be suspended and the part(s) in question should be repaired or replaced.

3.1.6 GPTS Room Vent Fan

The vent fan will be inspected on a monthly basis. The fan will be repaired or replaced as needed.

3.2 SSDS Preventive Maintenance

Preventive maintenance of the SSDS will include system checks to ensure the system is operating to the design requirements, and ~~may~~ will include the following:

- Inspection of the area of concern, including all visible components of the venting systems;
- Monitoring of designated PFE monitoring points to ensure there are no potentially significant changes in subsurface gas concentrations or pressure,
- Inspection of the blower/fan system and alarms to ensure all component parts are functioning;

- Monitoring of vent risers for flow rates to confirm that the venting systems are functioning as intended; and
- Other appropriate requirements such as routine maintenance, testing of functioning components of the venting systems in accordance with the manufacturers' schedule and recommendations, if appropriate.

3.3 LNAPL Recovery System Preventive Maintenance

Preventive maintenance of the LNAPL recovery system includes storing the absorbent socks in a dry place away from UV rays to limit wear of absorbent sock. Once the absorbent sock is installed no maintenance, only monitoring will be required.

3.4 Soil Cover System and Cap Preventive Maintenance

3.4.1 Vegetated Soil Cover

Vegetated soil covers should maintain a grass layer, with no bare spots or erosion. Top layers of gravel or landscaped cover materials should be maintained to minimize vegetation growth and deterioration by promptly replacing the material when those problems are noted.

3.4.2 Pavement and Concrete Soil Cover

Maintain pavement and concrete to repair cracks and deterioration promptly. Repairs can include an appropriate sealant, and, if necessary replacement of portions of the pavement or concrete.

3.5 AOC #1 and AOC #8 Injection System Infrastructure Preventive Maintenance

Wells will be accessed as needed to evaluate depth to bottom and assess if injection infrastructure is silting . If silting occurs they will be developed using a high volume pump of bailer to remove silt as needed. Waste materials will be disposed of in accordance with applicable regulations. Depth of total wells will be collected and compared to initial measurements.

3.6 Well Network Preventive Maintenance

Repairs and preventive maintenance will be performed as needed. An inspection form is included in Appendix E.

4.0 OPERATIONAL MONITORING

Operational monitoring allows for measuring the performance of the remedial system and identifies potential problems is the system operation.

4.1 GPTS Operational Monitoring

Monitoring of the GPTS is summarized in Table 4.1A below:

Table 4.1A GPTS Monitoring

Component	Inspection Frequency	Maintenance Frequency	Additional Information
Well Pumps (Geotech 4.0 Auto-Reclaimer)	Annually	Annually and as needed	See Appendix A for Manual
Transfer Pump (Everbilt Model ¾ HP Submersible Pump)	Monthly	As needed	See Appendix A for Manual
Air Compressor (DeWalt Model DXCMV7518075)	Monthly	Quarterly	See Appendix A for Manual
Carbon Vessels (Aqua 500 HP*)	Monthly	As needed	None
Equalization Tank, Valves, etc.	Monthly	As needed	None
Extraction and Treatment Wells	Annually	As needed	See Appendix A for Specification
GPTS Room Vent Fan	Monthly	As needed	See Appendix A for Specification

In addition to the monitoring of the mechanical components, samples of the groundwater effluent will be conducted to monitor VOC concentrations and groundwater and to adhere to the MCPW sewer use permit requirements. Sampling frequency is outlined in Table 4.1B.

TABLE 4.1B SAMPLING FREQUENCY

Sampling Location	Start-up Sampling Frequency for First 3-month of System Operation	Routine Sampling Frequency after First 3-month of System Operation	Analytical Parameters
Between transfer pump and first carbon vessel	Monthly	Quarterly	VOCs (USEPA Method 624)
Between Carbon Vessels	Monthly	Quarterly	VOCs (USEPA Method 624)
After carbon vessels	Monthly	Monthly*	VOCs (USEPA Method 624)

USEPA – United States Environmental Protection Agency
*When in operation- this is a Monroe County Pure Water discharge permit requirement.

4.2 SSDS Monitoring

The monitoring of the SSDS will include the following:

Table 4.2 – SSDS Monitoring

Remedial System Component	Monitoring Parameter	Operating Range	Monitoring Schedule
Building 14B			
Fans	Pressure	Operation	Monthly or as-needed
Fan Gauge/ Manometer	Should be within typical operating range	-0 to 50 inches of water columns for Gauges/Fans 1 and 2 -0 to 0.25 inches of water columns for Gauges/Fans 3 and 4	Monthly or as-needed
Fans	Pressure at PFE points	0.004 inches of water column/negative pressure	Annually or as-needed
Alarms and piping	Operational/condition	Minimum 0.25 inches of water columns for Fans 1, 2 and 3. Fan 4 is audible alarm that triggers when there is a loss of power to Fan 4.	Annually or as-needed
Indoor Air Sampling	Collect indoor air samples per Soil Management Plan	NYSDOH guidance values	Quarterly or Annually per Site Management Plan

NYSDOH – New York State Department of Health

The annual site inspection checklist form the SSDS is included in Appendix B.

4.3 LNAPL Recovery System Monitoring

Monitoring for LNAPL will be conducted semi-annually at from a network of eight (8) groundwater monitoring wells (i.e. BW-1, RW-East, RW-West, REC-B-East, REC-B-West, BW-14, BW-15, and BW-16). The semi-annual site inspection for is included in Appendix C.

4.4 Soil Cover (or Cap) Monitoring

All cover systems should be inspected at least annually in the spring. Photographs and notes of the condition, and whether preventative maintenance is required of the soil cover system shall be recorded in the annual site inspection form included in Appendix D. The monitoring should include the following:

TABLE 4.4 Soil Cover (or Cap) Monitoring

Remedial System Component	Monitoring Parameter	Operating Range	Monitoring Schedule
* AOC #6D Soil Cap	Condition of Cover	NA	Annually
Building slab	Condition of Cover	NA	Annually
Concrete Surface	Condition of Cover	NA	Annually
Asphalt Surface	Condition of Cover	NA	Annually
Soil Cover	Condition of Cover	NA	Annually

*Verify a robust grass cover is maintained. Note signs of settling, erosion, or other signs indicating the cover thickness is less than 2 feet.

4.5 AOC #1 and AOC #8 Injection Infrastructure

Not Applicable

4.6 Well Network

Not Applicable

\\PROJECTS1\ProjectsAM\Genesee Valley Real Estate Co\209280 - 690 St Paul Remedial Invest\Reports\O&M Plan\RPT.2017-10-25.ProjNo209280 OM&MP 690 St Paul.docx

LABELLA Associates, D.P.C. | Engineering Architecture Environmental Planning

FIGURES

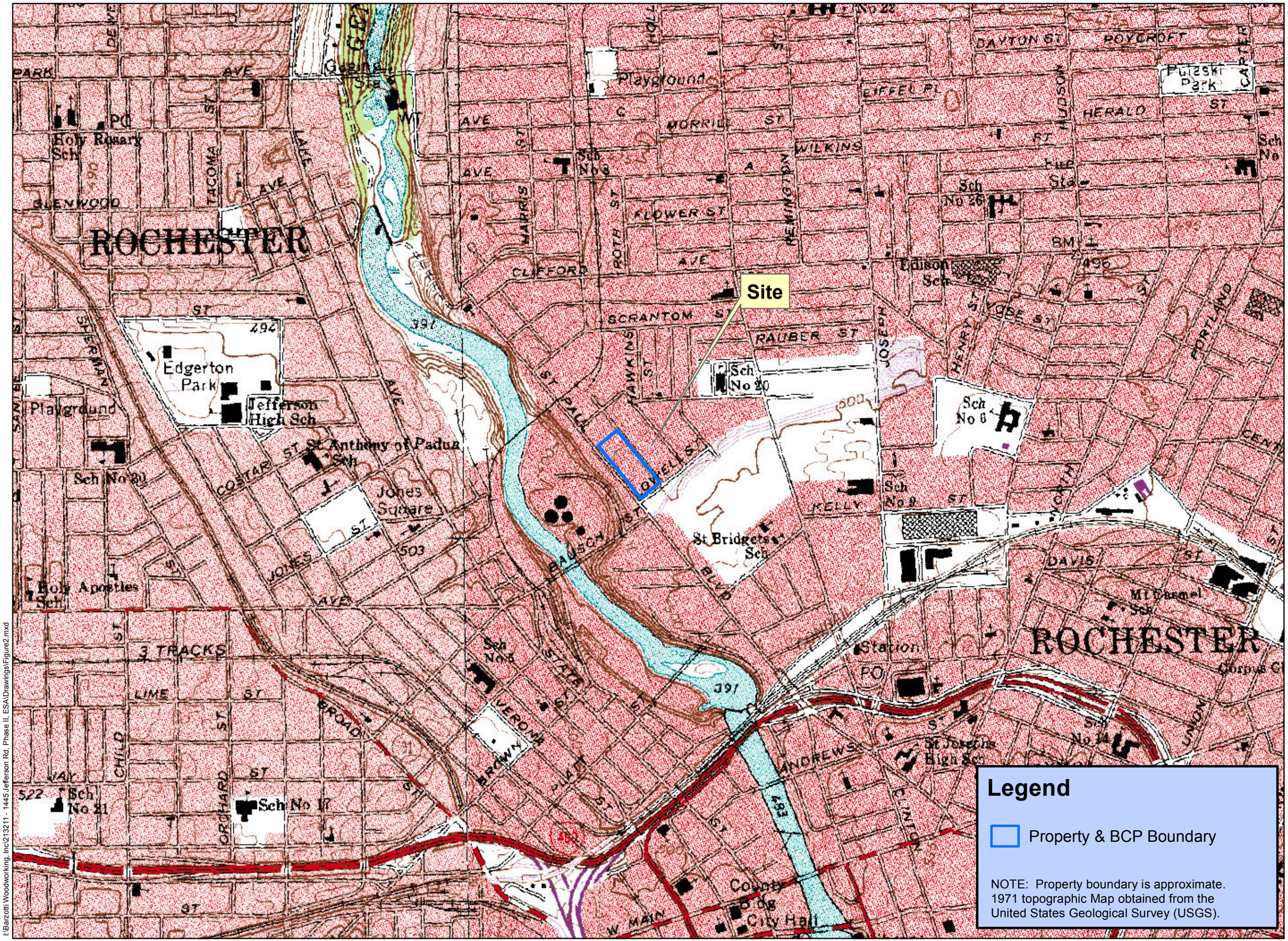

I:\Barzotti Woodworking, Inc\213211 - 1445 Jefferson Rd, Phase II, ESA\Drawings\Figure2.mxd

LABELLA Associates, D.P.C.

300 STATE STREET
ROCHESTER, NY 14614
P: (585) 454-6110
F: (585) 454-3066
www.labellapc.com

COPYRIGHT 2005

SITE LOCATION MAP

O&M PLAN:

BROWNFIELD CLEANUP PROGRAM

690 SAINT PAUL STREET ROCHESTER, NEW YORK

VOLUNTEER: GENESEE VALLEY REAL ESTATE COMPANY

N
W E
S

250 0 1,000

1 inch = 1,000 feet

INTENDED TO PRINT 11" X 17"

DATE; 7/31/2017

209280

FIGURE 1

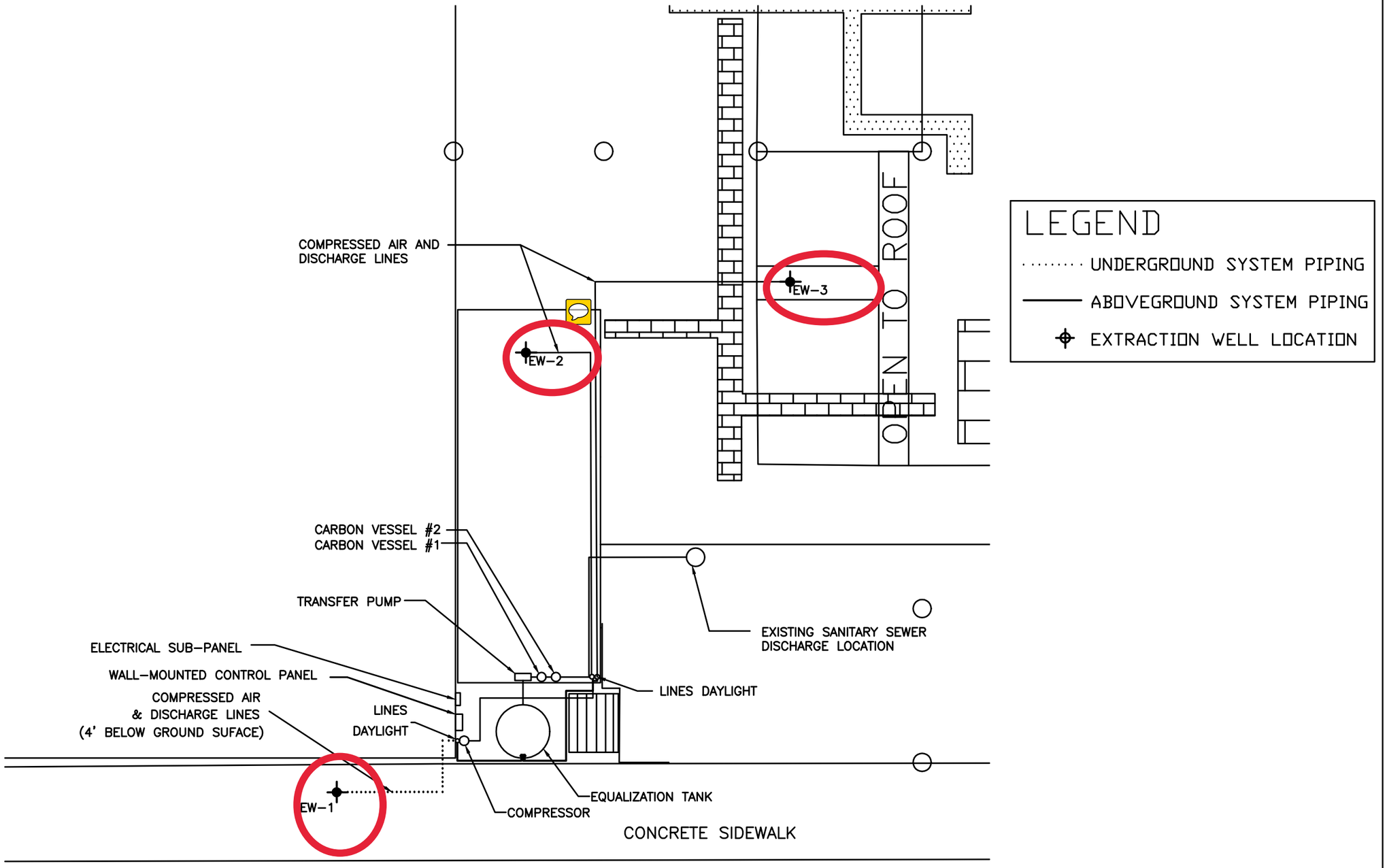

LEGEND

- UNDERGROUND SYSTEM PIPING
- ABOVEGROUND SYSTEM PIPING
- EXTRACTION WELL LOCATION

* NOTES:
1. NOT TO SCALE (DIMENSIONS ONLY AS SHOWN).
2. REFER TO FIGURE 11G FOR ADDITIONAL DETAILS, INCLUDING PIPING DIAMETERS AND MODEL NUMBERS.

It is a violation of New York Education Law Article 145 Sec.7209, for any person, unless acting under the direction of a licensed architect, professional engineer, or land surveyor, to alter an item in any way. If an item bearing the seal of an architect, engineer, or land surveyor is altered; the altering architect, engineer, or land surveyor shall affix to the item their seal and notation "altered by" followed by their signature and date of such alteration, and a specific description of the alteration.

STATE OF NEW YORK
DANIEL P. ROLL
No. 091898
LICENSED PROFESSIONAL ENGINEER

LABELLA Associates, D.P.C.
300 STATE STREET
ROCHESTER, NY 14614
P: (585) 454-6110
F: (585) 454-3066
www.labellapc.com
comsplit © 2003

PROJECT/CLIENT
GENESEE VALLEY REAL ESTATE
690 ST. PAUL STREET
ROCHESTER, NY
FINAL ENGINEERING REPORT
BCP SITE #C828159

DRAWING TITLE
PUMP AND TREAT SYSTEM AS-BUILT

DESIGNED BY: DPN
DRAWN BY: DRP
REVIEWED BY: DPN
ISSUED FOR: FINAL
DATE: SEPTEMBER, 2017

PROJECT/DRAWING NUMBER
209280

FIGURE 2A

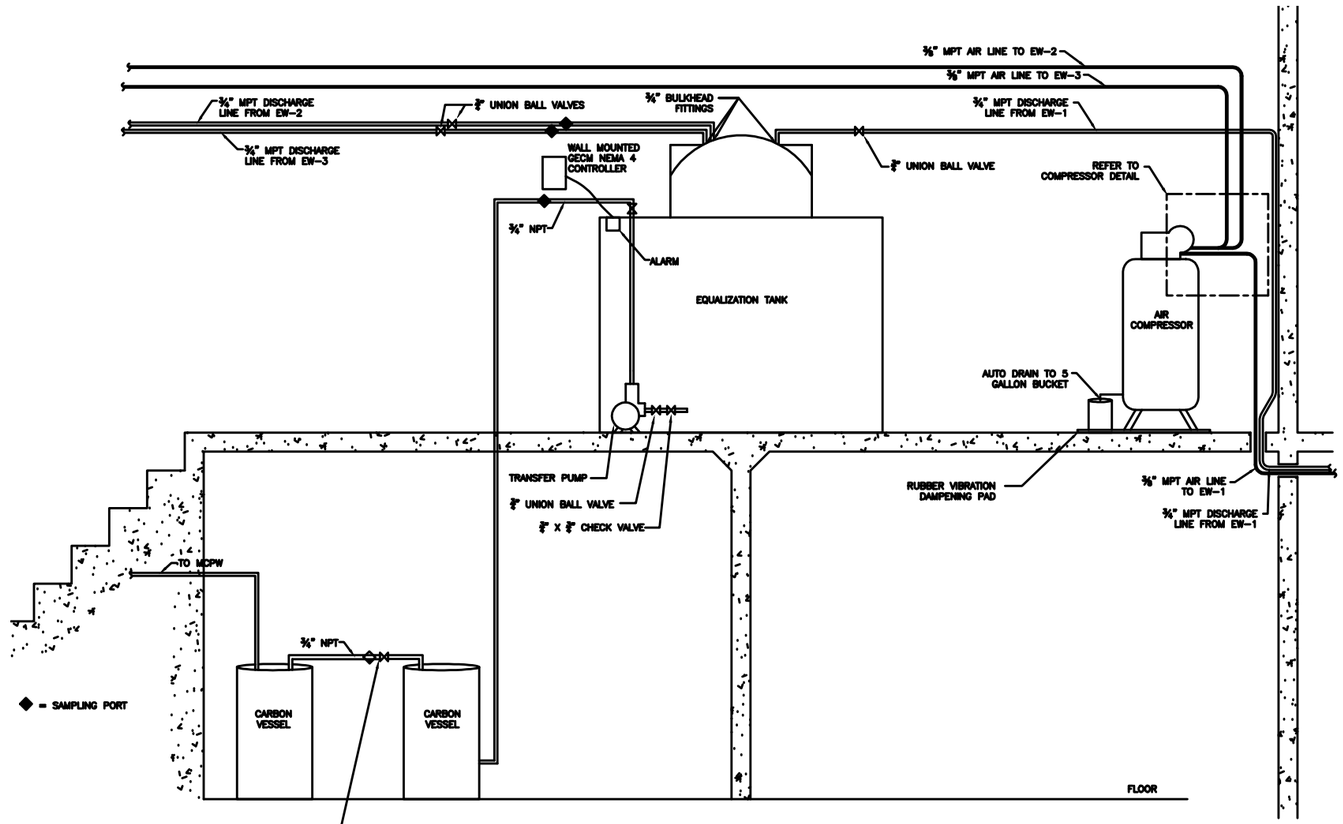

PROCESS FLOW DIAGRAM

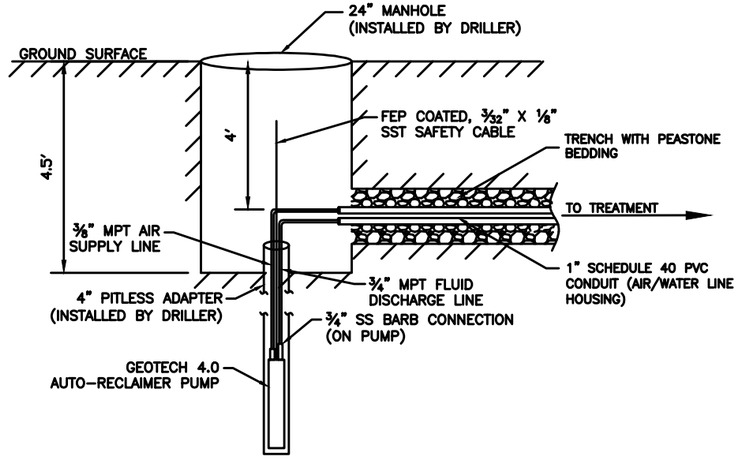

EXTRACTION WELL DETAIL

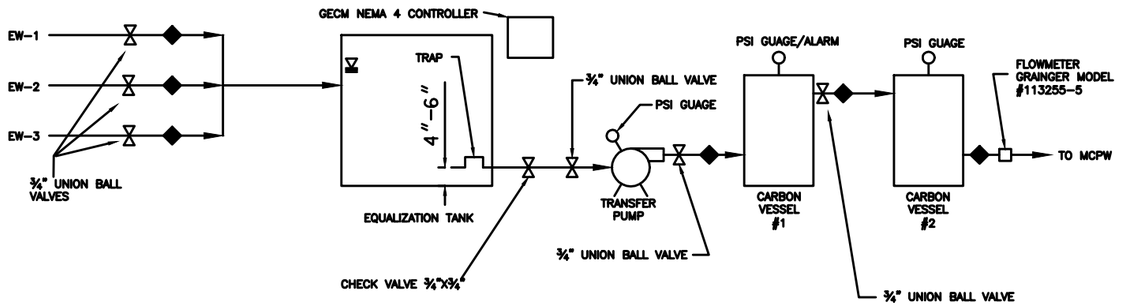

PROCESS FLOW DIAGRAM

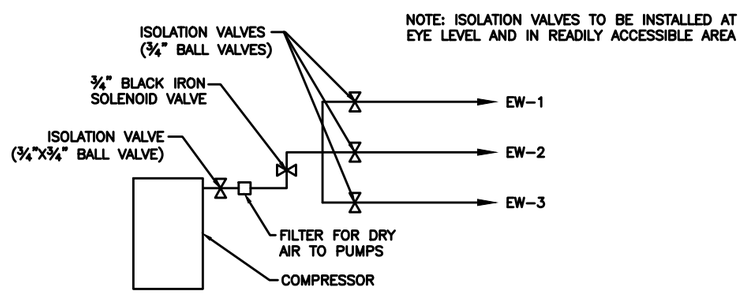

COMPRESSOR DETAIL

* NOTES:
1. NOT TO SCALE (DIMENSIONS ONLY AS SHOWN).
2. REFER TO FIGURE 11F FOR ADDITIONAL DETAILS.

It is a violation of New York Education Law Article 145 Sec.7209, for any person, unless acting under the direction of a licensed architect, professional engineer, or land surveyor, to alter an item in any way. If an item bearing the seal of an architect, engineer, or land surveyor is altered; the altering architect, engineer, or land surveyor shall affix to the item their seal and notation "altered by" followed by their signature and date of such alteration, and a specific description of the alteration.

STATE OF NEW YORK DANIEL P. ROLL No. 091998 LICENSED PROFESSIONAL ENGINEER

LABELLA Associates, D.P.C.
300 STATE STREET
ROCHESTER, NY 14614
P: (585) 454-6110
F: (585) 454-3066
www.labellapc.com
comsprt © 2003

PROJECT/CLIENT
GENESEE VALLEY REAL ESTATE
690 ST. PAUL STREET
ROCHESTER, NY
FINAL ENGINEERING REPORT
BCP SITE #C828159

DRAWING TITLE
PUMP AND TREAT SYSTEM AS-BUILT

DESIGNED BY: DPN
DRAWN BY: CTJ
REVIEWED BY: DPN
ISSUED FOR: FINAL
DATE: SEPTEMBER, 2017

PROJECT/DRAWING NUMBER
209280

FIGURE 2B

It is a violation of New York Education Law Article 145 Sec.7209, for any person, unless acting under the direction of a licensed architect, professional engineer, or land surveyor, to alter an item in any way. If an item bearing the seal of an architect, engineer, or land surveyor is altered; the altering architect, engineer, or land surveyor shall affix to the item their seal and notation "altered by" followed by their signature and date of such alteration, and a specific description of the alteration.

LABELLA Associates, D.P.C.
300 STATE STREET
ROCHESTER, NY 14614
P: (585) 454-6110
F: (585) 454-3066
www.labellapc.com
COPYRIGHT 2003

PROJECT/CLIENT
690 SAINT PAUL STREET
BCP SITE #C828159
690 SAINT PAUL STREET
ROCHESTER, NEW YORK
INTENDED TO PRINT ANSI D

DRAWING TITLE
SITE MANAGEMENT PLAN
BUILDING 14B SUB-SLAB VAPOR
MITIGATION SYSTEM

ISSUED FOR: FINAL
DATE: 8/1/2017
DESIGNED BY: DPN
DRAWN BY: RCN
REVIEWED BY: DPN

PROJECT/DRAWING NUMBER
209280

FIGURE 3

FMR PT 10

BLDG. 14 B

ST. PAUL STREET

VENT SYSTEM #1

VENT SYSTEM #2

VENT SYSTEM #3

VENT SYSTEM #4

GAUGES & ALARMS

2 STACKS (VERTICAL) TO 6TH FLOOR

2 STACKS VERTICAL TO ABOVE ROOFLEINE WITH IN-LINE FANS ON ROOF

3/4" DRAIN LINE BACK TO VOID SPACE

APPROX. LOCATION OF PIPE CHASE

APPROXIMATE LIMITS OF VOID SPACE

SUCTION POINTS ARE LOCATED IN WALL CAVITY AND CONSIST OF SEALING 2" PVC INTO 4" COREHOLE THROUGH THE CONCRETE. SUCTION PIPING PROCEEDs VERTICALLY INTO THE CEILING AND CONNECTS TO 4" PVC LATERAL (REFER TO FIG 2 FOR CROSS SECTION.)

SUCTION POINT: 4" PVC INSERTED HORIZONTALLY INTO WALL AND SEALED INTO VOID SPACE. (REFER TO FIG 3 FOR CROSS SECTION.)

ALL WALL PENETRATIONS IN ACCORDANCE WITH NYS AND CITY OF ROCHESTER BUILDING

128 NE STAIR
129 VESTIBULE
130 ELEMENTARY LOBBY
131A SEC.
131B PRINCIPAL'S OFFICE
131 GENERAL OFFICE
133 GRADE 1 CLASSROOM
134 GRADE 1 CLASSROOM
135 GRADE 2 CLASSROOM
136 GRADE 2 CLASSROOM
127 BUSINESS OFFICE
125 MAIN OFFICE
139 STAFF
NORTH ELEVATOR
126A STORAGE
126 KINDERGARTEN CLASSROOM
124 KINDERGARTEN CLASSROOM
120 GIRLS
132 132A TOILET
118 BOYS
137 CORRIDOR
116 CAFETERIA
108A FOOD STA.
108 SERVERY
SOUTH ELEV.
113A WIRING
113 JANITOR
103 CORRIDOR
101 VESTIBULE
102 JR. & SR.. ACADEMY LOBBY
100 SE STAIR
106 CUST.
105 ELEC. ROOM
107B NURSE'S SUITE
107C OFFICE
107A OFFICE
107D OFFICE
110 STAFF
110A CLO.
112 SPEC. ED. CLASSROOM
109 SW STAIR
138 OFFICE
123 NW STAIR
122 UNDEFINED
121 KINDERGARTEN CLASSROOM
119 GRADE 1 CLASSROOM
117 GRADE 1 CLASSROOM
115 GRADE 2 CLASSROOM
114 GRADE 2 CLASSROOM

1 2 3 4 5 6 7 8 9 11

N

0 2.25 4.5 9 13.5 18
APPROXIMATE SCALE (FEET)

EXISTING SUCTION POINT - 4" CORE HOLE WITH 2" PVC PIPING (LOCATED WITHIN WALL CAVITIES)
EXISTING SSDS PIPING - 3" PVC WITH FLOW DIRECTION
2012 SUCTION POINT - 4" CORE HOLE WITH 2" PVC PIPING
2012 SUCTION POINT - 4" PVC PIPING SEALED INTO WALL
2012 SSDS PIPING - 4" PVC WITH FLOW DIRECTION
SUB-SURFACE PRESSURE MONITORING POINT
1/4" POLYETHYLENE TUBING FROM MANOMETERS TO SYSTEM PIPING CONNECTIONS IN 1ST FLOOR CEILING

NOTES:
(1) FLOOR PLAN BASED ON BERO ASSOCIATES ARCHITECTS FIRST FLOOR PLAN FOR 690 SAINT PAUL STREET, ROCHESTER CHARTER SCHOOL SCIENCE AND TECHNOLOGY, DATED APRIL 11, 2000. ACTUAL LAYOUT MAY VARY FROM THAT SHOWN.
(2) EXISTING SUB-SLAB DEPRESSURIZATION SYSTEM INFRASTRUCTURE INSTALLED BY OWNER WITHOUT OVERSIGHT BY ENGINEER. INFORMATION ON INACCESSIBLE/UNOBSERVALBLE PIPING LOCATIONS SUPPLIED BY OWNER. THE ENGINEER DOES NOT ATTEST TO THE ACCURACY OF THIS INFORMATION.

Path: \\PROJECTS1\ProjectsAM\Genesee Valley Real Estate Co\209280 - 690 St Paul Remedial Invest\Drawings\O&M Plan Drawings\Figure 3 Bldg 14 SSDS.mxd

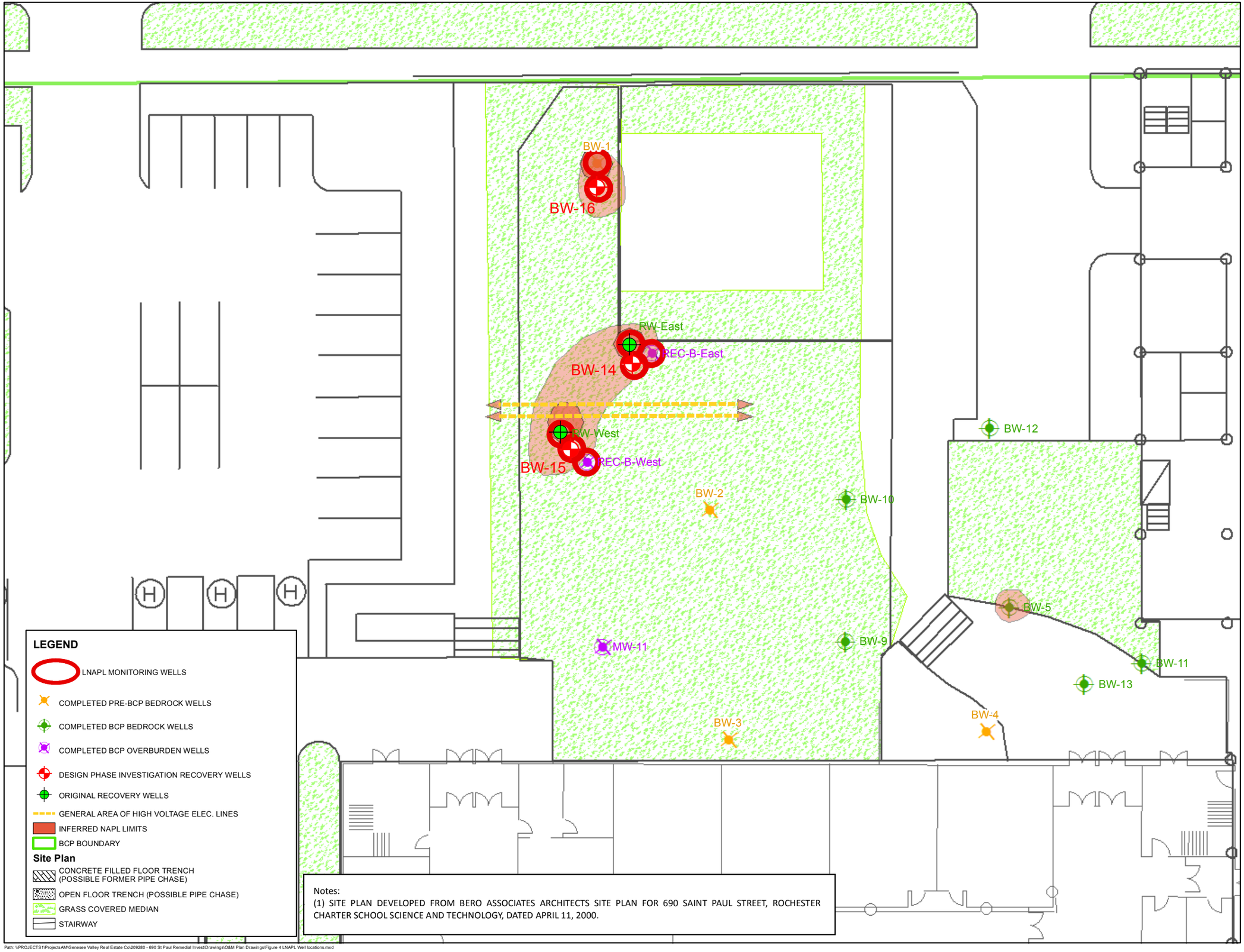

Notes:
(1) SITE PLAN DEVELOPED FROM BERO ASSOCIATES ARCHITECTS SITE PLAN FOR 690 SAINT PAUL STREET, ROCHESTER CHARTER SCHOOL SCIENCE AND TECHNOLOGY, DATED APRIL 11, 2000.

Path: \\PROJECTS1\Projects\AM\Genesee Valley Real Estate Co\209280 - 690 St Paul Remedial Invest\Drawings\O&M Plan Drawings\Figure 4 LNAPL Well locations.mxd

LABELLA Associates, D.P.C.
300 STATE STREET
ROCHESTER, NY 14614
P: (585)454-6110
F: (585)454-3066
www.labellapc.com
COPYRIGHT 2003

ENGINEERING CONTROLS
AOC #6

SITE MANAGEMENT PLAN

BROWNFIELD CLEANUP PROGRAM

690 SAINT PAUL STREET
ROCHESTER, NEW YORK

VOLUNTEER:
GENESEE VALLEY
REAL ESTATE COMPANY

It is a violation of New York Education Law Article 145 Sec.7209, for any person, unless acting under the direction of a licensed architect, professional engineer, or land surveyor, to alter an item in any way. If an item bearing the seal of an architect, engineer, or land surveyor is altered; the altering architect, engineer, or land surveyor shall affix to the item their seal and notation "altered by" followed by their signature and date of such alteration, and a specific description of the alteration.

N E S W

0 5 10 20 Feet
1 inch = 20 feet

Intended to print in 11" x 17" size.

209280

FIGURE 4

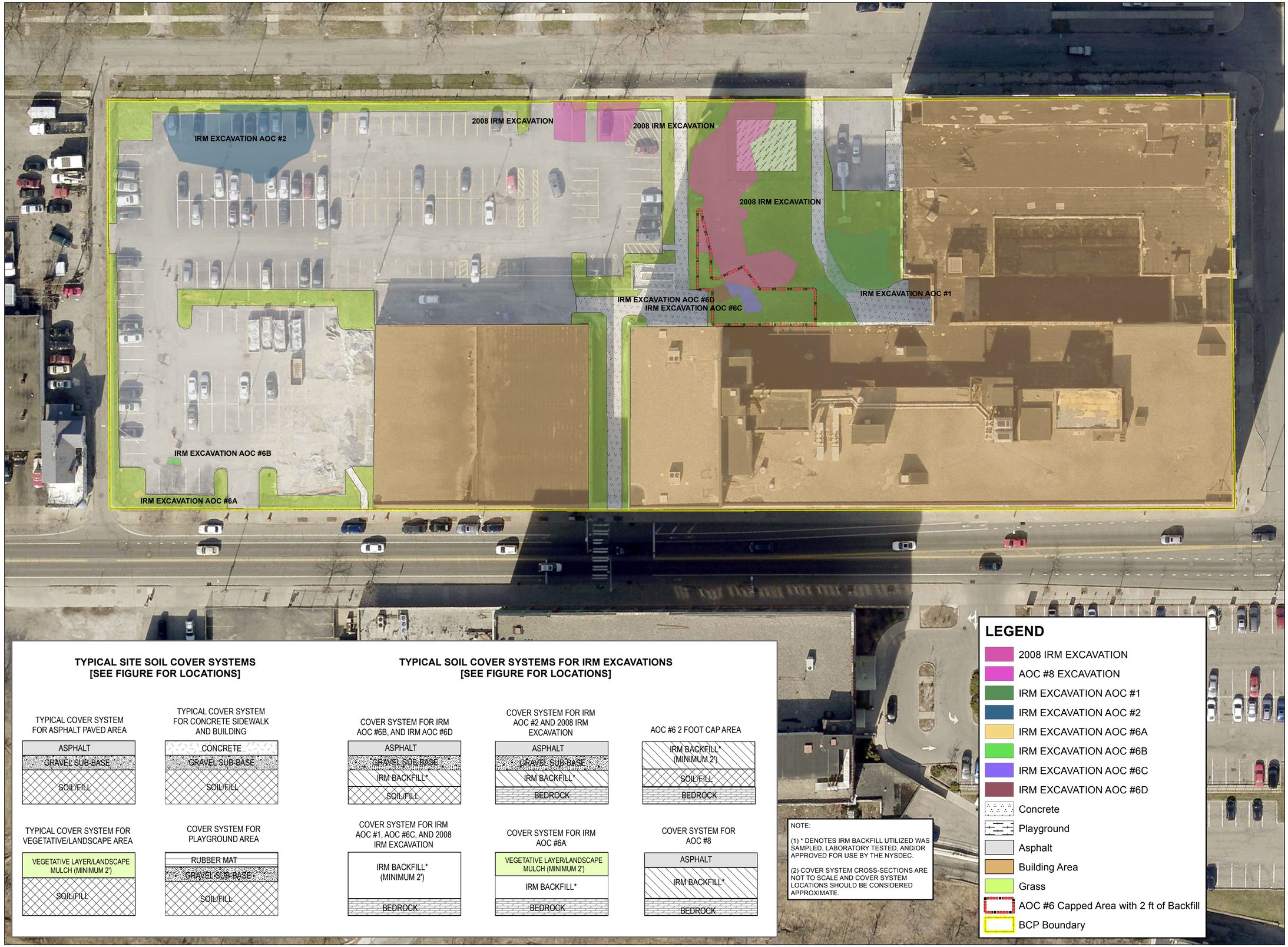

TYPICAL SITE SOIL COVER SYSTEMS [SEE FIGURE FOR LOCATIONS]

TYPICAL COVER SYSTEM FOR ASPHALT PAVED AREA

ASPHALT
GRAVEL SUB-BASE
SOIL/FILL

TYPICAL COVER SYSTEM FOR CONCRETE SIDEWALK AND BUILDING

CONCRETE
GRAVEL SUB-BASE
SOIL/FILL

TYPICAL COVER SYSTEM FOR VEGETATIVE/LANDSCAPE AREA

VEGETATIVE LAYER/LANDSCAPE MULCH (MINIMUM 2')
SOIL/FILL

COVER SYSTEM FOR PLAYGROUND AREA

RUBBER MAT
GRAVEL SUB-BASE
SOIL/FILL

TYPICAL SOIL COVER SYSTEMS FOR IRM EXCAVATIONS [SEE FIGURE FOR LOCATIONS]

COVER SYSTEM FOR IRM AOC #6B, AND IRM AOC #6D

ASPHALT
GRAVEL SUB-BASE
IRM BACKFILL*
SOIL/FILL

COVER SYSTEM FOR IRM AOC #2 AND 2008 IRM EXCAVATION

ASPHALT
GRAVEL SUB-BASE
IRM BACKFILL*
BEDROCK

AOC #6 2 FOOT CAP AREA

IRM BACKFILL* (MINIMUM 2')
SOIL/FILL
BEDROCK

COVER SYSTEM FOR IRM AOC #1, AOC #6C, AND 2008 IRM EXCAVATION

IRM BACKFILL* (MINIMUM 2')
BEDROCK

COVER SYSTEM FOR IRM AOC #6A

VEGETATIVE LAYER/LANDSCAPE MULCH (MINIMUM 2')
IRM BACKFILL*
BEDROCK

COVER SYSTEM FOR AOC #8

ASPHALT
IRM BACKFILL*
BEDROCK

NOTE:

(1) * DENOTES IRM BACKFILL UTILIZED WAS SAMPLED, LABORATORY TESTED, AND/OR APPROVED FOR USE BY THE NYSDEC.

(2) COVER SYSTEM CROSS-SECTIONS ARE NOT TO SCALE AND COVER SYSTEM LOCATIONS SHOULD BE CONSIDERED APPROXIMATE.

LEGEND

- 2008 IRM EXCAVATION
- AOC #8 EXCAVATION
- IRM EXCAVATION AOC #1
- IRM EXCAVATION AOC #2
- IRM EXCAVATION AOC #6A
- IRM EXCAVATION AOC #6B
- IRM EXCAVATION AOC #6C
- IRM EXCAVATION AOC #6D
- Concrete
- Playground
- Asphalt
- Building Area
- Grass
- AOC #6 Capped Area with 2 ft of Backfill
- BCP Boundary

LABELLA Associates, D.P.C.
300 STATE STREET
ROCHESTER, NY 14614
P: (585) 454-6110
F: (585)454-3066
www.labellapc.com
COPYRIGHT 2003

ENGINEERING CONTROLS SOIL COVER SYSTEM

SITE MANAGEMENT PLAN

BROWNFIELD CLEANUP PROGRAM

690 SAINT PAUL STREET ROCHESTER, NEW YORK

VOLUNTEER: GENESEE VALLEY REAL ESTATE COMPANY

STATE OF NEW YORK
DANIEL P. ROLL
No. 091696
LICENSED PROFESSIONAL ENGINEER

It is a violation of New York Education Law Article 145 Sec.7209, for any person, unless acting under the direction of a licensed architect, professional engineer, or land surveyor, to alter an item in any way. If an item bearing the seal of an architect, engineer, or land surveyor is altered; the altering architect, engineer, or land surveyor shall affix to the item their seal and notation "altered by" followed by their signature and date of such alteration, and a specific description of the alteration.

N E W S

0 30 60

1 inch = 30 feet

INTENDED TO BE PRINTED ANSI D

DATE: 10/24/2017

209280

FIGURE 5

Path: \\PROJECTS1\ProjectsAM\Genesee Valley Real Estate Co\209280 - 690 St Paul Remedial Invest\Drawings\O&M Plan Drawings\Figure 5 Soil Cover System.mxd

REFER TO FIGURE 5 FOR SOIL COVER SYSTEM ENGINEERING CONTROL FOR ENTIRE SITE

REFER TO FIGURE 5 FOR LNAPL RECOVERY SYSTEM

MARTIN STREET

CONCRETE SIDEWALK

CURRENT F.A.S.T ASSEMBLY SHOP AREA

BUILDING 16

CONCRETE SIDEWALK

LOWELL STREET

LOADING AREA

CURRENT LOCATION OF 125,000-GALLON RESERVOIR

BUILDING 14A

PAINT BOOTH

TRENCH 1

TRENCH 2

TRENCH 3

TRENCH 4

TRENCH 5

BUILDING 22 STORAGE WAREHOUSE

BUILDING 22 GEVA THEATRE STORAGE

BUILDING 14B

CITY OF ROCHESTER SCHOOL DISTRICT

BUILDING COLUMN (TYP.)

CONCRETE SIDEWALK

ST. PAUL STREET

AOC #8 REMEDIAL TRENCH EXCAVATION AND INJECTION PIPING INSTALLATION

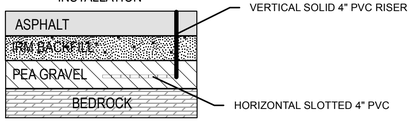

AOC #1 REMEDIAL TRENCH EXCAVATION AND INJECTION PIPING INSTALLATION

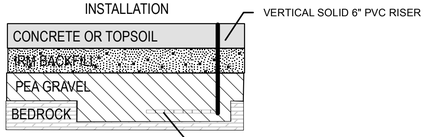

LEGEND

- 6" Riser Pipe - Installed to Grade with Flush Mount
- 4" VERTICAL RISER PIPE - INSTALLED TO GRADE
- 6" Slotted PVC Pipe
- AOC 8 Remedial Trench
- SSDS AOC 1
- Primary Excavation (about 2.0-feet into rock)
- Test Pit (about 2.5-feet into rock)
- Secondary Excavation (about 3.0-feet into rock)
- Secondary Excavation (about 4.9-feet into rock)
- Approximate GWE&T Area
- SSDS AOC 1 Area
- Groundwater Pump and Treat System
- CONCRETE FILLED FLOOR TRENCH (POSSIBLE FORMER PIPE CHASE)
- OPEN FLOOR TRENCH (POSSIBLE PIPE CHASE)
- GRASS COVERED MEDIAN
- STAIRWAY
- BCP BOUNDARY

Note:
(1) SITE PLAN DEVELOPED FROM BERO ASSOCIATES ARCHITECTS SITE PLAN FOR 690 SAINT PAUL STREET, ROCHESTER CHARTER SCHOOL SCIENCE AND TECHNOLOGY, DATED APRIL 11, 2000. LOCATIONS OF VEGETATED AREAS, CONCRETE, ETC. ARE CONSIDERED APPROXIMATE.

Path: \\PROJECTS1\ProjectsAM\Genesee Valley Real Estate Co\209280 - 690 St Paul Remedial Invest\Drawings\O&M Plan Drawings\Fiigure 6 - Recovery Trenches.mxd

LABELLA Associates, D.P.C.
ENGINEERS | PLANNERS | SCIENTISTS
ROCHESTER, NY 14614
P: (585) 454-6110
F: (585)454-3066
www.labellapc.com
COPYRIGHT 2003

Engineering Control (EC) Locations

SITE MANAGEMENT PLAN

BROWNFIELD CLEANUP PROGRAM

690 SAINT PAUL STREET ROCHESTER, NEW YORK

VOLUNTEER: GENESEE VALLEY REAL ESTATE COMPANY

It is a violation of New York Education Law Article 145 Sec.7209, for any person, unless acting under the direction of a licensed architect, professional engineer, or land surveyor, to alter an item in any way. If an item bearing the seal of an architect, engineer, or land surveyor is altered; the altering architect, engineer, or land surveyor shall affix to the item their seal and notation "altered by" followed by their signature and date of such alteration, and a specific description of the alteration.

0 30 60 Feet

1 inch = 30 feet

INTENDED TO PRINT ANSI D

DATE; 7/31/2017

209280

FIGURE 6

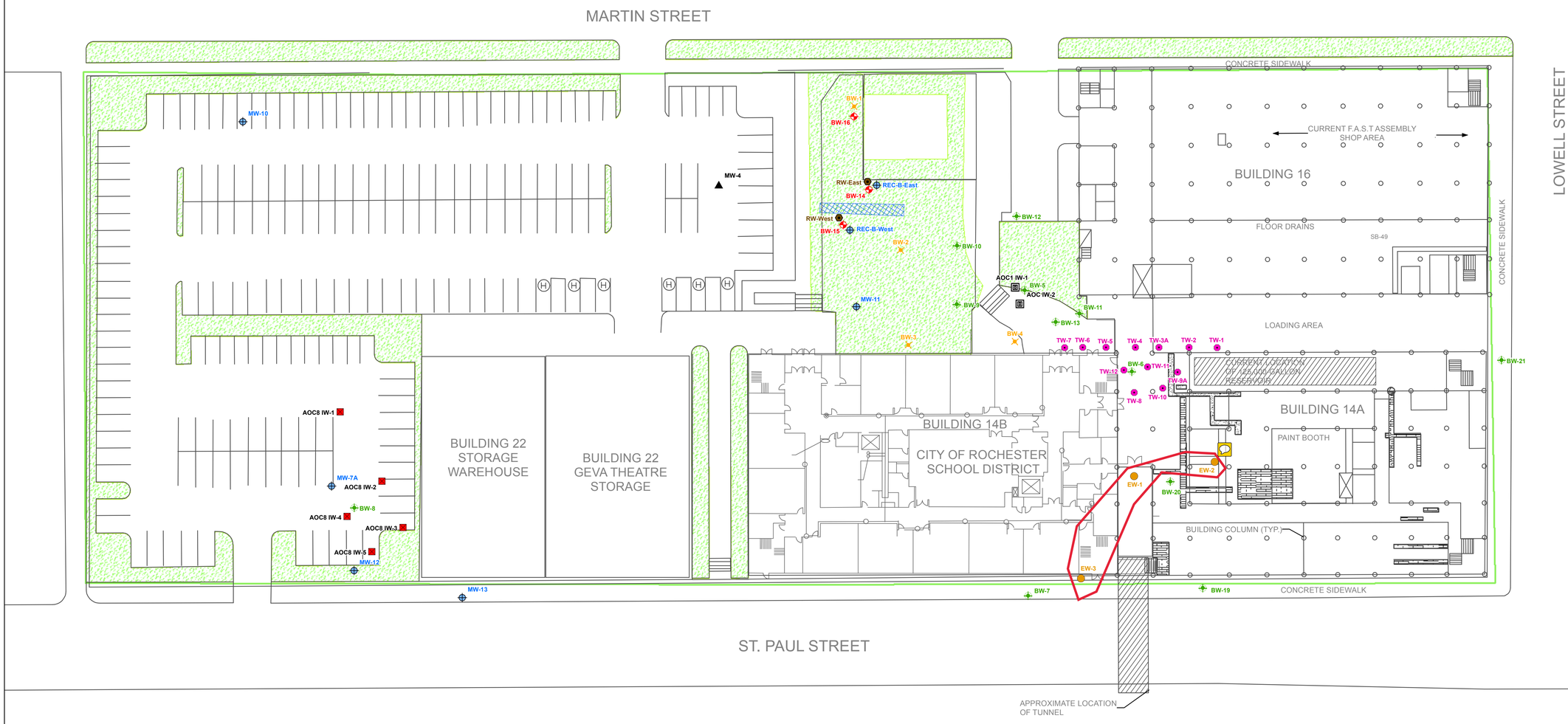

Legend

- PRE-BCP BEDROCK WELL
- BCP OVERBURDEN WELL
- AOC #8 INJECTION WELL/TRENCH
- AOC #1 INJECTION WELL/TRENCH
- ORIGINAL RECOVERY WELL
- DESIGN PHASE INVESTIGATION RECOVERY WELL
- GROUNDWATER EXTRACTION WELL
- GROUNDWATER INJECTION WELL AOC #1
- BCP BEDROCK WELLS
- TUNNEL
- BCP BOUNDARY
- CONCRETEfilledTRENCH — *CONCRETE FILLED FLOOR TRENCH (POSSIBLE FORMER PIPE CHASE)*
- OPEN FLOOR TRENCH — *OPEN FLOOR TRENCH (POSSIBLE PIPE CHASE)*
- GRASS — *GRASS COVERED MEDIAN*
- STAIRS — *STAIRWAY*

Note:
(1) SITE PLAN DEVELOPED FROM BERO ASSOCIATES ARCHITECTS SITE PLAN FOR 690 SAINT PAUL STREET, ROCHESTER CHARTER SCHOOL SCIENCE AND TECHNOLOGY, DATED APRIL 11, 2000.
(2) ALL LOCATIONS SHOULD BE CONSIDERED APPROXIMATE.

Path: \\PROJECTS1\Projects\AM\Genesee Valley Real Estate Co\209280 - 690 St Paul Remedial Invest\Drawings\O&M Plan Drawings\Figure 7 - Well Network.mxd

LABELLA Associates, D.P.C.
300 STATE STREET
ROCHESTER, NY 14614
P: (585) 454-6110
F: (585)454-3066
www.labellapc.com
COPYRIGHT 2003

EXISTING WELLS AND WELLS MONITORED VIA SAMPLING FOR CHEMICAL OF CONCERNS

OPERATION AND MAINTENANCE PLAN

BROWNFIELD CLEANUP PROGRAM

690 SAINT PAUL STREET ROCHESTER, NEW YORK

VOLUNTEER: GENESEE VALLEY REAL ESTATE COMPANY

It is a violation of New York Education Law Article 145 Sec.7209, for any person, unless acting under the direction of a licensed architect, professional engineer, or land surveyor, to alter an item in any way. If an item bearing the seal of an architect, engineer, or land surveyor is altered; the altering architect, engineer, or land surveyor shall affix to the item their seal and notation "altered by" followed by their signature and date of such alteration, and a specific description of the alteration.

N E W S

0 30 Feet

1 inch = 30 feet

INTENDED TO PRINT ANSI D

DATE; 10/25/2017

209280

FIGURE 7

LABELLA Associates, D.P.C. | Engineering Architecture Environmental Planning

APPENDIX A

GPTS MONITORING FORM

LABELLA Associates, D.P.C.

300 STATE STREET, SUITE 201
ROCHESTER, NEW YORK 14614
PHONE: (585) 454-6110
FAX: (585-454-3066

GROUNDWATER PUMP & TREAT SYSTEM INSPECTION FORM

PROJECT NAME: NYSDEC BCP SITE NO. C828159
LOCTION: 690 ST. PAUL STREET, ROCHESTER, NEW YORK
PROJECT NO.: 209280
INSPECTED BY:
DATE:
WEATHER:

INSPECTION EVENT			GP&TS COMPONENT	OBSERVATION	COMMENTS
MONTHLY	QUARTERLY	ANNUALLY			
			IS VENT FAN IN GPTS ROOM OPERATING	YES / NO	
			IS GP&TS OPERATING	YES / NO	
			ARE THERE ANY VISIBLE LEAKS	YES / NO	
			COMPRESSOR FUNCTIONING PROPERLY	YES / NO	
			PIPING, VALVES, FITTINGS INSPECTED	YES / NO	
			TRANSFER PUMPS FUNCTIONING PROPERLY	YES / NO	
			CARBON VESSELS PRESURE BELOW 150 PSIG?	YES / NO	
			CONDITION OF EQUALIZATION TANK	GOOD / POOR	
			RECOVERY PUMPS INSPECTED/FUNCTIONING PROPERLY	YES / NO	
			MCPW SEWER USE PERMIT WATER SAMPLE COLLECTED	YES / NO	
			WATER SAMPLE COLLECTED BETWEEN EACH EXTRACTION WELL AND EQUALIZATION TANK	YES / NO	
			WATER SAMPLE COLLECTED BETWEEN EQUALIZATION TANK AND 1ST CARBON VESSEL	YES / NO	
			WATER SAMPLE COLLECTED AFTER 2ND CARBON VESSEL	YES / NO	

If you have questions or comments, contact us.
Pour toute question ou tout commentaire, nous contacter.
Si tiene dudas o comentarios, contáctenos.

1-888-895-4549 • www.dewalt.com

INSTRUCTION MANUAL
GUIDE D'UTILISATION
MANUAL DE INSTRUCCIONES

INSTRUCTIVO DE OPERACIÓN, CENTROS DE SERVICIO Y PÓLIZA DE GARANTÍA. **ADVERNTENCIA:** LÉASE ESTE INSTRUCTIVO ANTES DE USAR EL PRODUCTO.

DEWALT®

DXCMV7518075

Two Stage, Belt Drive, Electric Air Compressors
Compresseurs d'air électriques à un étage à entraînement par courroie
Compresores eléctricos de aire, de una sola etapa y accionamiento por correa

(OCT2013) Part No. 200-2941-A DXCMV7518075 Copyright © 2007, 2008, 2009, 2010 DEWALT

MAT Industries, LLC, Long Grove, IL 60047

English

Air Compressor

A. Pump Air Intake Filter
B. Auto(-)/Off(O) Switch
C. Air Tank Pressure Gauge
D. Air Outlet
E. Safety Valve
F. Air Tank Drain Valve
G. Pump Oil Fill Plug
H. Pump Oil Drain Plug
I. Check Valve
J. Magnetic Starter

Pump Specifications

2 Cylinder
Two Stage
Oil Lubricated
Cast iron crankcase, cylinder, and head
Weight: 136 lbs. (62 kg.)
Oil Capacity: 53 oz. (1567 mL)

Specifications

MODEL	**DXCMV7518075**
WEIGHT	623 lbs. (283 kg)
HEIGHT	71""
WIDTH	30.78”
AIR TANK CAPACITY	80 gallons (302,8 liters)
APPROX. BLOW OFF PRESSURE	200 psi

FIG. 1

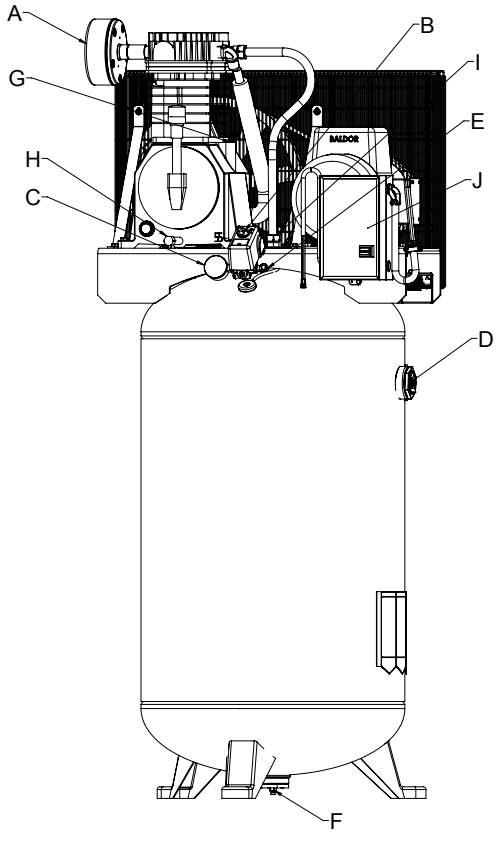

Hot Surfaces

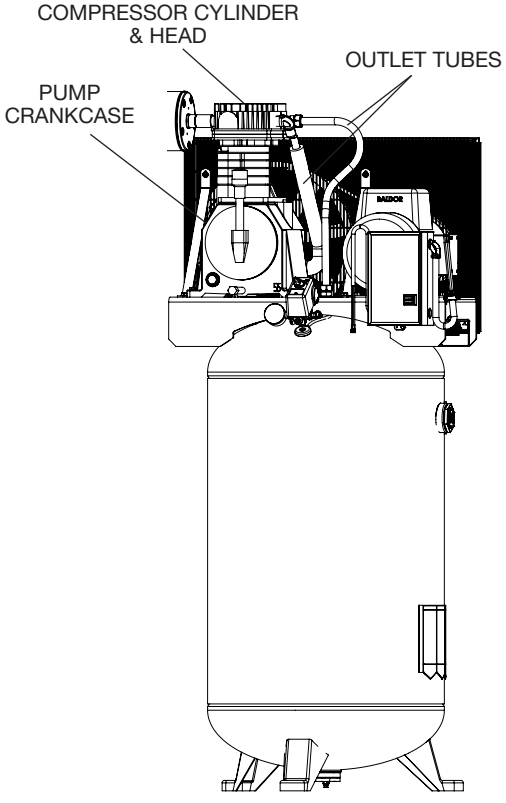

FIG. 2

Definitions: Safety Guidelines

The definitions below describe the level of severity for each signal word. Please read the manual and pay attention to these symbols.

⚠ ***DANGER:*** *Indicates an imminently hazardous situation which, if not avoided,* ***will*** *result in* ***death or serious injury****.*

⚠ ***WARNING:*** *Indicates a potentially hazardous situation which, if not avoided,* ***could*** *result in* ***death or serious injury****.*

⚠ ***CAUTION****: Indicates a potentially hazardous situation which, if not avoided,* ***may*** *result in* ***minor or moderate injury****.*

NOTICE: *Indicates a practice* ***not related to personal injury*** *which, if not avoided,* ***may*** *result in* ***property damage.***

IF YOU HAVE ANY QUESTIONS OR COMMENTS ABOUT THIS OR ANY DEWALT TOOL, CALL US TOLL FREE AT: **1-888-895-4549**

Important Safety Instructions

⚠ ***WARNING:*** *Do not operate this unit until you read this instruction manual for safety, operation and maintenance instructions.*

⚠ ***WARNING: CALIFORNIA PROPOSITION 65 WARNING:*** *This product contains chemicals known to the State of California to cause cancer, and birth defects or other reproductive harm.* ***Wash hands after handling.***

⚠ ***WARNING:*** *Some dust contains chemicals known to the State of California to cause cancer, birth defects or other reproductive harm such as asbestos and lead in lead based paint.*

English

SAVE THESE INSTRUCTIONS



⚠ DANGER: RISK OF EXPLOSION OR FIRE

WHAT CAN HAPPEN	HOW TO PREVENT IT
• It is normal for electrical contacts within the motor and pressure switch to spark.	• Always operate the compressor in a well ventilated area free of combustible materials, gasoline, or solvent vapors.
• If electrical sparks from compressor come into contact with flammable vapors, they may ignite, causing fire or explosion.	• If spraying flammable materials, locate compressor at least 20' (6.1 m) away from spray area. An additional length of air hose may be required. • Store flammable materials in a secure location away from compressor.
• Restricting any of the compressor ventilation openings will cause serious overheating and could cause fire.	• Never place objects against or on top of compressor. • Operate compressor in an open area at least 12" (30.5 cm) away from any wall or obstruction that would restrict the flow of fresh air to the ventilation openings. • Operate compressor in a clean, dry well ventilated area. Do not operate unit in any confined area. Store indoors.
• Unattended operation of this product could result in personal injury or property damage. To reduce the risk of fire, do no allow the compressor to operator unattended	• Always remain in attendance with the product when it is operating. • Always turn off and disconnect electrical supply from unit when not in use.



⚠ DANGER: RISK TO BREATHING (ASPHYXIATION)

WHAT CAN HAPPEN	HOW TO PREVENT IT
• The compressed air directly from your compressor is not safe for breathing. The air stream may contain carbon monoxide, toxic vapors, or solid particles from the air tank. Breathing these contaminants can cause serious injury or death.	• Never use air obtained directly from the compressor to supply air for human consumption. The compressor is not equipped with suitable filters and in-line safety equipment for human consumption.
• Exposure to chemicals in dust created by power sanding, sawing, grinding, drilling and other construction activities may be harmful. • Sprayed materials such as paint, paint solvents, paint remover, insecticides, weed killers, may contain harmful vapors and poisons.	• Work in an area with good cross ventilation. Read and follow the safety instructions provided on the label or safety data sheets for the materials you are spraying. Always use certified safety equipment: NIOSH/OSHA respiratory protection or properly fitting face mask designed for use with your specific application.



⚠ DANGER: RISK OF BURSTING

Air Tank: On February 26, 2002, the U.S. Consumer Product Safety Commission published Release # 02-108 concerning air compressor tank safety:

Air compressor receiver tanks do not have an infinite life. Tank life is dependent upon several factors, some of which include operating conditions, ambient conditions, proper installations, field modifications, and the level of maintenance. The exact effect of these factors on air receiver life is difficult to predict.

If proper maintenance procedures are not followed, internal corrosion to the inner wall of the air receiver tank can cause the air tank to unexpectedly rupture allowing pressurized air to suddenly and forcefully escape, posing risk of injury to consumers.

Your compressor air tank must be removed from service by the end of the year shown on your tank warning label.

The following conditions could lead to a weakening of the air tank, and result in a violent air tank explosion:

WHAT CAN HAPPEN	HOW TO PREVENT IT
• Failure to properly drain condensed water from air tank, causing rust and thinning of the steel air tank.	• Drain air tank daily or after each use. If air tank develops a leak, replace it immediately with a new air tank or replace the entire compressor.
• Modifications or attempted repairs to the air tank.	• Never drill into, weld or make any modifications to the air tank or its attachments. Never attempt to repair a damaged or leaking air tank. Replace with a new air tank.
• Unauthorized modifications to the safety valve, or any other components which control air tank pressure.	• The air tank is designed to withstand specific operating pressures. Never make adjustments or parts substitutions to alter the factory set operating pressures.
Attachments & Accessories:	
• Exceeding the pressure rating of air tools, spray guns, air operated accessories, tires and other inflatables can cause them to explode or fly apart, and could result in serious injury.	• Follow the equipment manufacturers recommendation and never exceed the maximum allowable pressure rating of attachments. Never use compressor to inflate small low pressure objects such as children's toys, footballs, basketballs, etc.
Tires:	
• Over inflation of tires could result in serious injury and property damage.	• Use a tire pressure gauge to check the tires pressure before each use and while inflating tires; see the tire sidewall for the correct tire pressure. NOTE: Air tanks, compressors and similar equipment used to inflate tires can fill small tires very rapidly. Adjust pressure regulator on air supply to no more than the rating of the tire pressure. Add air in small increments and frequently use the tire gauge to prevent over inflation.



⚠ *DANGER: RISK OF INJURY OR PROPERTY DAMAGE WHEN TRANSPORTING OR STORING*

WHAT CAN HAPPEN	HOW TO PREVENT IT
• Oil can leak or spill and could result in fire or breathing hazard; serious injury or death can result. Oil leaks will damage carpet, paint or other surfaces in vehicles or trailers.	• Always place compressor on a protective mat when transporting to protect against damage to vehicle from leaks. Remove compressor from vehicle immediately upon arrival at your destination. Always keep compressor level and never lie on its side.



⚠ *WARNING: RISK FROM FLYING OBJECTS*

WHAT CAN HAPPEN	HOW TO PREVENT IT
• The compressed air stream can cause soft tissue damage to exposed skin and can propel dirt, chips, loose particles and small objects at high speed, resulting in property damage or personal injury.	• Always wear certified safety equipment: ANSI Z87.1 eye protection (CAN/CSA Z94.3) with side shields when using the compressor. • Never point any nozzle or sprayer toward any part of the body or at other people or animals. • Always turn the compressor off and bleed pressure from the air hose and air tank before attempting maintenance, attaching tools or accessories.



⚠ *WARNING: RISK OF HOT SURFACES*

WHAT CAN HAPPEN	HOW TO PREVENT IT
• Touching exposed metal such as the compressor head or outlet tubes, can result in serious burns.	• Never touch any exposed metal parts on compressor during or immediately after operation. Compressor will remain hot for several minutes after operation • Do not reach around protective shrouds or attempt maintenance until unit has been allowed to cool.



⚠ *WARNING: RISK OF ELECTRICAL SHOCK*

WHAT CAN HAPPEN	HOW TO PREVENT IT
• Your compressor is powered by electricity. Like any other electrically powered device, if it is not used properly it may cause electric shock.	• Never operate the compressor outdoors when it is raining or in wet conditions. • Never operate compressor with protective covers removed or damaged.
• Repairs attempted by unqualified personnel can result in serious injury or death by electrocution.	• Any electrical wiring or repairs required on this product should be performed by authorized service center personnel in accordance with national and local electrical codes.
• **Electrical Grounding:** Failure to provide adequate grounding to this product could result in serious injury or death from electrocution. Refer to **Grounding Instructions** paragraph in the *Installation* section.	• Make certain that the electrical circuit to which the compressor is connected provides proper electrical grounding, correct voltage and adequate fuse protection.



⚠ *WARNING: RISK OF UNSAFE OPERATION*

WHAT CAN HAPPEN	HOW TO PREVENT IT
• Unsafe operation of your air compressor could lead to serious injury or death to you or others.	• Review and understand all instructions and warnings in this manual. • Become familiar with the operation and controls of the air compressor. • Keep operating area clear of all persons, pets, and obstacles. • Keep children away from the air compressor at all times. • Do not operate the product when fatigued or under the influence of alcohol or drugs. Stay alert at all times. • Never defeat the safety features of this product. • Equip area of operation with a fire extinguisher. • Do not operate machine with missing, broken, or unauthorized parts. • Never stand on the compressor.



⚠ *WARNING: RISK FROM MOVING PARTS*

WHAT CAN HAPPEN	HOW TO PREVENT IT
• Moving parts such as the pulley, flywheel, and belt can cause serious injury if they come into contact with you or your clothing.	• Never operate the compressor with guards or covers which are damaged or removed. • Keep your hair, clothing and gloves away from moving parts. Loose clothes, jewelry or long hair can be caught in moving parts. • Air vents may cover moving parts and should be avoided as well.
• Attempting to operate compressor with damaged or missing parts or attempting to repair compressor with protective shrouds removed can expose you to moving parts and can result in serious injury.	• Any repairs required on this product should be performed by a DEWALT factory service center or a DEWALT authorized service center.



⚠ WARNING: RISK OF INJURY FROM LIFTING

WHAT CAN HAPPEN	HOW TO PREVENT IT
• Serious injury can result from attempting to lift too heavy an object.	• The compressor is too heavy to be lifted by one person. Obtain assistance from others before lifting.



⚠ CAUTION: RISK FROM NOISE

WHAT CAN HAPPEN	HOW TO PREVENT IT
• Under some conditions and duration of use, noise from this product may contribute to hearing loss.	• Always wear certified safety equipment: ANSI S12.6 (S3.19) hearing protection.

SAVE THESE INSTRUCTIONS FOR FUTURE USE

Know Your Air Compressor

READ THIS OWNER'S MANUAL AND SAFETY RULES BEFORE OPERATING YOUR UNIT. Compare the illustrations with your unit to familiarize yourself with the location of various controls and adjustments. Save this manual for future reference.

FEATURES

AUTO (-) / OFF (O) SWITCH

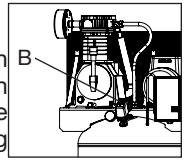

Place this switch (B) in the AUTO (-) position to provide automatic power to the pressure switch and OFF(O) to remove power at the end of each use. NOTE: ALWAYS ensure the switch (B) is in the OFF (O) position before removing or replacing pressure switch cover.

PRESSURE SWITCH

The pressure switch (B) automatically starts the motor when the air tank pressure drops below the factory set cut-in pressure. It stops the motor when the air tank pressure reaches the factory set cut-out pressure.

SAFETY VALVE

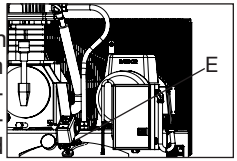

This valve (E) is designed to prevent system failures by relieving pressure from the system when the compressed air reaches a predetermined level. The valve is preset by the manufacturer and must not be removed or modified in any way.

CHECK VALVE

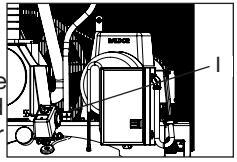

When the air compressor is operating, the check valve (I) is open, allowing compressed air to enter the air tank. When the air compressor

reaches cut-out pressure, the check valve closes, allowing air pressure to remain inside the air tank.

AIR INTAKE FILTER

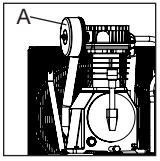

The filter (A) is designed to clean air entering the pump. To ensure the pump continually receives a clean, cool, and dry air supply the filter must always be clean and the filter intake must be free from obstructions.

AIR TANK DRAIN VALVE

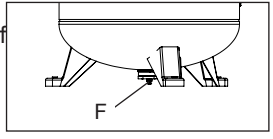

The drain valve (F) is located at the base of the air tank and is used to drain condensation at the end of each use. See Draining Air Tank under *Maintenance*.

TANK PRESSURE GAUGE

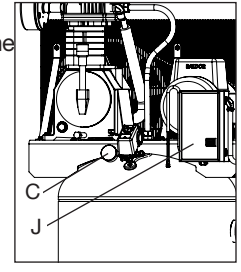

The tank pressure gauge (C) indicates the reserve air pressure in the tank.

MAGNETIC STARTER

NOTE: These units require a magnetic starter.

Magnetic starters (J) that are not factory mounted on the compressor can be mounted on the wall if desired. Mount as close to compressor as possible. Size the wires, protect them with conduit, and provide branch circuit protection per the National Electrical Code.

GLOBE VALVE/AIR DISCHARGE VALVE: *(sold separately, not shown)*

Opens and closes air distribution from compressor. See **Air Distribution System** paragraph under *Installation*.

REGULATOR *(sold separately, not shown)*:

An air pressure regulator or a separate air transformer which combines the functions of air regulation and/or moisture and dirt removal is recommended for most applications. See **Air Distribution System** paragraph under *Installation.*

AIR COMPRESSOR PUMP

The pump compresses air into the air tank. Working air is not available until the compressor has raised the air tank pressure above that required at the air outlet.

MAGNETIC STARTER RESET SWITCH

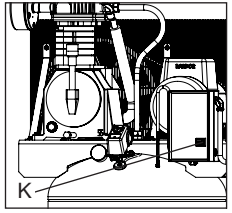

If the motor shuts down because of overload, wait 10–15 minutes so the motor can cool down. To restart:

1. Set the Auto/Off switch to OFF (O).
2. Allow the motor to cool.
3. Depress the reset button (K) on the magnetic starter.
4. Set the Auto/Off switch to AUTO (-).

INSTALLATION

Assembly (Fig. 1)

Unpack the air compressor. Inspect the unit for damage. If the unit has been damaged in transit, contact the carrier and complete a damage claim. Do this immediately because there are time limitations to damage claims.

The carton should contain:

- air compressor
- operator and parts manuals

Check the compressor's serial label to ensure that you have received the model ordered, and that it has the required pressure

rating for its intended use.

INSTALLING HOSES

⚠ ***WARNING:*** *Risk of unsafe operation. Firmly grasp hose in hand when installing or disconnecting to prevent hose whip.*

1. Ensure regulated pressure gauge reads 0 psi.
2. Apply sealant tape to hose threads.
3. Assemble hose to air outlet (D). ***IMPORTANT:*** Do not assemble splitters directly to the air outlet (D).

NOTE: Assembling quick connect bodies to air outlet and quick connect plugs to hose ends make connecting and disconnecting hoses simple and easy. Quick connect bodies and plugs are available for purchase from your local dealer or authorized service center.

DISCONNECTING HOSES

⚠ ***WARNING:*** *Risk of unsafe operation. Firmly grasp hose in hand when installing or disconnecting to prevent hose whip.*

1. Ensure regulated pressure gauge reads 0 psi.
2. Remove hose from air outlet (D).

Lubrication and Oil

AIR COMPRESSOR

The air compressor pump was filled **WITH** oil at the manufacturer. Check air compressor pump oil level before operating unit. See **Compressor Pump Oil** under *Maintenance*.

Compatibility

Air tools and accessories that are run off the compressor must be compatible with petroleum based products. If you suspect that a material is not compatible with petroleum products, an air line filter for removal of moisture and oil vapor in compressed air is required.

NOTE: Always use an air line filter to remove moisture and oil vapor when spraying paint.

Location

- Locate the air compressor in a clean, dry, and well ventilated area.
- Located the air compressor at least 12” (30.5 cm) away from the wall or other obstructions that will interfere with the flow of air.
- Locate the air compressor as close to the main power supply as possible to avoid using long lengths of electrical wiring. NOTE: Long lengths of electrical wiring could cause power loss to the motor.
- The air filter must be kept clear of obstructions which could reduce air flow to the air compressor.

HUMID AREAS

In frequently humid areas, moisture may form in the pump and produce sludge in the oil, causing running parts to wear out prematurely. Excessive moisture is especially likely to occur if the unit is located in an unheated area that is subject to large temperature changes. Two signs of excessive humidity are external condensation on the pump when it cools down and a “milky” appearance in compressor oil. You may be able to prevent moisture from forming in the pump by increasing ventilation or operating for longer intervals.

NOISE CONSIDERATIONS

Consult local officials for information regarding acceptable noise levels in your area. To reduce excessive noise, use vibration mounts or silencers, relocate the unit or construct total enclosures or baffle walls. Contact a DEWALT service center or call 1-888-895-4549 for assistance.

Anchoring of the Air Compressor

⚠ ***WARNING****: Risk of bursting. Excessive vibration can weaken the air tank and cause an explosion. The compressor must be properly mounted.*

The air compressor MUST be bolted to a level, solid concrete surface. Use 3/8” lag screws, vibration pads and concrete anchors. If help is needed anchoring the air compressor consult a licensed contractor.

1. Place the air compressor on a level, solid concrete surface. Make sure the concrete is in good condition with no cracks or damage.
2. Mark the surface using the holes in the air compressor feet as a template.
3. Drill holes in the surface for the concrete anchors. Install concrete anchors.
4. Line-up holes in surface with holes in air compressor feet.

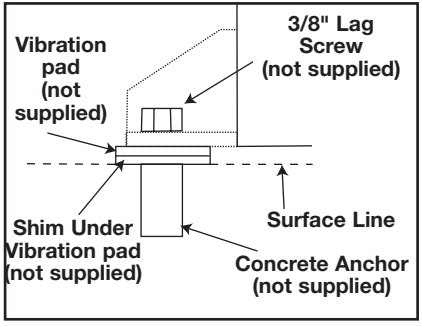

5. Place the vibration pads (not supplied) between the floor and air compressor feet, see figure. If needed use shims to level the unit.
6. Place the 3/8” lag screws through the air compressor feet, vibration pads and into the anchors.
7. Torque 3/8” lag screws to 7-10 ft.-lbs (9.5-13.5 Nm).

Wiring Instructions

⚠ ***WARNING:*** *Improper electrical installation of this product may void its warranty and your fire insurance. Have circuit wiring performed by qualified personnel such as a licensed electrician who is familiar with the current national electrical code and any prevailing local electrical codes.*

⚠ ***WARNING:*** *Risk of electrical shock. Improper electrical grounding can result in electrical shock. The wiring should be done by a qualified electrician.*

A qualified electrician needs to knows the following before wiring:

1. The amperage rating of the electrical box should be adequate. Refer to the *Specifications*, in the parts manual, for this information.
2. The supply line should have the same electrical characteristics (voltage, cycle, phase) as the motor. Refer to the motor nameplate, on side of motor, for this information.

NOTE: The wiring used must be rated for the motor nameplate voltage, plus or minus 10%. Refer to local codes for recommended wire sizes, correct wire size, and maximum wire run; undersize wire causes high amp draw and overheating to the motor.

⚠ ***WARNING:*** *Risk of electrical shock. Electrical wiring must be located away from hot surfaces such as manifold assembly, compressor outlet tubes, heads, or cylinders.*

Grounding Instructions

This product should be connected to a metallic, permanent wiring system, of and equipment-grounding terminal or lead on the product.

Main power disconnect switch

Install a main power disconnect switch in the line from the panel to the compressor. The main power disconnect switch must be located near the compressor, for ease of use and safety. When turned OFF, the main power disconnect switch shuts off all power to the compressor. When it is turned ON, the compressor will start and stop automatically, controlled by the pressure switch.

Air Distribution System

⚠ ***WARNING****: Risk of bursting. Plastic or PVC pipe is not designed for use with compressed air. Regardless of its indicated pressure rating, plastic pipe can burst from air pressure. Use only metal pipe for air distribution lines.*

INSTALLING AND DISCONNECTING HOSES

⚠ ***WARNING:*** *Risk of unsafe operation. Firmly grasp hose in hand when installing or disconnecting to prevent hose whip. Ensure regulated pressure gauge reads 0 psi.*

The next figure represents a typical air distribution system. The following are tips to remember when setting up the air compressor's air distribution system.

NOTE: Compressed air from oil lube air compressors will contain water condensation and oil mist. Several drains, traps and filters will be needed to supply air without water (including aerosols) or oil to spray equipment, air tools and accessories requiring filtered air. Always read the instructions for the air tools and accessories being used.

- Use pipe that is the same size as the air tank outlet. Piping that is too small will restrict the flow of air.
- If piping is over 100' (30.5 m) long, use the next larger size.
- Bury underground lines below the frost line and avoid pockets where condensation can gather and freeze. Apply pressure before underground lines are covered to make sure all pipe joints are free of leaks.
- A flexible coupling is recommended to be installed between the globe valve/air discharge outlet and main air distribution line to allow for vibration.
- A separate regulator is recommended to control the air pressure. Air pressure from the tank is usually too high for individual air driven tools.
- DO NOT install lubricators between the tank and any spray equipment, air tool or accessory requiring oil-free filtered air.
- Drain all traps, filters and dirt legs daily.

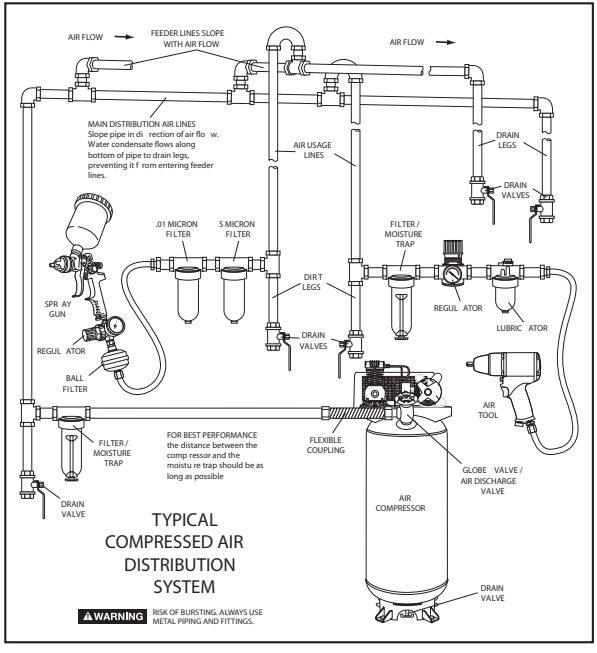

How to Use Your Unit (Fig 3)

How to Stop:

Set the Auto/Off switch to “Off”.

Before Starting

⚠ ***WARNING:*** *Do not operate this unit until you read this instruction manual for safety, operation and maintenance instructions.*

Break-in Procedure

NOTICE: *Risk of property damage. Serious damage may result if the following break-in instructions are not closely followed.*

This procedure is required **before** the air compressor is put into service and when the check valve or a complete compressor pump has been replaced.

1. Make sure the Auto/Off switch is in the “Off” position.
2. Check oil level in pump. See **Oil** paragraph in the *Maintenance* section for instructions.
3. Recheck all wiring. Make sure wires are secure at all terminals connections. Make sure all contacts move freely and are not obstructed.
4. Open the drain valve (counterclockwise) fully to permit air to escape and prevent air pressure build up in the air tank during the break-in period.
5. Move the Auto/Off switch to “Auto” position. The compressor will start.
6. Run the compressor for 30 minutes. Make sure the drain valve and all air lines are open so there is only a minimal air pressure build-up in tank.

NOTE: *After about 30 minutes, If the unit does not operate properly, SHUT DOWN IMMEDIATELY, and contact Product Service.*

7. Check all air line fittings and connections/piping for air leaks by applying a soap solution. Correct if necessary. **NOTE:** Minor leaks can cause the air compressor to overwork, resulting in premature breakdown or inadequate performance.
8. Check for excessive vibration. Readjust or shim air compressor feet, if necessary.

9. After 30 minutes, turn the Auto/Off switch to the “Off” position.
10. Close the drain valve.
11. Turn the Auto/Off switch to the “Auto” position. The air receiver will fill to “cut-out” pressure and the motor will stop.

The compressor is now ready for use.

Before Each Start-Up

1. Place Auto/Off switch to “Off”.
2. Close the drain valve.
3. Visually inspect air lines and fittings for leaks.
4. Check safety valve. See **To Check Safety Valve** under *Maintenance*.
5. Attach hose and accessories.

⚠***WARNING:*** *Risk of unsafe operation. Firmly grasp air hose in hand when installing or disconnecting to prevent hose whip.*

⚠***WARNING:*** *Risk of unsafe operation. Do not use damaged or worn accessories.*

NOTE: A regulator MUST be installed when using accessories rated at less than 135 psi.

NOTE: The hose or accessory will require a quick connect plug if the air outlet is equipped with a quick connect socket.

⚠***WARNING:*** *Risk of bursting. Too much air pressure causes a hazardous risk of bursting. Check the manufacturer’s maximum pressure rating for air tools and accessories. The regulator outlet pressure must never exceed the maximum pressure rating.*

⚠***CAUTION:*** *Risk of unsafe operation. Compressed air from the unit may contain water condensation and oil mist. Do not spray unfiltered air at an item that could be damaged by moisture. Some air tools and accessories may require filtered air. Read the instructions for the air tools and accessories.*

How to Start

1. Turn the Auto/Off switch to “Auto” and allow tank pressure to build. Motor will stop when tank pressure reaches “cut-out” pressure.
2. When the tank pressure reaches "cut-out" pressure open the globe valve/air discharge valve.

IMPORTANT: When using regulator and other accessories refer to the manufacturers instructions.

⚠***WARNING:*** *Risk of bursting. If any unusual noise or vibration is noticed, stop the compressor immediately and have it checked by a trained service technician.*

The compressor is ready for use.

Shut-down (Fig. 1)

1. **Move Auto/Off switch to the OFF position. NOTE: If finished using compressor, follow Steps 2 - 6.**
2. **Remove hose and accessory.**

⚠***WARNING:*** *Risk of unsafe operation. Firmly grasp air hose in hand when installing or disconnecting to prevent hose whip.*

3. **Drain the air tank, see Draining Air Tank under** *Maintenance*. **Ensure air tank pressure gauge reads 0 psi.**

⚠***WARNING:*** *Risk of bursting. Drain air tank daily. Water will condense in air tank. If not drained, water will corrode and weaken the air tank causing a risk of air tank rupture.*

4. **Allow the compressor to cool down.**
5. **Wipe air compressor clean and store in a safe, non-freezing area.**

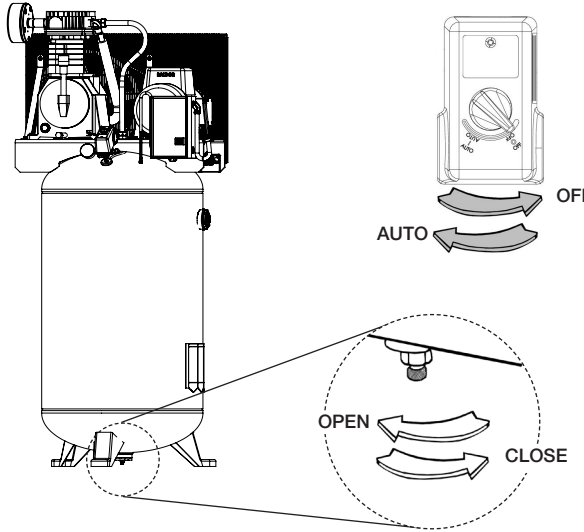

FIG. 3

MAINTENANCE

Maintenance Chart

Procedure	Daily	Weekly	Monthly	1 year or 200 Hours	See tank warning label
Check safety valve	X				
Inspect air filter		X+			
Drain air tank	X				
Check pump oil level	X				
Change pump oil				X **+	
Oil leak inspection	X				
Inspect drive belt	X				
Check drive belt tension			X		
Check pulley/flywheel alignment				X	
Check for unusual noise/vibration	X				
Check for air leaks	X*				
Clean compressor exterior		X			
Remove tank from service					X++

* To check for air leaks apply a solution of soapy water around joints. While compressor is pumping to pressure and after pressure cuts out, look for air bubbles to form.

** The pump oil must be changed after the first 20 hours or operation. Thereafter, when using synthetic blend non-detergent air compressor oil, change oil every 200 hours of operation or once a year, whichever comes first.

\+ Perform more frequent in dusty or humid conditions.

++ For more information, call 1-888-895-4549 .

⚠ ***WARNING:*** *Risk of unsafe operation. Unit cycles automatically when power is on. When performing maintenance, you may be exposed to voltage sources, compressed air, or moving parts. Personal injuries can occur. Before performing any maintenance or repair, disconnect power source from the compressor and bleed off all air pressure.*

To ensure efficient operation and longer life of the air compressor outfit, a routine maintenance schedule should be prepared and followed. The following routine maintenance schedule is geared to an outfit in a normal working environment operating on a daily basis.

If necessary, the schedule should be modified to suit the conditions under which your compressor is used. The modifications will depend upon the hours of operation and the working environment. Compressor outfits in an extremely dirty and/or hostile environment will require a greater frequency of all maintenance checks.

NOTE: See Operation section for the location of controls.

Checking Safety Valve (Fig. 1)

⚠ ***WARNING:*** *Hot surfaces. Risk of burn. Tubes, pump head, and surrounding parts are very hot, do not touch (see the Hot Surfaces identified in Fig. 2). Allow compressor to cool prior to servicing.*

⚠ ***WARNING:*** Risk of bursting. If the safety valve does not work properly, over-pressurization may occur, causing air tank rupture or an explosion.

⚠ ***WARNING:*** *Risk from flying objects. Always wear certified safety equipment: ANSI Z87.1 eye protection (CAN/CSA Z94.3) with side shields.*

Before starting compressor, pull the ring on the safety valve to make sure that the safety valve operates freely. If the valve is stuck or does not operate smoothly, it must be replaced with the same type of valve.

Checking Air Filter (Fig. 1)

⚠ ***WARNING:*** *Hot surfaces. Risk of burn. Tubes, pump head, and surrounding parts are very hot, do not touch (see the Hot Surfaces identified in Fig. 2). Allow compressor to cool prior to servicing.*

A dirty air filter will not allow the compressor to operate at full capacity. Keep the air filter clean at all times.

1. **Ensure Auto/Off switch (B) is in the OFF Position.**
2. **Allow unit to cool.**
3. Remove the wing nut (L).
4. Remove the outer metal cover (M).
5. Check the filter element (N) if it is dirty or filled with paint, replace it.
6. Place the outer metal cover back over the filter element.
7. Secure with the wing nut.

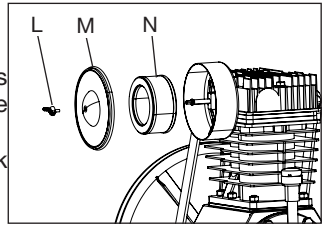

⚠ ***CAUTION:*** Risk of unsafe operation. Do not operate without air filter.

Draining Air Tank (Fig. 3)

⚠ ***WARNING:*** *Risk of unsafe operation. Air tanks contain high pressure air. Keep face and other body parts away from outlet of drain. Use eye protection [ANSI Z87.1 (CAN/CSA Z94.3)] when draining as debris can be kicked up into face.*

⚠ ***WARNING:*** *Risk from noise. Use ear protection (ANSI S12.6 (S3.19) as air flow noise is loud when draining.*

NOTE: All compressed air systems generate condensation that accumulates in any drain point (e.g., tanks, filter, aftercoolers, dryers). This condensate contains lubricating oil and/or substances which may be regulated and must be disposed of in accordance with local, state, and federal laws and regulations.

1. Set the Auto/Off switch to “Off”.
2. Pull ring on safety valve allowing air to bleed from the tank until tank pressure is approximately 20 psi. Release safety valve ring.
3. Drain water from air tank by opening drain valve (counterclockwise) on bottom of tank.

⚠ ***WARNING:*** *Risk of bursting. Water will condense in the air tank.*

If not drained, water will corrode and weaken the air tank causing a risk of air tank rupture.

NOTICE: Risk of property damage. Drain water from air tank may contain oil and rust which can cause stains.

4. After the water has been drained, close the drain valve (clockwise). The air compressor can now be stored.

NOTE: If drain valve is plugged, release all air pressure. The valve can then be removed, cleaned, then reinstalled.

Compressor Pump Oil (Fig. 4)

NOTICE: Risk of property damage. Use air compressor oil only. Multi-weight automotive engine oils like 10W30 should not be used in air compressors. They leave carbon deposits on critical components, thus reducing performance and compressor life.

NOTE: Use synthetic blend non-detergent air compressor oil.

NOTE: Crankcase oil capacity is approximately 53 fluid ounces (1567 ml).

Checking

1. The oil level should be to the middle of the sight glass (O).
2. If needed remove oil fill plug (G) and slowly add oil until it reaches the middle of the sight glass.

Changing

⚠ ***WARNING:*** *Drain tank to release air pressure before removing the oil fill cap or oil drain plug.*

1. Remove the oil fill plug (G).
2. Remove the oil drain plug (H) and drain oil into a suitable container.
3. Replace the oil drain plug (H) and tighten securely
4. Slowly add compressor oil until it reaches the middle of the sight glass (O). **NOTE:** When filling the crankcase, the oil flows very slowly into the pump. If the oil is added too quickly, it will overflow and appear to be full.

⚠ ***CAUTION:*** *Overfilling with oil will cause premature compressor failure. Do not overfill.*

5. Replace oil fill plug (G) and tighten securely.

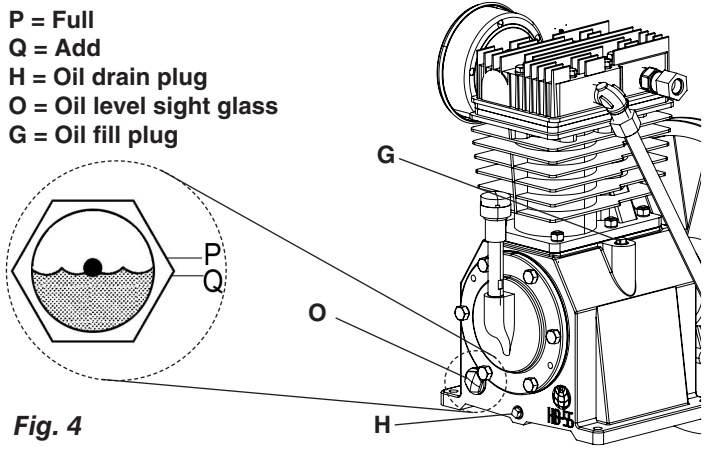

Fig. 4

Belt Replacement

⚠ ***WARNING****: This unit starts automatically. ALWAYS shut off the main power disconnect, and bleed all pressure from the system before servicing the compressor, and when the compressor is not in use. Do not use the unit with the shrouds or belt guard removed. Serious injury could occur from contact with moving*

parts. Hot surfaces. Risk of burn. Pump head, and surrounding parts are very hot, do not touch (see the Hot Surfaces identified in Fig. 2). Allow compressor to cool prior to servicing.

1. Set the Auto/Off lever to “Off”, shut off the main power disconnect, and relieve all air pressure from the air tank.
2. Remove the front of the beltguard by removing the screws and washers (R) using a Torx T25 bit.
3. Mark pump position on saddle.
4. Loosen the motor mounting screws and slide the motor toward the air compressor.
5. Remove the belt and replace with a new one.
6. See the **Adjusting Belt Tension** before tightening motor mounting screws.

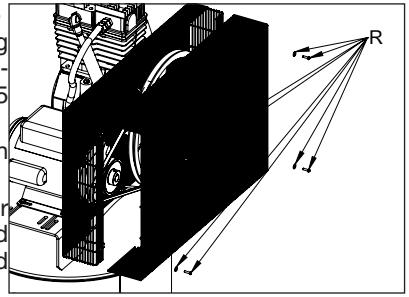

Adjusting Belt Tension

1. Slide motor into original position, line the motor up with the mark made earlier on saddle.
2. Tighten two outside motor mounting screws enough to hold the motor in place for checking pulley and flywheel alignment.

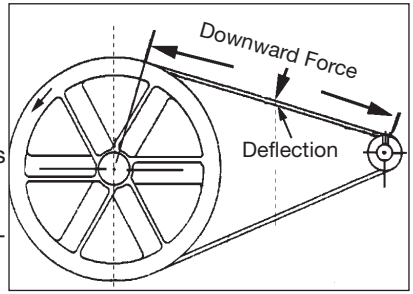

3. The belt should deflect 1/2” (13 mm)at midway between the pulley and the flywheel when a 10 pound (4.6 kg.) weight is applied at the midway point.
3. When proper belt tension is achieved, tighten all four motor mounting screws. Torque to 20-25 ft-lbs (27.1–33.9 Nm).

NOTE: Once the engine pulley has been moved from its factory set location, the grooves of the flywheel and pulley must be aligned to within 1/16” (1.6 mm) to prevent excessive belt wear. Verify the alignment by performing the following **Motor Pulley/Flywheel - Alignment.**

Motor Pulley/Flywheel Alignment

NOTE: Once the motor pulley has been moved from its factory set location, the grooves of the flywheel and pulley must be aligned to within 1/16” (1.6 mm) to prevent excessive belt wear.

The air compressor flywheel and motor pulley must be in-line (in the same plane) within 1/16” (1.6 mm) to assure belt retention within flywheel belt grooves. To check alignment, perform the following steps:

1. Set the Auto/Off lever to “Off”, shut off the main power disconnect, and relieve all air pressure from the air tank.
2. Remove belt guard.
3. Place a straightedge against the outside of the flywheel and the motor drive pulley.
4. Measure the distance between the edge of the belt and the straightedge at points A1 and A2 in figure. The difference between measurements should be no more than 1/16” (1.6 mm).

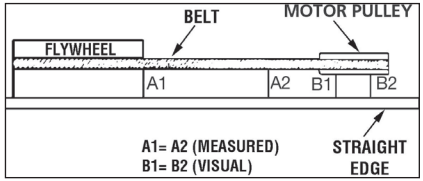

5. If the difference is greater than 1/16” (1.6 mm) loosen the set screw holding the motor drive pulley to the shaft and adjust the pulley’s position on the shaft until the A1 and A2 measurements are within 1/16” (1.6 mm) of each other.
6. Tighten the motor drive pulley set screw.
7. Visually inspect the motor drive pulley to verify that it is perpendicular to the drive motor shaft. Points B1 and B2 of Figure should appear to be equal. If they are not, loosen the setscrew of the motor drive pulley and equalize B1 and B2, using care not to disturb the belt alignment performed in step 2.
8. Retighten the motor drive pulley setscrew. Torque to 145–165 in lbs (16.4–20.3 Nm).
9. Reinstall belt guard.

Air Compressor Pump Intake and Exhaust Valves

Once a year have a Trained Service Technician check the air compressor pump intake and exhaust valves.

Inspect Air Lines and Fittings for Leaks

1. Set the Auto/Off lever to “Off”, shut off the main power disconnect, and relieve all air pressure from the air tank.
2. Apply a soap solution to all air line fittings and connections/ piping.
3. Correct any leaks found.

IMPORTANT: Even minor leaks can cause the air compressor to overwork, resulting in premature breakdown or inadequate performance.

Air compressor Head Bolts - Torquing

The air compressor pump head bolts should be kept properly torqued. Check the torques of the head bolts after the first five hours of operation. Torque to 32-37 ft.-lbs. (43.4-50.2 Nm).

Service and Adjustments

ALL MAINTENANCE AND REPAIR OPERATIONS NOT LISTED MUST BE PERFORMED BY TRAINED SERVICE TECHNICIAN.

⚠ ***WARNING:*** **Risk of unsafe operation. Unit cycles automatically when power is on. When servicing, you may be exposed to voltage sources, compressed air, or moving parts. Before servicing unit unplug or disconnect electrical supply to the air compressor, bleed tank of pressure, and allow the air compressor to cool.**

To Replace or Clean Check Valve

1. Release all air pressure from air tank. See **Draining Air Tank** in the *Maintenance* section.
2. Set the Auto/Off lever to “Off”, shut off the main power disconnect, and relieve all air pressure from the air tank.
3. Using an adjustable wrench loosen outlet tube nut at air tank and pump. Carefully move outlet tube away from check valve.
4. Using an adjustable wrench loosen pressure relief tube nut at air tank. Carefully move pressure relief tube away from check valve.

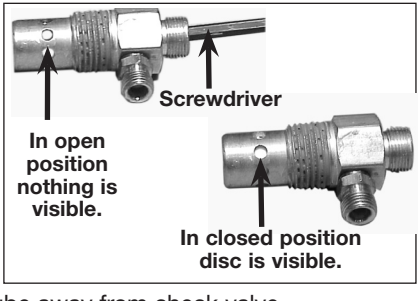

5. Unscrew the check valve (turn counterclockwise) using a 7/8” open end wrench. **NOTE** the orientation for reassembly.

6. Using a screwdriver, carefully push the valve disc up and down. **NOTE:** The valve disc should move freely up and down on a spring which holds the valve disc in the closed position, if not the check valve needs to be cleaned or replaced.
7. Clean or replace the check valve. A solvent, such as paint or varnish remover can be used to clean the check valve.
8. Apply sealant to the check valve threads. Reinstall the check valve (turn clockwise).
9. Replace the pressure release tube. Tighten nuts.
10. Replace the outlet tube and tighten nuts.
11. Perform the Break-in Procedure. See **Break-in Procedure** in the *Operation* section.

Additional Service

Disassembly or service of the air compressor beyond what is covered in this manual is not recommended. If additional service is required, contact your nearest Authorized Warranty Service Center.

Accessories

Recommended accessories for use with your tool are available for purchase from your local dealer or authorized service center. If you need assistance in locating any accessory for your tool, please call 1-888-895-4549 or visit our website www.dewalt.com.

⚠ ***WARNING:*** The use of any other accessory not recommended for use with this tool could be hazardous. Use only accessories rated equal to or higher than the rating of the air compressor.

Service Information

Please have the following information available for all service calls:
Model Number _____ Serial Number _____
Date and Place of Purchase _____

Repairs

To assure product SAFETY and RELIABILITY, repairs, maintenance and adjustment should be performed by a DEWALT factory service center, a DEWALT authorized service center or other qualified service personnel. Always use identical replacement parts.

Limited Warranty

DEWALT Industrial Tools are warranted from date of purchase.

2 Year – Limited warranty on oil-lubricated air compressor pumps.

1 Year – Limited warranty on all other air compressor components. This warranty is not transferable to subsequent owners.

DEWALT will repair or replace, without charge, at DEWALT's option, any defects due to faulty materials or workmanship. For further detail of warranty coverage and warranty repair information, call 1-(888)-895-4549 or visit dewalt.com. This warranty does not apply to accessories or damage caused where repairs have been made or attempted by others. This warranty also does not apply to merchandise sold by DEWALT which has been manufactured by and identified as the product of another company, such as gasoline engines. Such manufacturer's warranty, if any, will apply. **ANY INCIDENTAL, INDIRECT OR CONSEQUENTIAL LOSS, DAMAGE OR EXPENSE THAT MAY RESULT FROM ANY DEFECT, FAILURE OR MALFUNCTION OF THE PRODUCT IS NOT COVERED BY THIS WARRANTY.** Some states do not allow the exclusion of limitation of incidental or consequential damages, so the above limitation or exclusion may not apply to you. **IMPLIED WARRANTIES, INCLUDING THOSE OF MERCHANTABILITY OR FITNESS FOR A PARTICULAR PURPOSE, ARE LIMITED TO ONE YEAR FROM THE DATE OF ORIGINAL PURCHASE.** Some states do not allow limitations on how long an implied warranty lasts, so the above limitations may not apply to you.

What the Company Will Do: (the company) will cover parts and labor to remedy substantial defects due to materials and workmanship during the first year of ownership, with the exceptions noted below. Parts used in repair of whole goods or accessories are warranted for the balance of the original warranty period.

What is not covered Under This Warranty? Failures by the original retail purchaser to install, maintain, and operate said equipment in accordance with standard industry practices. Modifications to the product, or tampering with components, or failure to comply with the specific recommendations of the Company set forth in the owner's manual, will render this warranty null and void. The Company shall not be liable for any repairs, replacements, or adjustments to the equipment, or any costs for labor performed by the purchaser without the Company's prior written approval. The effects of corrosion, erosion, surrounding environmental conditions, cosmetic defects, and routine maintenance items, are specifically excluded from this warranty. Routine maintenance items such as: oil, lubricants, and air filters, as well as changing oil, air filters, belt tensioning, etc… fall under the owner's responsibility. Additional exclusions include: freight damage, failures resulting from neglect, accident, or abuse, induction motors when operated from a generator, oil leaks, air leaks, oil consumption, leaky fittings, hoses, petcocks, bleeder tubes, and transfer tubes.

- The following components are considered normal wear items and are not covered after the first year of ownership: Belts, sheaves, flywheels, check valves, pressure switches, air unloaders, throttle controls, electric motors, brushes, regulators, o-rings, pressure gauges, tubing, piping, fittings, fasteners, wheels, quick couplers, gaskets, seals, air filter housings, piston rings, connecting rods, and piston seals.

- Labor, service calls, and travel charges, are not covered after the first year of ownership on stationary compressors (compressors without handles, or wheels). Repairs requiring overtime, weekend rates, or any other charges beyond the standard shop labor rate are not covered.
- Time required for orientation training for the service center to gain access to the product, or additional time due to inadequate egress.
- Damage caused by incorrect voltage, improperly wired, or failure to have a certified licensed electrician install the compressor, will render this warranty null and void.
- Damage caused from inadequate filter maintenance.
- Pump wear or valve damage caused by using oil not specified.
- Pump wear or damage caused by any oil contamination.
- Pump wear or valve damage caused by failure to follow proper maintenance guidelines.
- Operation below proper oil level or operation without oil.
- Gas Engines, if product is equipped with a gas engine, see engine manual for specific engine manufacturer's warranty coverage.

Parts purchased separately: The warranty for parts purchased separately such as: pumps, motors, etc., are as follows:

From Date of Purchase

- All single & two stage pumps 1 year
- Electric motors 90 days
- Universal motor/pump 30 days
- All other parts 30 days
- No return authorization will be issued for electrical components once items are installed.

How do You Get Service? In order to be eligible for service under this warranty you must be the original retail purchaser, and provide proof of purchase from one of the Company's dealers, distributors, or retail outlet stores. Portable compressors or components must be delivered, or shipped, to the nearest Authorized Service Center. All associated freight costs and travel charges must be borne by the consumer. Please call our toll free number 1-888-895-4549 for assistance.

THIS WARRANTY GIVES YOU SPECIFIC LEGAL RIGHTS, AND YOU MAY ALSO HAVE OTHER RIGHTS WHICH VARY FROM STATE TO STATE.

THE COMPANY MAKES NO OTHER WARRANTY OR REPRESENTATION OF ANY KIND WHATSOEVER, EXPRESSED OR IMPLIED, EXCEPT THAT OF TITLE. ALL IMPLIED WARRANTIES, INCLUDING ANY WARRANTY OF MERCHANTABILITY AND FITNESS FOR PARTICULAR PURPOSE ARE HEREBY DISCLAIMED. LIABILITY FOR CONSEQUENTIAL AND INCIDENTAL DAMAGES UNDER ANY AND ALL WARRANTIES, OTHER CONTRACTS, NEGLEGENCE, OR OTHER TORTS IS EXCLUDED TO THE EXTENT EXCLUSION IS PERMITTED BY LAW.

FREE WARNING LABEL REPLACEMENT: If your warning labels become illegible or are missing, call 1-888-895-4549 for a free replacement.

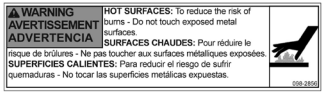





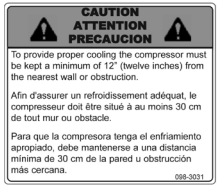

Troubleshooting Guide

This section provides a list of the more frequently encountered malfunctions, their causes and corrective actions. The operator or maintenance personnel can perform some corrective actions, and others may require the assistance of a qualified DEWALT technician or your dealer.

Air leaks 1
Air leaks in air tank or at air tank welds 2
Air leaks between head and valve plate.....3
Air leaks from safety valve.....4
Compressor is not supplying enough air to operate accessories 1, 5, 6, 7, 9, 10

Restricted air intake....9
Oil in discharge air....9, 19, 31
Knocking Noise....4, 10, 11, 12, 13, 14
Excessive belt wear....10, 11, 14, 15
Squealing sound....10
Moisture in pump crankcase....1, 3, 8, 17, 18, 19, 20, 21, 22
Excessive current draw....14, 23, 24
Compressor won't start in cold temperatures....17, 31, 32
Compressor stalls....25, 26, 27
Overheating....24, 30, 31

Troubleshooting Codes

CODE	POSSIBLE CAUSE	POSSIBLE SOLUTION
1	Fittings are not tight	Tighten fittings where air can be heard escaping. Check fittings with soapy water solution. DO NOT OVERTIGHTEN.
2	Defective air tank	Air tank must be replaced. Do not repair the leak. ⚠ ***WARNING:*** Risk of bursting. Do not drill into, weld or otherwise modify air tank or it will weaken. The air tank can rupture or explode.
3	Leaking seals	Contact a DEWALT factory service center or a DEWALT authorized service center.
4	Defective safety valve	Operate safety valve manually by pulling on ring. If valve still leaks, it must be replaced.
5	Prolonged excessive use of air	Decrease amount of air usage.

CODE	POSSIBLE CAUSE	POSSIBLE SOLUTION
6	Compressor is not large enough for accessory	Check the accessory air requirement. If it is higher than the SCFM or pressure supplied by your air compressor, a larger compressor is needed to operate accessory.
7	Hole in air hose	Check and replace air hose, if required.
8	Unit operating in damp or humid conditions	Move unit to a dry well ventilated area.
9	Restricted air intake filter	Clean or replace air intake filter.
10	Loose belt	Check belt tension, see **Adjusting Belt Tension** under *Maintenance.*
11	Loose pulley	Tighten pulley set screw, torque to 85-90 in.-lbs. (9.6–10.2 Nm).
12	Loose flywheel	Tighten flywheel screw, torque to 14–18 ft.-lbs. (20.0–24.4 Nm).
13	Carbon build-up in pump	Contact a DEWALT factory service center or a DEWALT authorized service center.
14	Belt to tight	Check belt tension, see **Adjusting Belt Tension** under *Maintenance.*
15	Pulley misalignment	See **Motor Pulley/Flywheel Alignment** under *Maintenance*.
16	Pump oil is low	Add synthetic blend, non-detergent air compressor oil to pump. See **Compressor Pump Oil** under *Maintenance.*
17	Detergent type oil being used in pump	Drain oil and refill pump with synthetic blend non-detergent air compressor oil.
18	Extremely light duty cycles	Run unit for longer duty cycles. It is recommended to run at high throttle 50-75% of the run time and idle for 25% of the run time.
19	Piston rings damaged or worn	Contact a DEWALT factory service center or a DEWALT authorized service center.

CODE	POSSIBLE CAUSE	POSSIBLE SOLUTION
20	Cylinder or piston damaged or worn	Contact a DEWALT factory service center or a DEWALT authorized service center.
21	Compressor cylinder finish worn	Contact a DEWALT factory service center or a DEWALT authorized service center.
22	Water in pump oil	Drain oil and refill pump with synthetic blend non-detergent air compressor oil.
23	Low voltage/motor overload	Check that power supply is adequate and that compressor is on a dedicated circuit. If using extension cord, try using without. If compressor is connected to a circut protected by a fuse, use dual element time delay fuses (Buss Fusetron type “T” only).
24	Restricted air passages	**Inspect and replace transfer tubes or check valve, as required.**
25	Low voltage motor	Furnish adequate powder.
26	Bad check valve	Replace check valve.
27	Seized pump	Contact a DEWALT factory service center or a DEWALT authorized service center.
28	Oil level too high	Reduce to proper level. See **Compressor Pump Oil** under *Maintenance.*
29	Poor ventilation	Relocate compressor to an area with cool, dry, well circulated air, at least 12 in. from nearest wall.
30	Dirty cooling surfaces	Clean all cooling surfaces thoroughly.
31	Too much back pressure in tank.	Open drain valve when starting motor.
32	Compressor too cold	Move compressor to a warmer location.

GLOSSARY

CFM: Cubic feet per minute.

SCFM: Standard cubic feet per minute; a unit of measure of air delivery.

PSI: Pounds per square inch; a unit of measure of pressure.

Cut-in pressure: Factory set low pressure point that starts the compressor to repressurize the tank to a higher pressure.

Cut-out pressure: Factory set high pressure point that stops the compressor from increasing the pressure in the tank above a certain level.

Well-ventilated: A means of providing fresh air in exchange for dangerous exhaust or vapors.

Dedicated circuit: An electrical circuit reserved for the exclusive use of the air compressor.

ASME: American Society of Mechanical Engineers. Indicates that the components are manufactured, tested and inspected to the specifications set by ASME.

CSA: Canadian Standards Association

Indicates that the products that have this marking have been manufactured, tested and inspected to standards that are set by CSA.

Canadian Standards Association (USA): Indicates that the products that have this marking have been manufactured, tested and inspected to standards that are set by CSA. These products also conform to U.L. standard 1450.

California Code: Unit may comply with California Code 462 (l) (2)/(M) (2). Specification/model label is on the side of the air tank on units that comply with California Code.

NOTES

Compresseur d'air

A. Filtre d'admission d'air de la pompe
B. Interrupteur Auto [AUTO(-)] / Off (ARRÉT(O)]
C. Manomètre du réservoir d'air
D. Sortie d'air
E. Soupape de sûreté
F. Soupape de purge du réservoir d'air
G. Jauge graduée de l'huile de la pompe/Bouchon de remplissage d'huile
H. Bouchon de vidange d'huile de la pompe
I. Clapet
J. Démarreur magnétique

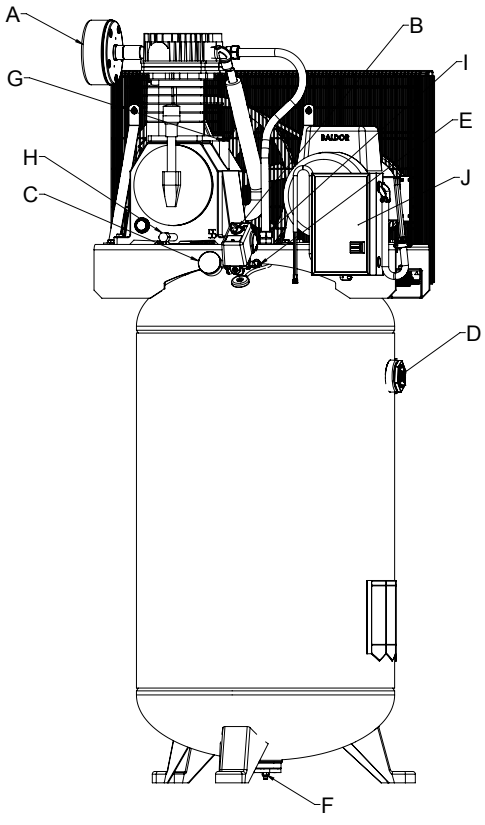

FIG. 1

Caractéristiques techniques de la pompe

Deux cylindres
Deux-étagée
Lubrifiée à l'huile
Carter en fonte et piston et culasse en
Poids : 62 kg (136 lb)
Capacité en huile : 1567 ml (53 onces)

Fiche technique

MODÈLE	**DXCMV7518075**
POIDS	283 kg (623 livres)
HAUTEUR	71"
LARGEUR	30.78 "
CAPACITÉ DU RÉSERVOIR D'AIR	302,8 liters (80 gallons)
ENV. PRESSION DE ÉCLENCHEMENT	200 psi

Surfaces chaudes

FIG. 2

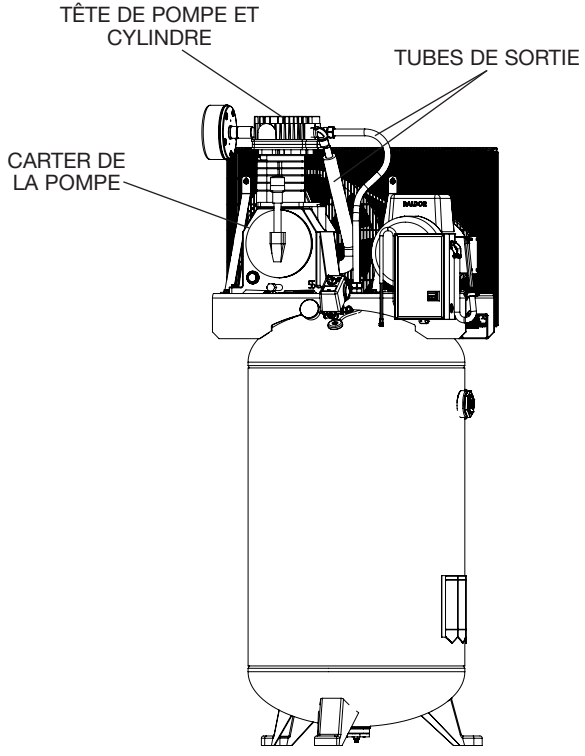

Définitions : lignes directrices en matière de sécurité

Les définitions ci-dessous décrivent le niveau de gravité pour chaque symbole. Veuillez lire le mode d'emploi et porter une attention particulière à ces symboles.

⚠***DANGER :*** *Indique une situation dangereuse imminente qui, si elle n'est pas évitée,* ***causera la mort ou des blessures graves.***

⚠***AVERTISSEMENT :*** *Indique une situation potentiellement dangereuse qui, si elle n'est pas évitée,* ***pourrait*** *se solder par un* ***décès ou des blessures graves****.*

⚠***ATTENTION :*** *Indique une situation potentiellement dangereuse qui, si elle n'est pas évitée* ***pourrait*** *se solder par* ***des blessures mineures ou modérées****.*

AVIS : Indique une pratique ne posant ***aucun risque de dommages corporels*** mais qui par contre, si rien n'est fait pour l'éviter, ***pourrait*** poser des ***risques de dommages matériels.***

POUR TOUTES QUESTIONS OU COMMENTAIRES RELATIFS(VES) À L'OUTIL OU À PROPOS DE TOUT AUTRE OUTIL DEWALT, COMPOSER SANS FRAIS LE : **1-888-895-4549**

Directives de sécurité importantes

⚠***AVERTISSEMENT :*** Ne pas utiliser l'appareil avant d'avoir lu le mode d'emploi, ainsi que l'intégralité des directives de sécurité, et d'entretien.

⚠***AVERTISSEMENT:*** ***CALIFORNIE PROPOSITION 65***
AVERTISSEMENT: Ce produit contient des produits chimiques, reconnus par l'État de Californie comme étant cancérigènes et pouvant entraîner des anomalies congénitales et d'autres dangers relatifs à la reproduction. ***Se laver les mains après toute manipulation.***

⚠***AVERTISSEMENT :*** Ce produit contient des produits chimiques reconnus par l'État de la Californie comme étant cancérigènes et pouvant entraîner des anomalies congénitales ou d'autres problèmes liés aux fonctions reproductrices. Se laver les mains après toute manipulation.

CONSERVER CES DIRECTIVES



⚠*DANGER : RISQUE D'EXPLOSION OU D'INCENDIE*

CE QUI PEUT SE PRODUIRE	COMMENT L'ÉVITER
• Il est normal que des contacts électriques dans le moteur et le manocontacteur fassent une étincelle.	• Faites toujours fonctionner le compresseur dans une zone bien aérée sans matière combustible, essence ou vapeur de solvant.
• Si une étincelle électrique provenant du compresseur entre en contact avec des vapeurs inflammables, elle peut s'enflammer et causer un incendie ou une explosion.	• Si vous aspergez des matériaux inflammables, placez le compresseur à au moins 6,1 m (20 pieds) de la zone pulvérisée. Il est possible que vous ayez besoin d'une longueur de tuyau additionnelle. • Entreposez les matières inflammables dans un endroit sécuritaire, éloigné du compresseur.
• Le fait de limiter les ouvertures d'aération de compresseur causera une importante surchauffe et pourrait causer un incendie.	• Ne jamais placer d'objets contre la pompe du compresseur ou sur celle-ci. • Faites fonctionner le compresseur dans un endroit aéré à au moins 30,5 cm (12 po) du mur ou de l'obstruction qui pourrait limiter le débit d'air frais dans les ouvertures d'aération. • Faites fonctionner le compresseur dans un endroit propre, sec et bien aéré. Ne pas utiliser l'appareil à l'intérieur ou dans un endroit exigu.
• Le fonctionnement de ce produit sans surveillance pourrait se solder par des blessures personnelles ou des dommages à la propriété. Afin de réduire le risque d'incendie, ne pas laisser le compresseur fonctionner sans surveillance.	• Être toujours présent lorsque le produit est en marche. • Toujours éteindre de tension principale sectionneur si non utilisé.



⚠DANGER : RISQUE REPIRATOIRE (ASPHYXIE)

CE QUI PEUT SE PRODUIRE	COMMENT L'ÉVITER
• Il est dangereux de respirer l'air comprimé sortant du compresseur. Le flux d'air peut contenir du monoxyde de carbone, des vapeurs toxiques ou des particules solides provenant du réservoir d'air. La respiration de ces contaminants peut causer de sérieuses blessures, voire la mort.	• Ne jamais utiliser l'air obtenu directement du compresseur pour l'alimentation en air destinée à la consommation humaine. Le compresseur n'est pas muni de filtres et d'équipement de sécurité en ligne qui conviennent à la consommation humaine.
• Une exposition aux produits chimiques présents dans la poussière générée par les activités de ponçage, sciage, meulage, perçage et autres, peut être nocive • Les matériaux vaporisés comme la peinture, les solvants de peinture, les décapants, les insecticides, les herbicides, pourraient contenir des vapeurs nocives et du poison.	• Travailler dans un endroit ayant une bonne aération transversale. Lire et respecter les directives en matière de sécurité imprimées sur l'étiquette ou les fiches signalétiques des matériaux qui sont pulvérisés. Toujours utiliser un équipement de sécurité homologué : une protection respiratoire conforme aux normes NIOSH/OSHA, ou un masque facial bien ajusté, conçus spécifiquement pour votre utilisation particulière.



⚠DANGER : RISQUE D'ÉCLATEMENT

Réservoir d'air comprimé : Le 26 février 2002, la U.S. Consumer Product Safety Commission américaine a publié la règle nº 02-108 portant sur la sécurité en matière de réservoir d'air comprimé des compresseurs :

Les réservoirs d'air comprimé des compresseurs n'ont pas une durée de vie illimitée. La durée de vie des réservoirs dépend de plusieurs facteurs, qui comprennent entre autres : les conditions d'utilisation, les conditions ambiantes, une installation adéquate, les modifications sur site, et le niveau de maintenance. L'effet exact que peut avoir ces facteurs sur la durée de vie des réservoirs d'air est difficilement prévisible.

Si les procédures adéquates de maintenance ne sont pas suivies, la corrosion sur la paroi interne du réservoir d'air comprimé peut faire que celui-ci éclate de façon inopinée laissant soudainement l'air pressurisé s'échapper avec force, posant ainsi des risques de dommages corporels à l'utilisateur.

Le réservoir d'air de votre compresseur doit être mis hors service à la fin de l'année mentionnée sur l'étiquette d'avertissement apposée sur le réservoir.

Les conditions suivantes peuvent amener la dégradation du réservoir d'air, et faire que ce dernier explose violemment :

CE QUI PEUT SE PRODUIRE	COMMENT L'ÉVITER
• L'eau condensée n'est pas correctement vidangée du réservoir d'air provoquant ainsi la formation de rouille et un amincissement du réservoir d'air en acier.	• Vidanger le réservoir d'air quotidiennement ou après chaque utilisation. Si le réservoir présente une fuite, le remplacer immédiatement par un nouveau réservoir d'air ou par un nouveau compresseur.
• Modifications apportées au réservoir d'air ou tentatives de réparation.	• Ne jamais percer un trou dans le réservoir d'air ou ses accessoires, y faire de la soudure ou y apporter quelque modification que ce soit. Ne jamais essayer de réparer un réservoir d'air endommagé ou avec des fuites. Le remplacer par un nouveau réservoir d'air.
• Des modifications non autorisées de la soupape de décompression, ou de tous autres composants qui régissent la pression du réservoir d'air.	• Le réservoir d'air a été conçu pour supporter des pressions spécifiques de fonctionnement. Ne faites jamais effectuer de réglages ou de substitutions de pièces en vue de modifier les pressions de fonctionnement réglées en usine.
Attachements et accessoires :	
• Lorsqu'on excède la pression nominale des outils pneumatiques, des pistolets pulvérisateurs, des accessoires à commande pneumatique, des pneus et d'autres dispositifs pneumatiques, on risque de les faire exploser ou de les projeter et ainsi entraîner des blessures graves.	• Respecter les recommandations du fabricant de l'équipement et ne jamais dépasser la pression nominale maximale permise des accessoires. Ne jamais utiliser le compresseur pour gonfler de petits objets à basse pression comme des jouets d'enfant, des ballons de football et de basketball, etc.
Pneus :	
• Des pneus surgonflés pourraient provoquer des blessures graves et des dommages à la propriété.	• Utiliser un manomètre pour vérifier la pression des pneus avant chaque utilisation et lors du gonflage; consulter le flanc de pneu pour obtenir la pression correcte. **REMARQUE :** Les réservoirs d'air comprimé, compresseurs et autres équipements similaires utilisés pour gonfler les pneus peuvent remplir ces derniers très rapidement. Régler le régulateur de pression d'air à une pression moindre que celle indiquée sur le pneu. Ajouter de l'air par petite quantité et utiliser fréquemment le manomètre pour empêcher un surgonflage.



⚠*DANGER : RISQUE DE BLESSURES OU DE DOMMAGES À LA PROPRIÉTÉ LORS DU TRANSPORT OU DU RANGEMENT*

CE QUI PEUT SE PRODUIRE	COMMENT L'ÉVITER
• L'huile peut fuire ou se déverser. Cela pourrait se solder par un incendie ou un danger d'inhalation; des blessures graves ou un décès. Les fuites d'huile endommageront le tapis, la peinture ou toutes autres surfaces de véhicules ou de remorques.	• Toujours installer le compresseur sur un revêtement protecteur lors du transport pour protéger le véhicule de tous dommages associés aux fuites. Retirer immédiatement le compresseur du véhicule dès l'arrivée à destination. Toujours tenir le compresseur à niveau et ne jamais le déposer sur son côté.



⚠*AVERTISSEMENT : RISQUE PROVENANT DES OBJETS PROJETÉS EN L'AIR*

CE QUI PEUT SE PRODUIRE	COMMENT L'ÉVITER
• Le flux d'air comprimé peut endommager les tissus mous de la peau exposée et peut projeter la poussière, des fragments, des particules détachées et des petits objets à haute vitesse, ce qui entraînerait des dommages et des blessures personnelles.	• Toujours utiliser de l'équipement de sécurité homologué : protection oculaire conforme à la norme ANSI Z87.1 (CAN/CSA Z94.3) munie d'écrans latéraux lors de l'utilisation du compresseur. • Ne jamais pointer une buse ou un pulvérisateur vers une partie du corps ou vers d'autres personnes ou des animaux. • Toujours mettre le compresseur hors tension et purger la pression du tuyau à air et du réservoir d'air avant d'effectuer l'entretien, de fixer des outils ou des accessoires.



⚠*AVERTISSEMENT : ATTENTION SURFACES CHAUDES*

CE QUI PEUT SE PRODUIRE	COMMENT L'ÉVITER
• Toucher à du métal exposé comme la tête du compresseur ou de sortie, peut se solder en de sérieuses brûlures.	• Ne jamais toucher à des pièces métalliques exposées sur le compresseur pendant ou immédiatement après son utilisation. Le compresseur restera chaud pendant plusieurs minutes après son utilisation. • Ne pas toucher ni effectuer des réparations aux coiffes de protection avant que l'appareil n'ait refroidi.



⚠*AVERTISSEMENT : RISQUE DE CHOC ÉLECTRIQUE*

CE QUI PEUT SE PRODUIRE	COMMENT L'ÉVITER
• Votre compresseur d'air est alimenté à l'électricité. Tout comme n'importe quel autre dispositif alimenté de façon électrique, s'il n'est pas utilisé correctement, il peut causer un choc électrique.	• Ne faites jamais fonctionner le compresseur à l'extérieur lorsqu'il pleut ou dans des conditions humides. • Ne faites jamais fonctionner le compresseur avec les couvercles de protection enlevés ou endommagés.
• Les tentatives de réparation par un personnel non qualifié peuvent résulter en de graves blessures, voire la mort par électrocution.	• Tout câblage électrique ou toute réparation nécessaire pour ce produit doit être pris en charge par un centre de réparation en usine autorisé DEWALT ou un centre de réparation DEWALT conformément aux codes électriques nationaux et locaux.
• **Mise à la terre électrique :** le fait de ne pas faire une mise à la terre adéquate de ce produit pourrait résulter en des blessures graves voire la mort par électrocution. Consulter **les directives relatives à la mise à la terre** sous *Installation.*	• Assurez-vous que le circuit électrique auquel le compresseur est branché fournit une mise à la terre électrique adéquate, une tension appropriée et une bonne protection des fusibles.



⚠AVERTISSEMENT : RISQUE ASSOCIÉ À UTILISATION DANGEREUSE

CE QUI PEUT SE PRODUIRE	COMMENT L'ÉVITER
• Une utilisation dangereuse de votre compresseur d'air pourrait provoquer de graves blessures, voire votre décès ou celle d'autres personnes.	• Revoir et comprendre toutes les directives et les avertissements contenus dans le présent mode d'emploi. • Se familiariser avec le fonctionnement et les commandes du compresseur d'air. • Dégager la zone de travail de toutes personnes, animaux et obstacles. • Tenir les enfants hors de portée du compresseur d'air en tout temps. • Ne pas utiliser le produit en cas de fatigue ou sous l'emprise d'alcool ou de drogues. Rester vigilant en tout temps. • Ne jamais rendre inopérant les fonctionnalités de sécurité du produit. • Installer un extincteur dans la zone de travail. • Ne pas utiliser l'appareil lorsqu'il manque des pièces ou que des pièces sont brisées ou non autorisées. • Ne jamais se tenir debout sur le compresseur.



⚠AVERTISSEMENT : RISQUE ASSOCIÉ AUX PIÈCES MOBILES

CE QUI PEUT SE PRODUIRE	COMMENT L'ÉVITER
• Les pièces mobiles comme une poulie, un volant ou une courroie peuvent provoquer de graves blessures si elles entrent en contact avec vous ou vos vêtements.	• Ne jamais utiliser le compresseur si les protecteurs ou les couvercles sont endommagés ou retirés. • Garder les cheveux, les vêtements et les gants à l'écart des pièces mobiles. Les vêtements amples, bijoux ou cheveux longs peuvent s'enchevêtrer dans les pièces mobiles. • S'éloigner des évents car ces derniers pourraient camoufler des pièces mobiles.
• Utiliser le compresseur avec des pièces endommagées ou manquantes ou le réparer sans coiffes de protection risque de vous exposer à des pièces mobiles et peut se solder par de graves blessures.	• Toutes les réparations requises pour ce produit devraient être effectuées par un centre de réparation de l'usine DEWALT ou un centre de réparation agréé DEWALT.



⚠AVERTISSEMENT : RISQUE DE BLESSURE EN SOULEVANT LE PRODUIT

CE QUI PEUT SE PRODUIRE	COMMENT L'ÉVITER
• Soulever un objet trop lourd peut se solder par de graves blessures.	• Le compresseur est trop lourd pour être soulevé par une seule personne. Demander de l'aide avant de le soulever.



⚠ATTENTION : RISQUES CAUSÉS PAR LE BRUIT

CE QUI PEUT SE PRODUIRE	COMMENT L'ÉVITER
• Dans certaines conditions et selon la durée d'utilisation, le bruit provoqué par ce produit peut contribuer à une perte auditive.	• Toujours utiliser un équipement de sécurité homologué : protection auditive conforme à la norme ANSI S12.6 (S3.19).

CONSERVER CES CONSIGNES POUR UTILISATION ULTÉRIEURE

FAMILIARISEZ-VOUS AVEC VOTRE COMPRESSEUR D'AIR

LISEZ CE GUIDE DE L'UTILISATEUR ET TOUTES LES MESURES DE SÉCURITÉ AVANT D'UTILISER CET APPAREIL. Comparez les illustrations à votre appareil pour vous familiariser avec l'emplacement des commandes et boutons de réglage. Conservez ce guide pour références ultérieures.

CARACTÉRISTIQUES (Fig. 1)

INTERRUPTEUR AUTO (-)/ARRÊT (OFF) (O)

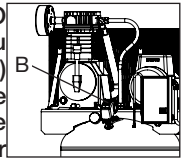

Mettre cet interrupteur (B) sur la position AUTO (-) pour avoir une alimentation automatique au manocontacteur et sur la position ARRÊT (OFF) (O) pour la mise hors tension à la fin de chaque utilisation. **REMARQUE :** Avant de retirer ou de replacer le capot du manocontacteur, s'assurer de TOUJOURS mettre l'interrupteur (B) à la position d'ARRÊT (OFF) (O).

MANOCONTACTEUR

Le manocontacteur (B) démarre automatiquement le moteur lorsque la pression du réservoir d'air chute sous la pression **d'enclenchement** réglée en usine. Il arrête le moteur lorsque la pression du réservoir d'air atteint la pression de **déclenchement** réglée en usine.

SOUPAPE DE SÛRETÉ

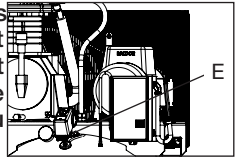

La soupape (E) est conçue pour prévenir des défaillances système en décompressant celui-ci lorsque le compresseur d'air atteint un niveau préétabli. La soupape est réglée par le fabricant et ne doit pas être retirée ou modifiée de quelque manière que ce soit.

CLAPET

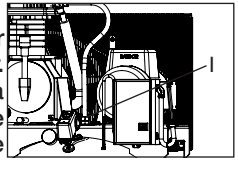

Lorsque le compresseur d'air fonctionne, le clapet (I) est ouvert, ce qui permet à l'air comprimé d'entrer dans le réservoir d'air. Lorsque le compresseur d'air atteint la pression de déclenchement, le clapet se ferme, ce qui permet à la pression d'air de

rester dans le réservoir d'air.

FILTRE D'ADMISSION D'AIR

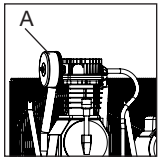

Le filtre (A) sert à purifier l'air qui ente dans la pompe. Pour que la pompe reçoive un flux d'air constant propre, froid et sec, le filtre doit toujours être propre et l'entrée d'air doit être exempte d'obstructions.

ROBINET DE PURGE

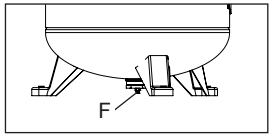

Le robinet de purge (F) se trouve à la base du réservoir d'air et est utilisé pour vidanger la condensation à la fin de chaque utilisation. Consulter le chapitre **Vidange du réservoir** sous *Entretien*

MANOMÈTRE DE RÉSERVOIR

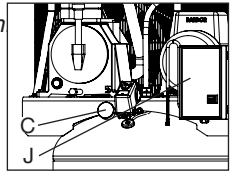

Le manomètre de réservoir (C) indique la pression d'air de réserve dans le réservoir.

DÉMARREUR MAGNÉTIQUE (J) (NÉCESSITENT)

REMARQUE : Ces compresseurs nécessitent l'installation d'un démarreur magnétique.

Les démarreurs magnétiques qui ne sonte pas montés sur le compresseur à l'usine peuvent être montés sur le mur si vous le désirez. Montez-les aussi près que possible du compresseur. Choisissez le calibre des fils, protégez-les par un tube isolant et prévoyez une protection du cir uit de câblage conformément au Code Électrique National.

ROBINET À SOUPAPE / SORTIE DE DÉCHARGE D'AIR:
(vendu séparément, non illustré) Ouvre et ferme le circuit de distribution d'air du compresseur. Se reporter à la rubrique **Système de distribution d'air** sous *Installation.*

RÉGULATEUR *(vendu séparément, pas illustré)* : Pour la plupart des applications, nous recommandons l'utilisation d'un régulateur de pression d'air ou d'un épurateur d'air séparé qui relie les fonctions de réglage de l'air et(ou) d'enlèvement de l'humidité et des saletés. Se reporter à la rubrique **Système de distribution d'air** sous *Installation*.

POMPE DE COMPRESSEUR D'AIR

La pompe compresse l'air dans le réservoir d'air. L'air de travail n'est pas disponible avant que le compresseur ait augmenté la pression du réservoir d'air au-dessus de ce qui est requis à la sortie d'air.

INTERRUPTEUR DE RÉENCLENCHEMENT DU DÉMARREUR MAGNÉTIQUE

Si le moteur s'arrête à la suite d'une surcharge, attendez entre 10 et 15 minutes que le moteur ait le temps de refroidir.
Redémarrage:

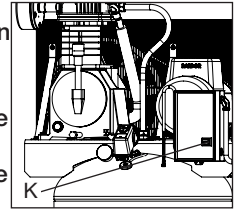

1. Mettre le levier Auto/Off en positon «OFF» (O).
2. Laisser le moteur refroidir.
3. Enfoncez le bouton (K) de sur le démarreur magnétique .
4. Mettre le levier Auto/Off en position de «AUTO»(-).

INSTALLATION

Assemblage (Fig. 1)

Sortez le compresseur d'airde sa boîte. Inspectez–le pour vous

assurer qu'il n'est pas endommagé. S'i a été endommagé pendant le transport, référez–vous à l'étiquette de transport et déclarez les dommages aux transporteur. Faites cette démarche immédiatement étant donné les délais limites des demandes d'indemnisation.

Le carton doit contenir:

- **compresseur d'air**
- **manuel de l'opérateur et manuel de pièces**

Vérifiez l'étiquette du numéro de série du compresseur pour vous assurer qu'il s'agit bien du modèle commandé et que la pression nominale est conforme à l'utilisation prévue.

RACCORDEMENT DES TUYAUX

⚠AVERTISSEMENT : *Risque d'utilisation dangereuse. Saisir fermement le tuyau en main lors du raccordement ou de la déconnexion pour empêcher un à-coup du tuyau.*

1. S'assurer que le manomètre régulé indique 0 psi.
2. Enrouler un ruban d'étanchéité sur le filetage de tuyau.
3. Raccorder le ou le tuyau à la ou aux sortie d'air (D).

IMPORTANT : *Ne pas assembler de distributeurs directement sur la ou le sortie d'air (D).*

REMARQUE : *La fixation de pièces à dégagement rapide aux sortie d'air et de bouchons à dégagement rapide aux embouts de tuyau facilite la connexion et la déconnexion des tuyau. Les pièces et les embouts à dégagement rapide sont disponibles auprès de votre distributeur ou centre de réparation agréé régional.*

DÉCONNEXION DES TUYAUX

⚠AVERTISSEMENT : *Risque d'utilisation dangereuse. Saisir fermement le tuyau en main lors du raccordement ou de la déconnexion pour empêcher un à-coup du tuyau.*

1. S'assurer que le manomètre régulé indique 0 psi.
2. Retirer le ou les tuyau de la ou de sortie d'air (D).

Lubrification et huile

COMPRESSEUR D'AIR

Le fabricant a fait le plein d'huile de pompe **EN** usine. Vérifier le niveau d'huile de la pompe avant de l'utiliser. Consulter la rubrique **Huile de la pompe du compresseur** sous *Entretien.*

Compatibilité

Les outils pneumatiques et les accessoires utilisés avec le compresseur doivent être compatibles avec des produits dérivés du pétrole. En cas d'incompatibilité probable avec des dérivés du pétrole, utiliser un filtre de canalisation d'air pour retirer l'humidité et les vapeurs d'huile du compresseur d'air.

REMARQUE : Toujours utiliser un filtre de canalisation d'air pour retirer l'humidité et les vapeurs d'huile lors de la pulvérisation de peinture.

Emplacement

- Placez le compresseur d'air dans un endroit propre, sec et bien ventilé.
- Le compresseur d'air devrait être placé à au moins 30,5 cm (12 po) de distance d'un mur ou d'autres obstructions qui pourraient nuire au débit d'air.
- Le compresseur d'air doit être situé aussi près de la source d'alimentation électrique principale que possible pour éviter l'utilisation de câbles électriques trop longs. **REMARQUE :** Les câbles électriques trop longs peuvent entraîner une perte de puissance au moteur.
- Le filtre à air doit être propre et sans obstructions qui pourraient réduire le débit d'air au compresseur d'air.

Environnements frais

Dans les environnements souvent frais, il y a risque de formation d'hu-

midité dans la pompe et de boue dans l'huile. Ceux-ci provoquent une usure prématurée des pièces mobiles. Un excès d'humidité survient principalement dans les environnements non chauffés où l'appareil est soumis à de grandes variations thermiques. On reconnaît l'humidité excessive en présence de deux signes : la formation condensation externe sur la pompe lorsqu'elle refroidit et de l'apparence « laiteuse » de l'huile du compresseur. Il est possible d'empêcher la formation d'humidité dans la pompe en augmentant la circulation d'air ou en utilisant le compresseur d'air plus longtemps.

REMARQUES À PROPOS DU BRUIT

Consulter les organismes de règlementation de votre région pour connaître les niveaux de bruit tolérés Pour réduire le bruit excessif, utiliser un montage antivibratile ou des atténuateurs sonores. Repositionner l'appareil ou construire une enceinte close ou des murs déflecteurs. Communiquer avec un centre de réparation DEWALT ou composer le 1-888-895-4549 pour obtenir de l'aide.

Ancrage du compresseur d'air

⚠ AVERTISSEMENT : Risque d'éclatement. Un niveau de vibrations excessif peut affaiblir le réservoir d'air et causer une explosion. Le compresseur doit être fixé de façon appropriée.

Le compresseur à air DOIT être ancré à une surface plane en béton solide. Utilisez des tirefonds de 3/8 po, plots antivibratiles, et ancres pour béton. Si nécessaire, veuillez consulter un entrepreneur agréé pour ancrer le compresseur.

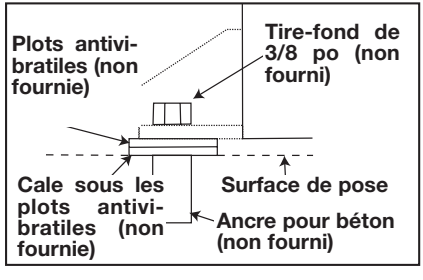

1. Installez le compresseur à air sur une surface plane en béton solide. Assurez-vous que le béton est en bonne condition et ne comporte ni fentes ni dommages.
2. Marquez la surface en utilisant les trous dans les pattes du compresseur comme gabarit.
3. Percez des trous dans la surface de pose. Insérez-y les ancres pour béton.
4. Alignez les trous dans la surface avec les trous dans les pattes du compresseur d'air.
5. Placez les plots antivibratiles (non fournies) entre le sol et les pieds du compresseur, comme illustré. Si nécessaire, utilisez des cales pour mettre l'appareil de niveau.
6. Insérez les tirefonds de 3/8 po dans les pieds du compresseur, les plots antivibratiles puis dans les ancrages.
7. Serrez les tire-fond de 3/8 po à un couple de 9,5-13,5 Nm (7-10 pi-lb).

Directives de câblage

⚠ AVERTISSEMENT : *Une mauvaise connexion électrique de ce produit pourrait annuler la garantie et votre assurance contre les incendies. Faire câbler le circuit par un professionnel, comme un électricien agréé, familier avec le code électrique national actuel, ainsi qu'avec tout autre code électrique local en vigueur.*

⚠ AVERTISSEMENT : *Risque de chocs électriques. Une mise à la terre électrique inappropriée peut causer des chocs électriques. Le câblage devrait être effectué par un électricien qualifié.*

L'électricien qualifié doit savoir ce qui suit avant de commencer le câblage :

1. Si l'ampérage de la boîte de distribution électrique est suffisant. Voir le *Spécifications* du guide des pièces pour obtenir ces renseignements.
2. Si les câbles d'alimentation électriques ont les mêmes caractéristiques électriques (tension, cycle, phase) que le moteur. Voir la plaque signalétique située sur la surface latérale du moteur pour obtenir ces renseignements.

REMARQUE : *Le câblage doit être de la même tension que celle indiqué sur la plaque signalétique du moteur, plus ou moins 10%. Consultez les codes locaux pour connaître les calibres de fils recommandés, la dimension des fils et la longueur maximum des fils. Des fils de dimensions trop petites créent une intensité trop élevée et une surchauffe du moteur.*

⚠AVERTISSEMENT : *Le câblage électrique doit être éloigné des surfaces chaudes, telles que le collecteur, les tubes de sortie*

Directives de mise à la terre

Ce produit devrait être connecté à un système de câblage métallique permanent d'une borne ou d'un fil conducteur de mise à la terre du produit.

Sectionneru de tension principale

Installez un sectionneur de tension principale dans la conduite située entre le panneau et le compresseur. Le sectionneur doit être installé près du compresseur par commodité et sécurité. Lorsqu'il est enclenché, le compresseur se met en marche et s'arrête automatiquement selon l'impulsion de commande fournie par l'interrupteur de pression.

Système de distribution d'air

⚠AVERTISSEMENT : Risque d'éclatement. Les tuyaux en plastique ou en CPV ne sont pas conçus pour l'utilisation avec un compresseur d'air. Quoi que soit la pression nominale indiquée, les tuyaux en plastique peuvent éclater sous la pression de l'air. N'utilisez que des tuyaux en métal pour les conduites de distribution d'air.

INSTALLATION ET DÉCONNEXION DES TUYAUX

⚠AVERTISSEMENT : *Risque d'utilisation dangereuse. Saisir fermement le tuyau en main lors du raccordement ou de la déconnexion pour empêcher un à-coup du tuyau. S'assurer que le manomètre régulé indique 0 psi.*

L'illustration ci-dessous représente un système de distribution d'air typique. Voici des conseils à considérer lorsque vous montez le système de distribution d'air du compresseur d'air.

REMARQUE : L'air comprimé des compresseurs d'air graissés à l'huile contiendra de la condensation d'eau et des vapeurs d'huiles. Des drains, purgeurs et filtres seront nécessaires pour fournir de l'air sans vapeurs d'eau ou d'huile pour tout vaporisateur, outil et accessoire pneumatiques requérant de l'air filtré. Lire systématiquement les instructions relatives aux outils et accessoires pneumatiques utilisés.

- Utilisez des tuyaux qui sont de la même dimension que l'orifice de sortie du réservoir d'air. Des tuyaux trop petits réduisent le débit d'air.
- Si les tuyaux sont d'une longueur supérieure à 30,5 m (100 pieds), utilisez la dimension plus large suivante.
- Enterrez les conduites en dessous de la limite de gel et évitez des pochettes où l'eau de condensation peut s'accumuler et geler. Appliquez la pression avant de couvrir les conduites afin

de s'assurer qu'il n'y a pas de fuites aux connexions des tuyaux.

- Il est recommandé d’installer un couplage flexible entre le robinet à soupape/la sortie de décharge d’air et la ligne principale de distribution d’air pour accommoder toute vibration.
- Nous recommandons l'utilisation d'un régulateur supplémentaire pour contrôler la pression d'air. La pression d'air du réservoir est normalement trop élevée pour alimenter des outils pneumatiques particuliers.
- NE PAS installer de lubrificateurs entre le réservoir et tout vaporisateur, outil ou accessoire pneumatique requérant de l’air filtré exempt d’huile.
- Vidanger quotidiennement tout purgeur, filtre et tuyau de saletés.

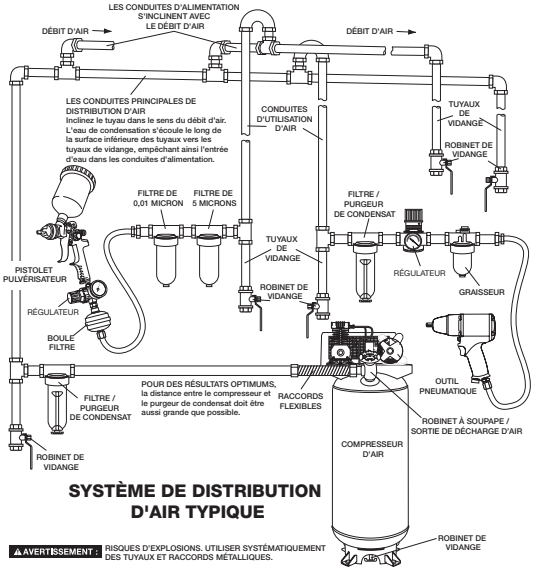

SYSTÈME DE DISTRIBUTION D'AIR TYPIQUE

Utilisation de l’appareil (Fig. 3)

Arrêt de l’appareil

Réglez le levier marche/automatique/arrêt Auto/Off à la position d’arrêt « Off ».

Avant le démarrage

⚠AVERTISSEMENT : *Ne pas utiliser cet appareil avant d’avoir lu et compris le mode d’emploi ainsi que l’intégralité des directives*

de sécurité, d'utilisation et d'entretien.

Procédures de rodage

AVIS : *Risque de dommages à la propriété. Le compresseur d'air peut subir d'importants dom-mages si les procédures de rodage ne sont pas suivies à la lettre.*

Cette procédure doit être exécutée avant d'utiliser le compresseur d'air pour la première fois et après le remplacement de la soupape de retenue ou de la pompe complète du compresseur.

1. Assurez-vous que le levier marche/automatique/arrêt Auto/Off est en position d'arrêt « Off ».
2. Vérifiez le niveau d'huile dans la pompe. Pour les instructions, consultez les paragraphes **Huile** dans la section intitulée Entretien.
3. Vérifiez tout le câblage. Assurez-vous que les fils sont bien fixés à toutes les connexions à bornes. Assurez-vous que tous les contacts se déplacent librement et qu'ils ne sont pas obstrués.
4. Ouvrez complètement le robinet de purge pour éliminer l'air et empêcher toute accumulation de pression d'air dans le réservoir d'air au cours de la période de rodage.
5. Placez le levier Auto/Off à la position « Auto ». Le compresseur se mettra en marche.
6. Faire fonctionner le compresseur pendant 30 minutes. Assurez-vous que le robinet de purge et toutes les conduites d'air sont ouverts pour qu'il y ait un minimum d'accumulation de pression d'air dans le réservoir.

REMARQUE : *Si après 30 minutes l'appareil ne fonctionne pas correctement, ARRETEZ-LE IMMÉDIATEMENT et contactez le service après-vente.*

7. Assurez-vous qu'il n'y a pas de fuites d'air aux raccords des conduites d'air ni aux connexions/tuyaux en y appliquant une solution savonneuse. Corrigez tout problème, s'il y a lieu. **REMARQUE:** Des fuites mineures peuvent forcer le compresseur d'air à travailler trop fort, entraînant ainsi une panne prématurée ou un rendement médiocre.
8. Vérifiez s'il y a des vibrations excessives. Réglez la hauteur des pieds du compresseur ou ajoutez-y des cales au besoin.
9. Au bout de 30 minutes, Placez le levier Auto/Off à la position « Off ».
10. Fermez le robinet de vidange en le tournant en sens horaire.
11. Déplacez l'interrupteur Auto/Off à la position de « Auto ». Le récepteur d'air se remplira jusqu'à ce que l'appareil atteigne la pression « de rupture » et le moteur s'arrêtera ensuite.

Le compresseur d'air est maintenant prêt pour l'utilisation.

Avant chaque mise en marche

1. Placez le levier Auto/Off à la position « Off ».
2. Fermez le robinet à soupape/la sortie de décharge d'air.
3. Vérifiez visuellement qu'il n'y a aucune fuite au niveau des conduites et raccords.
4. Vérifiez la soupape de sûreté. Se reporter à la rubrique **Vérification de la soupape de sûreté** sous Entretien.
5. Raccordez le boyau et les accessoires.

⚠AVERTISSEMENT : *Risque d'utilisation dangereuse. Saisir fermement le tuyau en main lors du raccordement ou de la déconnexion pour empêcher un à-coup du tuyau.*

⚠AVERTISSEMENT : *Risque d'utilisation dangereuse. N'utilisez pas les accessoires endommagés ou portés.*

REMARQUE : *Un régulateur DOIT être installé lorsqu'on utilise des accessoires conçus pour une pression inférieure à 135 psi.*

REMARQUE : *Le boyau ou l'accessoire doit être muni d'une fiche à connexion rapide si la sortie d'air est équipée d'une douille à connexion rapide.*

⚠***AVERTISSEMENT :*** *Risque d'éclatement. Une pression d'air trop élevée conduit à un risque dangereux d'éclatement. Vérifiez la pression nominale maximum du fabricant pour tous les outils pneumatiques et accessoires utilisés. La pression de sortie du régulateur ne doit jamais excéder la pression nominale maximum.*

⚠***ATTENTION :*** *Risque d'utilisation dangereuse. L'air comprimé de l'appareil pourrait contenir de l'eau condensée et des brumes d'huile. Ne pas vaporiser de l'air non filtré sur un article que l'humidité pourrait endommager. Certains outils ou dispositifs pneumatiques pourraient requérir de l'air filtré. Lire les directives pour l'outil ou le dispositif pneumatique.*

Mise en marche

1. Placez le levier Auto/Off à la position « Auto » et attendez jusqu'à ce que la pression augmente. Le moteur s'arrêtera lorsque la pression dans le réservoir atteint la «pression de rupture».
2. Lorsque la pression du réservoir atteint la pression de « rupture », ouvrir le robinet à soupape/sortie de décharge d'air.

⚠***AVERTISSEMENT :*** *Risque d'éclatement. Si n'importe quel bruit ou vibration peu commun est noté, arrêtez le compresseur immédiatement et faites-vérifier le par un technicien qualifié de service.*

Le compresseur d'air est maintenant prêt pour l'utilisation.

Arrêt (Fig. 1)

1. Mettre l'interrupteur Auto/Arrêt (L) en position d'ARRÊT.

REMARQUE : Si l'utilisation du compresseur est terminée, suivre les étapes 2 à 6.

2. Retirer le tuyau et l'accessoire.

⚠***AVERTISSEMENT :*** *Risque d'utilisation dangereuse. Saisir fermement le tuyau en main lors du raccordement ou de la déconnexion pour empêcher un à-coup du tuyau.*

3. Purger le réservoir d'air, consulter la rubrique **Purger le réservoir d'air** sous *Entretien*. S'assurer que le manomètre du réservoir d'air affiche 0 psi.

⚠***AVERTISSEMENT :*** *Risque d'éclatement. Purger le réservoir d'air quotidiennement. L'eau se condensera dans le réservoir d'air. Si l'eau n'est pas vidangée, elle corrodera et affaiblira le réservoir d'air, provoquant ainsi un risque de rupture du réservoir d'air.*

4. Laisser refroidir le compresseur.
5. Nettoyer le compresseur d'air avec un chiffon et le ranger dans un endroit sûr sans

FIG. 3

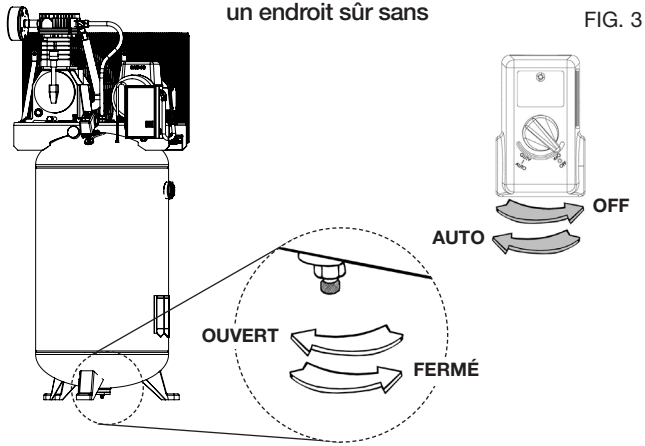

risque de gel.

Programme d'entretien

Procédure	Quotidienne	Hebdomadaire	Mensuelle	1 an ou 200 heures	Se reporter à l'étiquette d'avertissement sur le réservoir
Vérification de la soupape de sûreté	X				
Inspecter le filtre à air		X+			
Vidange du réservoir d'air	X				
Vérification du niveau d'huile de la pompe	X				
Vidange de l'huile de la pompe				X**+	
Inspection de fuite d'huile	X				
Inspection de la courroie d'entraînement	X				
Vérification de la tension de la courroie d'entraînement			X		
Vérification de l'alignement de la poulie/volant				X	
Recherche de bruits ou de vibrations inhabituels	X				
Vérification des fuites d'air	X*				
Nettoyage de la partie externe du compresseur		X			
Mettre le réservoir hors service					X++

* Pour trouver des fuites d'air, appliquer une solution d'eau savonneuse autour des joints. Alors que le compresseur développe la pression et que l'accumulation de pression cesse, rechercher toute trace de bulles d'air.

** Veuillez vidanger l'huile de la pompe après les 20 premières heures de fonctionnement. Par la suite, vidanger l'huile à tous les 200 heures de fonctionnement ou une fois l'an selon la première éventualité et utiliser synthétique mélangée non détergente pour compresseur d'air Huile.

\+ Vidange plus fréquente sous conditions poussiéreuses ou humides

++ Pour plus d'informations, composer le 1-888-895-4549

⚠AVERTISSEMENT : *Risque d'utilisation dangereuse. L'appareil commence automatiquement à fonctionner lorsqu'il est mis en marche. Lors de l'entretien, vous pourriez vous exposer à des sources de tension, d'air comprimé ou à des pièces en mouvement. Des blessures pourraient ainsi survenir. Avant de faire tout entretien ou toute réparation, débranchez la source d'alimentation du compresseur et laissez s'échapper toute la pression d'air.*

Pour assurer au compresseur d'air une opération efficace et une durée de vie plus longue, un horaire d'entretien périodique devrait être élaboré et suivi. L'horaire d'entretien périodique suivant s'applique à un appareil dans des conditions normales d'utilisation et étant utilisé quotidiennement. Au besoin, cet horaire peut être modifié pour convenir aux conditions d'utilisation de votre compresseur. Ces modifications dépendront du nombre d'heures d'opération et de l'environnement de travail. Les compresseurs placés dans des environnements très sales et(ou) très hostiles exigeront que toutes les vérifications d'entretien soient effectuées plus fréquemment.

REMARQUE : *Pour voir l'emplacement des commandes, voir la section Utilisation.*

Vérification de la soupape de sûreté (fig. 1)

⚠***AVERTISSEMENT :*** *Surfaces chaudes. Risque de brûlure. Le la tête de pompe et les pièces contiguës sont très chaudes – ne pas les toucher (consulter la rubrique Surfaces chaudes de la figure 2). Laisser refroidir le compresseur avant d'effectuer des réparations sur l'appareil.*

⚠***AVERTISSEMENT :*** *Risque d'éclatement. Si la soupape de sûreté ne fonctionne pas correctement, il peut se produire une surpressurisation, causant ainsi la rupture du réservoir d'air ou une explosion.*

⚠***AVERTISSEMENT :*** *Risque provenant des objets projetés en l'air. Toujours utiliser de l'équipement de sécurité homologué : protection oculaire conforme à la norme ANSI Z87.1 (CAN/CSA Z94.3) munie d'écrans latéraux lors.*

Avant de mettre en marche le compresseur, tirez sur la bague de la soupape de sûreté pour vous assurer que la soupape fonctionne librement. Si la soupape est coincée ou ne fonctionne pas bien, il faut la remplacer par une soupape du même type.

Vérification des éléments du filtre d'air

⚠***AVERTISSEMENT :*** *Surfaces chaudes. Risque de brûlure. Le postrefroidisseur, la tête de pompe et les pièces contiguës sont très chaudes – ne pas les toucher (consulter la rubrique Surfaces chaudes de la figure 2). Laisser refroidir le compresseur avant d'effectuer des réparations sur l'appareil.*

Un filtre à air encrassé ne permettra pas au compresseur de fonctionner à sa pleine capacité. Assurez-vous que le filtre à air est propre en tout temps.

1. Assurez-vous que le levier marche/automatique/arrêt Auto/Off est en position d'arrêt « Off ».
2. Laisser refroidir l'appareil..
3. Retirer l'écrou à oreilles (L).
4. Retirer la protection extérieure en métal (M).
5. Vérifier la cartouche filtrante (N) et la remplacer si elle est sale ou remplie de peinture.
6. Replacer la protection extérieure en métal sur la cartouche filtrante.
7. Fixer à l'aide de l'écrou à oreilles.

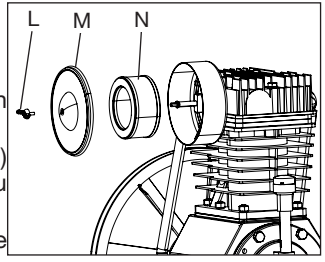

⚠***ATTENTION :*** Risque d'utilisation dangereuse. Ne pas utiliser sans le filtre d'admission d'air.

Vidange du réservoir d'air (fig. 3)

⚠***AVERTISSEMENT :*** *Risque d'utilisation dangereuse. Risque associé au bruit. Les réservoirs d'air contiennent de l'air sous haute pression. Éloigner le visage [ANSI Z87.1 (CAN/CSA Z94.3)] et toutes autres parties du corps de l'orifice de vidange. Porter des lunettes de sécurité lors de la vidange car il y a risque de projection de débris au visage.*

⚠***AVERTISSEMENT :*** *Risque associé au bruit. Utiliser une protection auditive [ANSI S12.6 (S3.19)] car le flux d'air sortant est strident en cours de vidange.*

REMARQUE : *Tous les systèmes de compression d'air génèrent des condensats qui s'accumulent à un point de vidange (par ex., réservoir, filtre, dispositifs de postrefroidissement ou sécheur). Le condensat contient de l'huile lubrifiante ou des substances contrôlées, ou les deux, et doivent être éliminés conformément aux lois et règlements*

municipaux, provinciaux, territoriaux et fédéraux.

1. Placez le levier Auto/Off à la position « Off » et débranchez l'unité.
2. Tirez l'anneau de la soupape de sûreté pour permettre à l'air de purger du réservoir jusqu'à ce que la pression dans le réservoir se situe à environ 20 lb/po^2. Relâchez l'anneau de la soupape de sûreté.
3. Vidangez l'eau du réservoir en ouvrant le robinet de vidange. (Tournez dans le sens contraire des aiguilles d'une montre) situé en bas du réservoir.

⚠***AVERTISSEMENT :*** *Risque d'éclatement. L'eau dans le réservoir d'air peut condenser. Si l'eau n'est pas vidangée, cela risque de corroder et d'affaiblir le réservoir d'air, produisant ainsi un risque de rupture du réservoir d'air.*

AVIS : *Risque de dommages à la propriété. L'eau qui est purgée du réservoir d'air pourrait contenir de l'huile et de la rouille. Ces derniers risquent de tacher.*

4. Une fois la vidange de l'eau terminée, fermez le robinet de vidange (tournez dans le sens des aiguilles d'une montre). Le compresseur d'air peut maintenant être rangé.

REMARQUE : *Si le robinet de vidange à l'égout est obstrue, laissez s'échapper complètement la pression d'air. Le robinet de vidange pourra alors être retirée, nettoyée et remise en place.*

Huile de la pompe du compresseur (fig. 4)

AVIS : *Risque de dommages à la propriété. Utiliser uniquement de l'huile pour compresseur d'air. Ne pas utiliser d'huiles moteur multigrades dans les compresseurs d'air comme le 10W30. Elles laissent des dépôts de carbone dans des composants essentiels, réduisant ainsi les performances et la durée de vie du compresseur.*

REMARQUE : *Huile synthétique mélangée non détergente pour compresseur d'air.*

REMARQUE : *Remplissez lentement le carter jusqu'au haut du trou de remplissage. La capacité du carter est de 53 onces fluides (1,57 L).*

Vérification

1. Le niveau d'huile devrait se situer au milieu du voyant (O).
2. Retirez le bouchon de remplissage d'huile (G) et, si nécessaire, ajoutez lentement de l'huile jusqu'à ce que le niveau se situe au milieu du voyant.

Changement

⚠***AVERTISSEMENT :*** *Purgez le réservoir pour libérer la pression d'air avant de retirer le bouchon de remplissage d'huile ou le bouchon de vidange d'huile.*

1. Retirez le culot du trou de remplissage d'huile (G).
2. Retirez le culot de vidange de l'huile (H) et vidangez l'huile dans un contenant approprié.
3. Remettez en place le culot de vidange d'huile (H) et resserrez-le.
4. Ajoutez lentement de l'huile pour compresseurs jusqu'à ce que le niveau se situe au milieu du voyant (O). REMARQUE : En remplissant le carter, l'huile circule très lentement dans la pompe. Si elle est versée trop rapidement, elle semblera déborder et le carter semblera plein alors qu'il ne l'est pas.

AVIS : *Risque de dommages à la propriété. Un réservoir trop plein d'huile provoquera une défaillance prématurée du compresseur. Ne pas remplir plus que nécessaire.*

5. Replacer la jauge graduée/bouchon (G) du réservoir d'huile de la pompe et serrer solidement.

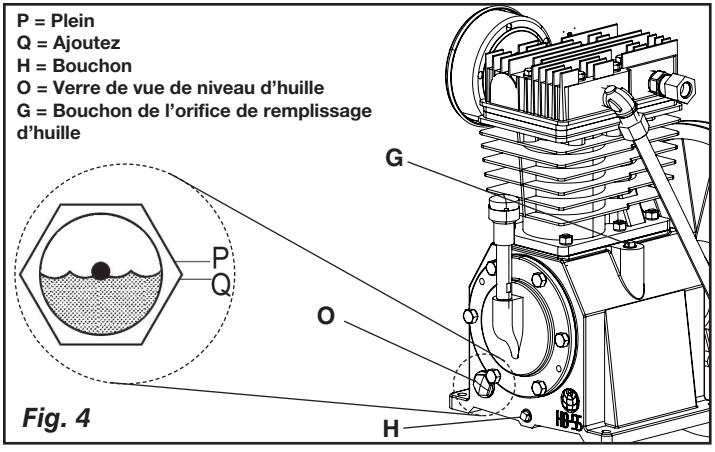

Fig. 4

Remplacement de la courroie (Fig. 1)

⚠***AVERTISSEMENT :*** *Cet appareil se met automatiquement. TOUJOURS arrêter le pouvoir disjoncteur principal, et purger toute la pression du système avant l 'entretien du compresseur, et lorsque le compresseur n'est pas utilisé. Ne pas utiliser l'appareil sans les protections ou carter de courroie. des blessures graves en cas de contact avec les pièces mobiles. Surfaces chaudes. Risque de brûlure. Le la tête de pompe et les pièces contiguës sont très chaudes – ne pas les toucher (consulter la rubrique Surfaces chaudes de la figure 2). Laisser refroidir le compresseur avant d'effectuer des réparations sur l'appareil.*

1. Placez le levier Auto/Off à la position « Off » , Veillez à ce que le sectionneur de tension principale soit HORS et libérez tout l'air pressurisé du réservoir d'air.
2. Retirez la face avant du garde-courroie en retirant les vis et les rondelles (R) à l'aide d'un tournevis Torx T25 bits.
3. Marquez la position de la pompe sur la selle.
4. Desserrez les vis de fixation du moteur et glissez le moteur vers le compresseur d'air.
5. Enlevez la courroie et remplacez-la par une courroie neuve.
6. Voir Réglage de la tension de la courroie avant de serrer les pièces de fixation du moteur.

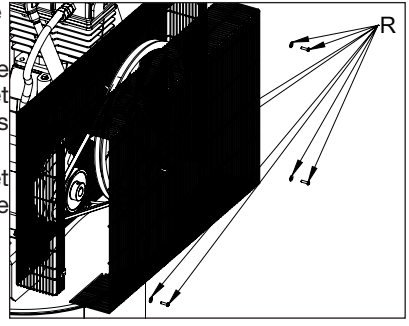

Réglage la tension de la courroie

1. Glissez le moteur à la position originale et alignez-le avec la marque que vous avez faite auparavant sur la selle.
2. Serrez les deux vis de fixation externes du moteur juste assez pour maintenir le moteur en place et pour permettre la vérification de l'alignement de la poulie et du volant.

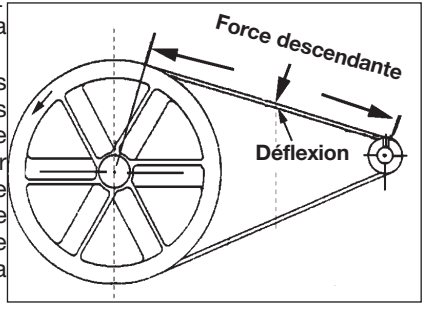

3. La courroie devrait avoir une déflexion de 4,8 mm (3/16 po) au milieu, entre la poulie et le volant, quand un poids de 4,6 kg

(10 lb) est appliqué au point de mi-chemin.

4. Une fois que la bonne tension de courroie est obtenue, serrez les quatre vis de fixation du moteur. Couple à 27,1–33,9Nm (20–25 livres-pied.).

REMARQUE : *Une fois que la poulie du moteur a été déplacée de sa position d'origine réglée à l'usine, les rainures du volant et de la poulie doivent être alignées jusqu'à 1,6 mm (1/16 po) pour éviter une usure excessive de la courroie. Vérifiez l'alignement en exécutant la procédure suivant* ***d'alignement de la poulie et du volant-moteur.***

Alignement de la poulie et du volant-moteur

Une fois que la poulie du moteur a été déplacée de sa position d'origine réglée à l'usine, les rainures du volant et de la poulie doivent être alignées jusqu'à 1,6 mm (1/16 po) pour éviter une usure excessive de la courroie.

Le volant et la poulie du compresseur d'air doivent être alignés (sur un même plan) jusqu'à 1,6 mm (1/16 po pour assurer que la courroie repose bien dans les rainures du volant. Pour vérifier l'alignement, suivez les étapes suivantes :

1. Placez le levier Auto/Off à la position « Off » , Veillez à ce que le sectionneur de tension principale soit HORS et libérez tout l'air pressurisé du réservoir d'air.
2. Retirez le garde-courroie.
3. Placez une règle sur l'extérieur du volant et de la poulie du moteur.
4. Mesurez la distance entre le rebord de la courroie et la règle aux points A1 et A2 de l'illustration. La différence entre les mesures ne doit pas dépasser 1,6 mm (1/16 po).

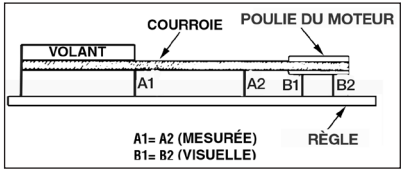

5. Si la différence est supérieure ou inférieure à 1,6 mm (1/16 po), desserrez la vis de fixation fixant la poulie du moteur à l'arbre et réglez la position de la poulie sur l'arbre jusqu'à ce que les mesures A1 et A2 ne soient plus qu'à 1,6 mm (1/16 po) l'une de l'autre.
6. Resserrez la vis de fixation de la poulie du moteur.
7. Effectuez une inspection visuelle de la poulie du moteur pour vous assurer qu'elle est bien perpendiculaire à l'arbre moteur. Les points B1 et B2 de l'illustration devraient sembler égaux. S'ils ne le sont pas, desserrez la vis de fixation de la poulie du moteur et égalisez les points B1 et B2 en vous assurant de ne pas nuire à l'alignement de la courroie que vous avez effectué à l'étape 2.
8. Resserrez la vis de fixation de la poulie du moteur. Couple à 7,9-11,3 Nm (70-100 in-lbs).
9. Remettez en place le garde-courroie.

Soupapes d'admission et d'échappement de la pompe du compresseur d'air

Une fois par année, faites appel à un technicien qualifié pour vérifier les soupapes d'admission et d'échappement de la pompe du compresseur d'air.

Inspection des conduites d'air et des raccords pour des fuites

1. Placez le levier Auto/Off à la position « Off » , Veillez à ce que le sectionneur de tension principale soit HORS et libérez tout l'air pressurisé du réservoir d'air.
2. Appliquez une solution savonneuse à tous les raccords, connexions et tuyaux des conduites d'air.
3. Éliminez toutes les fuites trouvées.

IMPORTANT: *Même des fuites mineures peuvent forcer le compresseur d'air à travailler trop fort, entraînant ainsi une panne prématurée ou un rendement médiocre.*

Boulons de la tête du compresseur - serrage

Les boulons de la tête du compresseur doivent être maintenus à un couple de serrage approprié. Vérifiez le couple de serrage des boulons après les cinq premières heures d'utilisation. Resserrez au besoin. Couple à 43,4-50,2 Nm (32-37 pi-lbs.).

Réparations et Réglages

TOUT ENTRETIEN OU TOUTE RÉPARATION NONMENTIONNÉS ICI DOIVENT ÊTRE EFFECTUÉS PAR UN TECHNICIEN QUALIFIÉ.

⚠***AVERTISSEMENT :*** *Risque d'utilisation dangereuse. L'appareil commence automatiquement à fonctionner lorsqu'il est mis en marche. Lors de l'entretien, vous pourriez vous exposer à des sources de tension, d'air comprimé ou à des pièces en mouvement. Des blessures pourraient ainsi survenir. Avant de faire tout entretien ou toute réparation, débranchez la source d'alimentation du compresseur et laissez s'échapper toute la pression d'air.*

Remplacement ou nettoyage de la soupape de retenue

1. Laissez s'échapper toute la pression du réservoir. Voir **Vidange du réservoir** dans la section *Entretien*.
2. Placez le levier Auto/Off à la position « Off » , Veillez à ce que le sectionneur de tension principale soit HORS et libérez tout l'air pressurisé du réservoir d'air.
3. À l'aide d'une clé réglable, desserrez l'écrou du tube de sortie au niveau du réservoir d'air et de la pompe. Éloignez soigneusement le tube de sortie de la soupape de retenue.
4. À l'aide d'une clé réglable, desserrez l'écrou du tube de décharge de pression au niveau du réservoir d'air. Éloignez soigneusement le tube de décharge de pression de la soupape de retenue.
5. À l'aide d'une clé ouverte de 7/8 po, dévissez la soupape de retenue (en tournant dans le sens contraire des aiguilles d'une montre). Notez l'orientation pour l'assemblage plus tard.

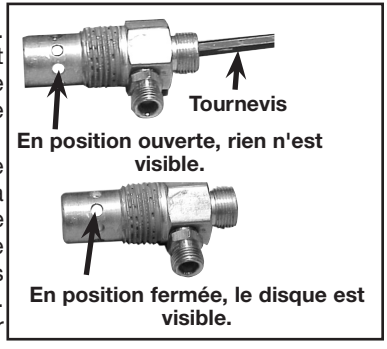

6. À l'aide d'un tournevis, poussez doucement le disque de soupape vers le haut et vers le bas. **REMARQUE :** Le disque de soupape devrait se déplacer librement vers le haut et vers le bas sur un ressort qui retient le disque de soupape en position fermée. Si cela n'est pas le cas, la soupape de retenue doit être nettoyée ou remplacée.
7. Nettoyez ou remplacez la soupape de retenue. Utilisez un solvant, tel qu'un décapant de peinture ou de verni, pour nettoyer la soupape de retenue.
8. Appliquez un produit d'étanchéité sur les filets de la soupape de retenue. Réinstaller la soupape (en tournant dans le sens des aiguilles d'une montre).
9. Remettez en place le tube de décharge de pression et serrez les écrou.

10. Remettez en place le tube de sortie et serrez les écrous.
11. Effectuez la procédure de rodage. Voir la partie intitulée **Procédures de rodage** de la section sur *l'utilisation.*

Service d'entretien additionnel

Le démontage ou un entretien du compresseur d'air au-delà de ce qui est indiqué dans ce guide ne sont pas recommandés. Si un entretien plus poussé est requis, communiquez avec le Centre de service sous garantie autorisé le plus proche.

Accessoires

Les accessoires recommandés pour votre outil peuvent être achetés auprès du distributeur local ou d'un centre de réparation agréé. Si vous avez besoin d'assistance pour trouver un accessoire pour votre outil, veuillez composer le 1-888-895-4549 ou visiter notre site Web à www.dewalt.com.

⚠***AVERTISSEMENT :*** *l'utilisation de tout autre accessoire non recommandé avec cet outil pourrait s'avérer dangereuse. Utiliser uniquement des accessoires de classement égal ou supérieur à celui de la compresseur d'air.*

Information sur les réparations

Veuillez recueillir les informations suivantes pour tous les appels au Service à la clientèle :

Numéro du modèle _____ Numéro de série _____

Date et lieu de l'achat _____

Réparations

Pour assurer la SÉCURITÉ et la FIABILITÉ du produit, les réparations, l'entretien et les réglages doivent être réalisés par un centre de réparation en usine DEWALT, un centre de réparation agréé DEWALT ou par d'autres techniciens qualifiés. Toujours utiliser des pièces de rechange identiques.

Garantie limitée

Les outils **industriels DEWALT** sont garantis à partir de la date d'achat.

Garantie limitée de **DEUX (2) ANS** sur tous les compresseurs lubrifiés à l'huile

Garantie limitée **d'UN (1) AN** sur tous les compresseurs sans huile. Cette garantie n'est pas transférable à une tierce partie.

DEWALT réparera ou remplacera, à ses frais, à la discrétion de DEWALT, tout défaut pour vice de matière ou de fabrication. Pour toute information complémentaire relative à la couverture de la garantie et aux réparations prises en charge par celle-ci, veuillez appeler le 1-(888)-895-4549 ou vous rendre sur le site dewalt.com. Cette garantie ne s'applique pas aux accessoires, ou à tout dommage causé par des réparations effectuées ou tentées par un tiers. Cette garantie ne s'applique pas aux marchandises vendues par DEWALT qui ont été fabriquées par une autre compagnie, et identifiées comme telles, comme l'essence pour les moteurs. La garantie de son fabricant, si existante, sera alors applicable. **TOUT DOMMAGE, PERTE OU DÉPENSE ACCESSOIRE, INDIRECT OU IMMATÉRIEL POUVANT RÉSULTER DE TOUT DÉFAUT, DÉFAILLANCE OU DYSFONCTIONNEMENT DU PRODUIT N'EST PAS COUVERT PAR CETTE GARANTIE.** Certains états n'autorisent aucune exclusion ou limitation de garantie contre tout préjudice accessoire ou indirect, aussi il se peut que la limitation ou l'exclusion susdite ne vous soit pas applicable. **TOUTE GARANTIE IMPLICITE, Y COMPRIS DE QUALITÉ MARCHANDE OU D'ADÉQUATION DANS UN BUT PARTICULIER, EST LIMITÉE À UN AN À COMPTER DE LA DATE D'ACHAT.**

Certains états n'autorisent aucune limitation quant à la durée de toute garantie implicite, aussi il se peut que l'exclusion susdite ne

vous soit pas applicable. Cette garantie confère des droits légaux particuliers à l'acheteur, mais celui-ci pourrait aussi bénéficier d'autres droits variant d'un territoire à l'autre.

Ce à quoi la Société s'engage : (la société) s'engage à couvrir les pièces et la main-d'œuvre requises afin de remédier aux défauts importants constatés dans les matériaux ou dans la main-d'œuvre au cours de la première année suivant l'acquisition, sous réserve de ce qui suit. Les pièces utilisées pour la réparation des unités complètes ou des accessoires sont garanties pendant ce qui reste de la période de garantie initiale.

Qu'est-ce qui n'est pas couvert par cette garantie? L'incapacité de l'acheteur au détail initial d'installer, d'entretenir et d'exploiter cet équipement conformément aux pratiques industrielles normales. Les modifications apportées au produit ou le bricolage effectué sur ses composants, ou le manquement à se conformer aux recommandations spécifiques de la Société énoncées dans le manuel de l'utilisateur, rendront cette garantie nulle et non avenue. La Société rejette toute responsabilité pour les réparations, remplacements ou ajustements à l'équipement ou pour tous coûts reliés au travail effectués sur l'équipement par l'acheteur sans l'autorisation préalable écrite de la Société. Les effets de la corrosion, de l'érosion, des conditions environnementales ambiantes, des défauts de nature superficielle et les matériaux requis pour la maintenance de routine sont expressément exclus de cette garantie. Les matériaux requis pour la maintenance de routine tels que l'huile, les lubrifiants et les filtres à air, ainsi que les changements d'huile, de filtres à air, de tension de courroie, etc. font partie de la responsabilité de l'utilisateur. Parmi les exclusions supplémentaires, il faut ajouter les dommages liés au transport, les défaillances liées à la négligence, aux accidents ou à une mauvaise utilisation, les moteurs à induction alimentés par un alternateur, les fuites d'huile, les fuites d'air, la consommation d'huile, les raccords qui fuient, les boyaux, les robinets d'évacuation d'air, les soupapes de purge et les tuyaux de transfert.

- Les composants suivants sont considérés comme des équipements sujets à usure normale et ne sont donc couverts que pendant un an après leur vente : courroies, faisceaux, volants, clapets de non-retour, manostats, déchargeurs à air, manettes d'accélération, moteurs électriques, balais, régulateurs, joints toriques, manomètres, tubes, conduits, raccords, attaches, roues, porte-outils à attache rapide, garnitures, joints d'étanchéité, logements de filtre à air, segments de piston, biellettes de liaison et joints de piston.
- Les charges de main-d'œuvre, d'appels de service et de déplacements ne sont pas couvertes au-delà de la première année suivant l'acquisition pour les compresseurs fixes (compresseurs sans poignées et sans roues). Les réparations nécessitant des heures supplémentaires, des taux et tarifs de fin de semaine ou toute autre charge excé dant le tarif standard de travail en atelier ne sont pas couvertes.
- Temps requis pour la formation d'orientation afin de permettre au centre de service d'obtenir accès au produit, ou du temps supplémentaire pour cause de sortie inadéquate.
- Les dommages causés par une tension incorrecte, un câblage inapproprié ou l'installation du compresseur par quelqu'un d'autre qu'un électricien professionnel agréé rendront la garantie nulle et non avenue.
- Les dommages causés par un entretien inadéquat du filtre.
- L'usure de la pompe ou l'endommagement d'une valve causé par l'emploi d'un lubrifiant contre-indiqué.
- L'usure de la pompe ou un dommage causé par une contamination d'huile.

- L'usure de la pompe ou l'endommagement d'une valve causé par le non-respect des directives d'entretien correctes.
- L'utilisation sans huile ou avec un niveau d'huile insuffisant.
- Les moteurs à essence, si le produit est équipé d'un tel moteur : se reporter au manuel d'utilisation du moteur pour la couverture de la garantie spécifique du fabricant du moteur.

Pièces achetées séparément : la garantie pour les pièces achetées séparément, telles que les pompes, les moteurs, etc. s'applique comme suit :

À compter de la date d'achat

- Toutes les pompes à un étage ou à deux étages 1 an
- Moteurs électriques 90 jours
- Moteur/pompe universel(le) 30 jours
- Toute autre pièce 30 jours
- Aucune autorisation de retour ne sera accordée pour les composants électriques une fois qu'ils sont installés.

Comment obtenir du service? Afin d'être admissible au service sous garantie, vous devez être l'acheteur original au détail, et de fournir une preuve d'achat de l'un des concessionnaires de la société, des distributeurs ou magasins de vente au détail. Compresseurs portatifs ou des pièces doivent être livrées, ou expédiés, au Centre de service agréé le plus proche. Tous les frais de transport et les frais associés de voyage doivent être pris en charge par le consommateur. S'il vous plaît appelez notre numéro sans frais 1-888-895-4549 pour une assistance.

CETTE GARANTIE VOUS ACCORDE DES DROITS LÉGAUX SPÉCIFIQUES ET VOUS POUVEZ BÉNÉFICIER D'AUTRES DROITS EN FONCTION DE L'ÉTAT OÙ CELLE-CI S'APPLIQUE.

LA SOCIÉTÉ N'OFFRE AUCUNE AUTRE GARANTIE NI REPRÉSENTATION DE QUELQUE SORTE QUE CE SOIT, EXPRESSE OU IMPLICITE, EXCEPTION FAITE DE LA PROPRIÉTÉ. TOUTES LES GARANTIES IMPLICITES, EN PARTICULIER TOUTE GARANTIE DE COMMERCIALISATION ET D'ADÉQUATION À UN USAGE PARTICULIER, SONT REJETÉES PAR LA PRÉSENTE. TOUTE RESPONSABILITÉ POUR DES DOMMAGES INDIRECTS ET CORRESPONDANT À L'UNE QUELCONQUE DES GARANTIES ET À L'ENSEMBLE DE CELLES-CI, À D'AUTRES CONTRATS, À LA NÉGLIGENCE OU À D'AUTRES DÉLITS CIVILS, EST EXCLUE CONFORMÉMENT AUX CLAUSES D'EXCLUSION DE LA LOI.

REMPLACEMENT GRATUIT DES ÉTIQUETTES D'AVERTISSEMENT : si les étiquettes d'avertissement deviennent illisibles ou sont manquantes, composer le 1-888-895-4549 pour en obtenir le remplacement gratuit.



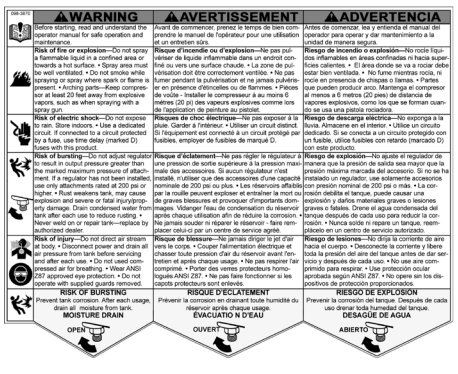





Français

Guide de dépannage

Cette section énumère les défaillances les plus communes, leurs causes et les mesures correctives. L'opérateur ou le personnel d'entretien peut exécuter certaines mesures correctives, d'autres exigent l'assistance d'un technicien DEWALT qualifié ou du distributeur.

Problème	**Code**
Fuites d'air	1
Fuites d'air dans le réservoir d'air ou dans les soudures du réservoir d'air	2
Fuites d'air entre la tête et la plaque porte-soupapes	3
Fuites d'air à la soupape de sûreté	4
Le compresseur ne fournit pas la quantité d'air requise pour le fonctionnement d'accessoires	1, 5, 6, 7, 9, 10
Admission d'air restreinte.	9
Huile dans l'air évacué	9, 19, 31
Cliquetis	4, 10, 11, 12, 13, 14
Usure excessive de la courroie	10, 11, 14, 15
Sifflement	10
Humidité présente dans le carter de la pompe	1, 3, 8, 17, 18, 19, 20, 21, 22
Appel de courant excessif	14, 23, 24
Le compresseur ne démarre pas quand il fait froid	17, 31, 32
Le compresseur cale	25, 26, 27
Surchauffe	24, 30, 31

Codes de dépannage

CODE	CAUSE POSSIBLE	POSSIBLE SOLUTION
1	Les raccords de tube ne sont pas assez serrés	Serrer les raccords qui émettent un sifflement de fuite d'air. Contrôler les raccords avec une solution d'eau savonneuse. NE SERREZ PAS TROP.
2	Réservoir d'air défectueux	Le réservoir d'air doit être remplacé. Ne pas réparer la fuite. ⚠***AVERTISSEMENT :*** *Risque d'éclatement. Ne pas percer le réservoir d'air, ni le souder ou le modifier de quelque manière qui soit. Ces interventions l'affaibliront. Le réservoir risque de rompre ou d'exploser.*
3	Joints d'étanchéité fuyants	Communiquer avec un centre de réparation en usine de DEWALT ou un centre de réparation agréé DEWALT.
4	Soupape de sûreté défectueuse	Faites fonctionner la soupape manuellement en tirant sur la bague. Si la soupape fuit toujours, la remplacer.
5	Utilisation excessive prolongée de l'air	Diminuer la quantité d'air utilisée.
6	Le compresseur ne dispose pas de la capacité adéquate pour l'utilisation d'accessoires	Vérifier les exigences d'air de l'accessoire. Si elles sont supérieures au CFM ou à la pression fournie par le compresseur d'air, un compresseur de plus grande capacité est requis pour l'utilisation de l'accessoire.
7	Trou dans le boyau	Vérifiez et remplacez-le au besoin.
8	L'appareil fonctionne dans des conditions humides ou fraîches	Déplacer l'appareil dans un endroit sec bien aéré.
9	Filtre d'admission d'air obstrué	Nettoyer ou remplacer le filtre d'admission d'air.
10	Courroie lâche	Contrôler la tension de la courroie, consulter la rubrique **Réglage de la tension de la courroie** sous *Entretien*.

CODE	CAUSE POSSIBLE	POSSIBLE SOLUTION
11	Poulie lâche	Serrer les vis de calage de la poulie à un couple de 9,6 à 10,2 Nm (85 à 90 po-lb).
12	Volant lâche	Serrer la vis du volant à un couple de 20,0 à 24,4 Nm (14 à 18 pi-lb).
13	Accumulation de carbone dans la pompe	Communiquer avec un centre de réparation en usine de DEWALT ou un centre de réparation agréé DEWALT.
14	Courroie trop serrée	Contrôler la tension de la courroie, consulter la rubrique Réglage de la tension de la courroie sous Entretien.
15	Mauvais alignement de la poulie	Consulter la rubrique **Alignement de la poulie-moteur/ volant** sous *Entretien*.
16	Huile de la pompe est faible	Ajouter à la pompe un mélange d'huiles synthétiques sans détergent pour compresseur d'air. Consulter la rubrique **Huile de la pompe du compresseur** sous *Entretien*.
17	Utilisation d'huile détergente dans la pompe	Vidanger l'huile et recharger la pompe avec un mélange d'huiles synthétiques sans détergent pour compresseur d'air.
18	Cycles de travail extrêmement léger	Utiliser l'appareil pour des cycles de travail plus prolongés. On recommande de l'utiliser à plein régime de 50 % à 75 % de son temps de fonctionnement et au ralenti pour les autres 25 %.
19	Segments de pistons endommagés ou usés	Communiquer avec un centre de réparation en usine de DEWALT ou un centre de réparation agréé DEWALT.
20	Cylindre ou piston endommagé ou usé	Communiquer avec un centre de réparation en usine de DEWALT ou un centre de réparation agréé DEWALT.
21	Fini du cylindre du compresseur est usé	Communiquer avec un centre de réparation en usine de DEWALT ou un centre de réparation agréé DEWALT.

CODE	CAUSE POSSIBLE	POSSIBLE SOLUTION
22	Eau présente dans l'huile de la pompe	Vidanger l'huile et recharger la pompe avec un mélange d'huiles synthétiques sans détergent pour compresseur d'air.
23	Tension insuffisante/surcharge du moteur	Vérifiez que l'alimentation est adéquate et que le compresseur est branché sur un circuit séparé. Vérifiez que le compresseur est branché sur son propre circuit. Si une rallonge est utilisée, essayez sans utiliser la rallonge. Si le compresseur est branché sur un circuit protégé par un fusible, utilisez des fusibles temporisés à double élément (Buss Fusetron de type «T» seulement).
24	Passages d'air colmatés	Inspectez et remplacez les tubes de transfert ou la soupape d'arrêt, selon les besoins.
25	Tension insuffisante vers le moteur	Fournissez une puissance adéquate.
26	Soupape d'arrêt défectueuse	Remplacez la soupape d'arrêt.
27	Grippage de la pompe	Communiquer avec un centre de réparation en usine de DEWALT ou un centre de réparation agréé DEWALT.
28	Niveau d'huile trop élevé	Ramenez au niveau correct. Consulter la rubrique **Huile de la pompe du compresseur** sous *Entretien*.
29	Mauvaise aération	Placez le compresseur dans un endroit frais, sec et bien aéré, à une distance de 30 cm (12 po.) du mur le plus proche.
30	Surfaces de refroidissement sales	Nettoyez entièrement toutes les surfaces de refroidissement.
31	Trop de pression de refoulement dans le réservoir	Ouvrez le robinet de purge quand vous mettez en marche le moteur.
32	Le compresseur est trop froid	Placez le compresseur dans un endroit plus chaud.

Glossaire

CFM : Pieds cubes par minute ; une unité de mesure de débit d'air.

SCFM : pied cube par minute (standard), une unité de mesure du soufflage.

PSI : livres par pouce carré, une unité de mesure de pression.

Pression d'enclenchement: Point de pression bas réglé en usine qui met en marche le moteur de la pompe pour remettre sous pression l'air dans le réservoir.

Pression de déclenchement: Point de pression haut réglé en usine qui arrête le moteur de la pompe et la hausse de pression dans le réservoir au-delà d'un certain niveau.

Bien aéré: Qualifie un endroit où les gaz d'échappement ou les vapeurs sont remplacés par de l'air frais.

Circuit réservé: Circuit électrique réservé exclusivement au compresseur d'air.

ASME: American Society of Mechanical Engineers (Société américaine des ingénieurs mécaniciens). Indique que les composants sont fabriqués, testés et examinés selon les normes définies par l'ASME.

CSA: L'association canadienne de normes

Indique que les produits qui font avoir examinée cette inscription avoir été fabriquée, testée et aux normes qui sont fixées par CSA.

L'association canadienne de normes (Etats-Unis) Indique que les produits qui font avoir fabriqué cette inscription, testé et examiné aux normes qui sont fixées par CSA. Ces produits se conforment également à la norme 1450 d'cU.l..

Code Californien : l'appareil pourrait être conforme au code de la Californie 462 (l) (2)/(M) (2). L'étiquette de spécifications/modèle est apposée sur le côté du réservoir d'air des appareils qui sont

NOTES

Compresor de aire

A. Filtro de entrada de aire de la bomba
B. Interruptor ENCENDIDO [AUTO(-)] / Off (APAGADO(O)]
C. Manómetro del tanque de aire
D. Salida de la línea de aire
E. Válvula de seguridad
F. Válvula de drenaje del tanque de aire
G. Varilla para medición del nivel de aceite de la bomba/Tapón de llenado de aceite
H. Tapón de drenaje de aceite de la bomba
I. Válvula reguladora
J. Arrancador magnetica

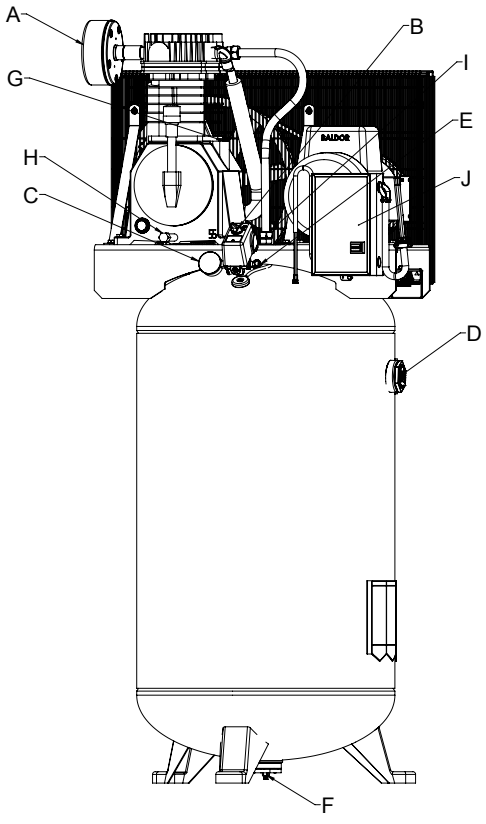

Especificaciones de la bomba

2 Cilindros
De dos etapas
Lubricación con aceite
Reparto de cárter de hierro, cilindros y la culata
Peso: 62 kg (136 lbs.)
Capacidad de aceite: 1567 ml (53 onzas)

Especificaciones

MODELO	**DXCMV7518075**
PESO	623 lbs. (283 kg)
ALTURA	71” (1803,4 mm)
ANCHO	30.78” (781,8 mm)
CAPACIDAD DEL TANQUE DE AIRE	80 gallons (302,8 liters)
PRESIÓN APROXIMADA DE ALIVIO	200 psi

Superficies calientes

FIG. 2

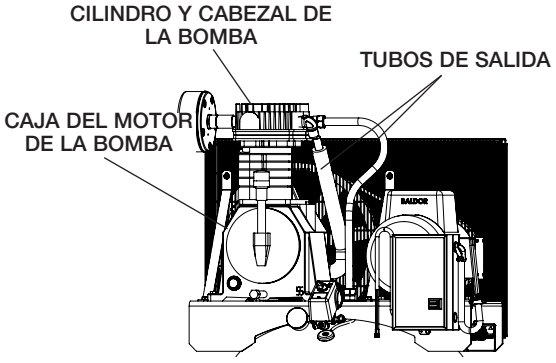

Definiciones: Normas de seguridad

Las siguientes definiciones describen el nivel de gravedad de cada advertencia. Lea el manual y preste atención a estos símbolos.

⚠ ***PELIGRO:*** *Indica una situación de peligro inminente que, si no se evita,* ***provocará*** *la* ***muerte o lesiones graves****.*

⚠ ***ADVERTENCIA:*** *Indica una situación de peligro potencial que, si no se evita,* ***podría*** *provocar la* ***muerte o lesiones graves****.*

⚠ ***ATENCIÓN:*** *Indica una situación de peligro potencial que, si no se evita,* ***puede*** *provocar* ***lesiones leves o moderadas****.*

AVISO: *Se refiere a una práctica no relacionada a lesiones corporales que de no evitarse* ***puede*** *resultar en* ***daños a la propiedad****.*

SI TIENE ALGUNA PREGUNTA O ALGÚN COMENTARIO QUE HACER CON RESPECTO A ESTA O CUALQUIER OTRA HERRAMIENTA DEWALT, LLÁMENOS SIN CARGO AL: 1-888-895-4549

Instrucciones de seguridad importantes

⚠ ***ADVERTENCIA:*** No opere esta unidad hasta que haya leído y comprendido este manual de instrucciones de seguridad, operación y mantenimiento.

⚠ ***ADVERTENCIA:*** *Este producto contiene sustancias químicas, reconocidas por el Estado de California como causantes de cáncer, defectos de nacimiento u otros problemas reproductivos.* ***Lávese las manos después de utilizarlo.***

⚠ ***ADVERTENCIA:*** Algunos tipos de polvo contienen sustancias químicas, como el amianto y el plomo de las pinturas de base plomo, reconocidas por el Estado de California como causantes de cáncer, defectos de nacimiento u otros problemas reproductivos.

GUARDE ESTAS INSTRUCCIONES



⚠*PELIGRO: RIESGO DE EXPLOSIÓN O INCENDIO*

¿QUÉ PUEDE SUCEDER?	CÓMO EVITARLO
• Es normal que los contactos eléctricos dentro del motor y el interruptor de presión produzcan chispas.	• Opere siempre el compresor en un área bien ventilada libre de materiales combustibles, gasolina o vapores de solventes.
• Si las chispas eléctricas del compresor entran en contacto con vapores inflamables, pueden encenderse, provocando un incendio o una explosión.	• Si se pulverizan materiales inflamables, ubique el compresor al menos a 6,1 m (20 pies) del área de pulverización. Se puede necesitar manguera adicional. • Guarde los materiales inflamables en lugar seguro lejos del compresor.
• Restringir cualquiera de las aberturas de ventilación del compresor puede producir un sobrecalentamiento grave y podría provocar un incendio.	• Nunca coloque objetos contra o sobre la bomba del compresor. • Opere el compresor en un lugar abierto con una distancia de al menos 30,5 cm (12 pulg.) a cualquier pared u obstrucción que pudiera restringir el flujo de aire fresco a las aberturas de ventilación. • Opere el compresor en un área limpia, seca y bien ventilada. No opere la unidad dentro de la casa o en un área muy cerrada.
• El funcionamiento sin atención de este producto podría provocar lesiones personales o daños a la propiedad. Para disminuir el riesgo de incendio, no permita que el compresor funcione sin que alguien lo controle.	• Permanezca siempre controlando el producto cuando está en funcionamiento. • Siempre apague el interruptor principal de alimentación cuando no esté en uso.



⚠*PELIGRO: RIESGO RESPIRATORIO (ASFIXIA)*

¿QUÉ PUEDE SUCEDER?	CÓMO EVITARLO
• El aire comprimido que sale de su compresor no es seguro para respirarlo. El flujo de aire puede contener monóxido de carbono, vapores tóxicos o partículas sólidas del tanque de aire. Respirar estos contaminantes puede provocar lesiones graves o la muerte.	• El aire que se obtiene directamente del compresor no se debe usar nunca para consumo humano. El compresor no incluye equipo de seguridad en línea y filtros adecuados para consumo humano.

- La exposición a productos químicos en el polvo producido por las herramientas eléctricas al lijar, aserrar, esmerilar, taladrar y otras actividades de la construcción puede ser peligrosa.
- Los materiales pulverizados como pintura, solventes para pinturas, removedor de pintura, insecticidas y herbicidas pueden contener vapores dañinos y venenos.
- Trabaje en un área con buena ventilación cruzada. Lea y siga las instrucciones de seguridad que se proveen en la etiqueta o en la ficha técnica de los materiales que está utilizando. Siempre utilice equipamiento de seguridad certificado: protección respiratoria aprobada por NIOSH/OSHA o una mascarilla facial adecuada diseñada para usar para los fines que usted requiere.



⚠PELIGRO: RIESGO DE EXPLOSIÓN

Tanque de aire: El 26 de febrero de 2002, la Comisión de Seguridad para Productos de Consumo delos Estados Unidos publicó el Comunicado # 02-108 sobre la seguridad en los tanques de compresores de aire:

Los tanques receptores de los compresores de aire no tienen una vida útil infinita. La vida útil del tanque depende de diversos factores, incluyendo las condiciones de operación, las condiciones ambientales, la instalación debida del mismo, modificaciones realizadas en el campo y el nivel de mantenimiento que reciba. Es difícil prever cuál será el efecto exacto de estos factores sobre la vida útil del tanque receptor de aire.

Si no se siguen procedimientos de mantenimiento debidos, la corrosión interna de la pared interior del tanque receptor de aire puede causar una ruptura imprevista en el tanque de aire, lo que hará que el aire presurizado escape con fuerza y repentinamente, pudiendo lesionar al usuario.

El tanque de su compresor de aire debe ser dado de baja al final del año que aparece en la etiqueta de advertencia de su tanque.

Las siguientes condiciones pueden llevar a debilitar el tanque de aire y ocasionar la explosión violenta del mismo:

¿QUÉ PUEDE SUCEDER?	CÓMO EVITARLO
• No drenar correctamente el agua condensada del tanque de aire, que provoca óxido y adelgazamiento del tanque de aire de acero.	• Drene el tanque diariamente o luego de cada uso. Si un tanque de aire presenta una pérdida, reemplácelo inmediatamente con un tanque nuevo o reemplace todo el compresor.

• Modificaciones o intento de reparación del tanque de aire.	• Nunca perfore, suelde o haga ninguna modificación al tanque de aire o a sus elementos. Nunca intente reparar un tanque de aire dañado o con pérdidas. Reemplácelo con un tanque de aire nuevo.
• Las modificaciones no autorizadas de la válvula de seguridad o cualquier otro componente que controle la presión del tanque.	• El tanque está diseñado para soportar determinadas presiones de operación. Nunca realice ajustes ni sustituya piezas para cambiar las presiones de operación fijadas en la fábrica.
Elementos y accesorios:	
• Exceder las indicaciones de presión para las herramientas neumáticas, las pistolas pulverizadoras, los accesorios neumáticos, los neumáticos y otros artículos inflables puede hacer que exploten o revienten, y puede provocar lesiones graves.	• Siga la recomendación del fabricante del equipo y nunca exceda el nivel máximo de presión aceptable para los elementos. Nunca utilice el compresor para inflar objetos pequeños de baja presión, tales como juguetes de niños, pelotas de fútbol o de basquetbol, etc.

Neumáticos:

- El inflado excesivo de los neumáticos podría causar lesiones graves y daño a la propiedad.
- Utilice un medidor de presión de neumáticos para controlar la presión de éstos antes de cada uso y mientras los infla; observe el flanco para ver la presión correcta del neumático.

NOTA: Los tanques de aire, los compresores y el equipo similar que se usa para inflar neumáticos pueden llenar neumáticos pequeños como éstos con mucha rapidez. Ajuste el regulador de presión en el suministro de aire a un valor que no supere el de la presión del neumático. Agregue aire en forma gradual y use con frecuencia el medidor de presión de neumáticos para evitar inflarlos.



⚠*PELIGRO: RIESGO DE LESIÓN O DAÑO A LA PROPIEDAD AL TRANSPORTAR O ALMACENAR LA UNIDAD*

¿QUÉ PUEDE SUCEDER?	CÓMO EVITARLO
• Se puede producir una pérdida o derrame de aceite, lo que podría provocar peligro de incendio o inhalación, lesiones graves o la muerte. Los derrames de aceite dañarán alfombras, pintura u otras superficies de vehículos o remolques.	• Coloque siempre el compresor en un tapete protector cuando lo transporte, para proteger al vehículo de daños por pérdidas. Retire inmediatamente el compresor del vehículo una vez que haya llegado a destino. Mantenga siempre el compresor nivelado y nunca lo coloque de costado.



⚠*ADVERTENCIA: RIESGO DE OBJETOS DESPEDIDOS*

¿QUÉ PUEDE SUCEDER?	CÓMO EVITARLO
• La corriente de aire comprimido puede provocar lesiones en los tejidos blandos de la piel expuesta y puede impulsar suciedad, astillas, partículas sueltas y objetos pequeños a gran velocidad, que pueden producir daños en la propiedad y lesiones personales.	• Utilice siempre equipo de seguridad certificado: anteojos de seguridad ANSI Z87.1(CAN/CSA Z94.3) con protección lateral al usar el compresor. • Nunca apunte ninguna boquilla ni pulverizador a ninguna parte del cuerpo o a otras personas o animales. • Apague siempre el compresor y drene la presión de la manguera de aire y del tanque de aire antes de intentar hacer mantenimiento, conectar herramientas o accesorios.



⚠*ADVERTENCIA: RIESGO DE SUPERFICIES CALIENTES*

¿QUÉ PUEDE SUCEDER?	CÓMO EVITARLO
• Tocar metal expuesto como el cabezal del compresor, el cabezal del motor, el escape del motor, o los tubos de salida puede provocar quemaduras graves.	• Nunca toque ninguna parte metálica expuesta del compresor durante o inmediatamente después de su funcionamiento. El compresor continuará caliente durante varios minutos después de su funcionamiento. • No toque las cubiertas protectoras ni intente realizar mantenimiento hasta que la unidad se haya enfriado.



⚠*ADVERTENCIA: RIESGO DE DESCARGA ELÉCTRICA*

¿QUÉ PUEDE SUCEDER?	CÓMO EVITARLO
• Su compresor de aire funciona con electricidad. Como cualquier otro mecanismo que funciona con electricidad, si no se lo utiliza correctamente puede provocar descargas eléctricas.	• Nunca haga funcionar el compresor al aire libre cuando está lloviendo o en condiciones de humedad. • Nunca haga funcionar el compresor sin las cubiertas de protección o si están dañadas.
• Que personal no calificado intente realizar reparaciones puede provocar lesiones graves o muerte por electrocución.	• Cualquier cableado eléctrico o las reparaciones requeridas para este producto deben ser realizadas por un Centro de servicio de fábrica o un centro de mantenimiento autorizado de acuerdo con los códigos eléctricos nacionales y locales.
• Puesta a tierra: La no colocación de la puesta a tierra adecuada para este producto puede provocar lesiones graves o muerte por electrocución. Consulte las Instrucciones de Conexión a tierra en Instalación.	• Asegúrese de que el circuito eléctrico al que se conecta el compresor suministre la conexión a tierra adecuada, el voltaje adecuado y el fusible de protección adecuado.



⚠ADVERTENCIA: RIESGO DE OPERACIÓN INSEGURA

¿QUÉ PUEDE SUCEDER?	CÓMO EVITARLO
• La operación insegura de su compresor de aire podría producir lesiones graves o la muerte, a usted mismo o a otras personas.	• Revise y comprenda todas las instrucciones y advertencias de este manual. • Familiarícese con la operación y los controles del compresor de aire. • Mantenga el área de operaciones libre de personas, mascotas y obstáculos. • Mantenga a los niños alejados del compresor de aire en todo momento. • No opere el producto cuando esté cansado o bajo la influencia de alcohol o drogas. Manténgase alerta en todo momento. • Nunca anule las características de seguridad de este producto. • Equipe el área de operaciones con un extintor de incendios. • No opere la máquina si faltan piezas, si éstas están rotas o si no son las autorizadas. • Nunca se pare sobre el compresor.



⚠ADVERTENCIA: RIESGO POR PIEZAS MÓVILES

¿QUÉ PUEDE SUCEDER?	CÓMO EVITARLO
• Las piezas móviles como la polea, el volante y la correa pueden provocar lesiones graves si entran en contacto con usted o con sus ropas.	• Nunca haga funcionar el compresor sin los protectores o cubiertas o si los mismos están dañados. • Mantenga el cabello, la ropa y los guantes alejados de las piezas en movimiento. Las ropas holgadas, las joyas o el cabello largo pueden quedar atrapados en las piezas móviles. • Los orificios de ventilación pueden cubrir piezas en movimiento, por lo que también se deben evitar.
• Intentar hacer funcionar el compresor con partes dañadas o faltantes, o intentar reparar el compresor sin las cubiertas protectoras puede exponerlo a piezas móviles lo que puede provocar lesiones graves.	• Cualquier reparación requerida por este producto debe ser realizada por un centro de servicio de fábrica DEWALT o un centro de servicio autorizado DEWALT.



⚠*ADVERTENCIA: RIESGO DE LESIÓN POR LEVANTAR MUCHO PESO*

¿QUÉ PUEDE SUCEDER?	CÓMO EVITARLO
• El intento de levantar un objeto muy pesado puede provocar lesiones graves.	• El compresor es demasiado pesado como para que lo levante una sola persona. Consiga ayuda de otras personas para levantarlo.



⚠*ATENCIÓN: RIESGO POR RUIDOS*

¿QUÉ PUEDE SUCEDER?	CÓMO EVITARLO
• En determinadas condiciones y según el período de uso, el ruido provocado por este producto puede originar pérdida de audición.	• Utilice siempre equipo de seguridad certificado: protección auditiva ANSI S12.6 (S3.19).

SAVE THESE INSTRUCTIONS FOR FUTURE USE

CONOZCA SU COMPRESOR DE AIRE

LEA ESTE MANUAL DEL PROPIETARIO Y SUS NORMAS DE SEGURIDAD ANTES DE OPERAR LA UNIDAD. Compare las ilustraciones contra su unidad a fin de familiarizarse con la ubicación de los distintos controles y regulaciones. Conserve este manual para referencias futuras.

CARACTERÍSTICAS (Fig. 1)

NTERRUPTOR DE AUTO (-) / APAGADO (O)

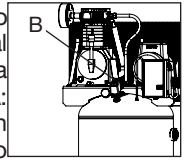

Coloque este interruptor (B) en la posición Encendido (AUTO) (-) para suministrar energía automática al interruptor de presión y en Apagado (OFF) (O) para cortar la energía al final de cada uso. NOTA: SIEMPRE asegúrese de que el interruptor (B) esté en la posición de apagado (OFF) (O) antes de retirar o reemplazar la cubierta del interruptor de presión.

INTERRUPTOR DE PRESIÓN

El interruptor de presión (B) arranca automáticamente el motor cuando la presión del tanque de aire cae por debajo de la presión de arranque fijada en fábrica. Detiene el motor cuando la presión del tanque de aire alcanza la presión de corte fijada en fábrica.

VÁLVULA DE SEGURIDAD

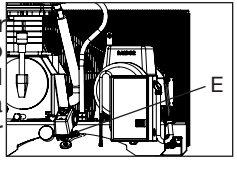

Esta válvula (E) está diseñada para prevenir fallas del sistema aliviando la presión cuando el aire comprimido alcanza un nivel predeterminado. La válvula está calibrada desde fábrica y no se debe quitar ni modificar de ninguna forma.

VÁLVULA DE CONTROL

Cuando el compresor de aire está funcionando, la válvula de control

(I) está abierta, permitiendo al aire comprimido entrar al tanque de aire. Cuando el compresor de aire alcanza la presión de corte, la válvula de control se cierra, permitiendo que la presión de aire se conserve dentro del tanque de aire.

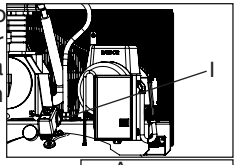

FILTRO DE ENTRADA DE AIRE

El filtro (A) está diseñado para limpiar el aire que ingresa a la bomba. Para asegurar que la bomba reciba continuamente un suministro de aire limpio, fresco y seco, el filtro debe estar siempre limpio y la entrada del filtro libre de obstrucciones.

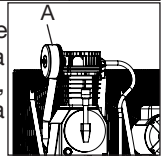

VÁLVULA DE DRENAJE DEL TANQUE DE AIRE

La válvula de drenaje (F) está ubicada en la base del tanque de aire y se utiliza para drenar la condensación al terminar cada etapa de uso. Consulte **Drenar el tanque de aire** en la sección *Mantenimiento*.

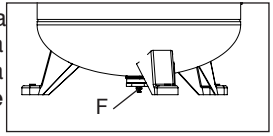

MANÓMETRO (MEDIDOR DE PRESIÓN) DEL TANQUE

El manómetro (medidor de presión) del tanque (C) indica la presión de aire de reserva en el tanque.

ARRANCADOR MAGNÉTICO (REQUERIDO)

NOTA: Estas unidades requieren la instalación de un arrancador magnético (J).

Si se desea, se pueden instalar en la pared los arrancadores magnéticos que no vienen enstalados en el compresor desde la fábrica. Instale lo más cerca posible del compresor. Corte los cables al tamaño correcto, protéjalos con tubo de plástico y provea la protección para los circuitos secundarios según el Codigo Electrico Nacional.

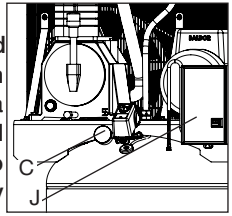

VÁLVULA ESFÉRICA/VÁLVULA DE SALIDA DE AIRE: *(se vende por separado, no ha sido ilustrada)* Abra y cierre la distribución de aire des compresor. Consulte el párrafo **Sistema de distribución de aire** en la sección *Instalación*.

VÁLVULA REGULADORA*(vendido por separado, no mostrado):* Cuando el compresor de aire se encuentra funcionando, la válvula reguladora esta "abierta", permitiendo la entrada del aire comprimido al tanque de aire. Cuando el nivel de presión del tanque alcanza el punto de "corte", la válvula reguladora "se cierra", reteniendo la presión del aire dentro del tanque. Consulte el párrafo **Sistema de distribución de aire** en la sección *Instalación*.

BOMBA DE COMPRESIÓN DEL AIRE

Comprime el aire dentro del tanque. El aire de trabajo no se encuentra disponible hasta que el compresor haya alcanzado a llenar el tanque hasta un nivel de presión por encima del requerido para la salida del aire.

INTERRUPTOR DE REPOSICIÓN DEL ARRANCADOR MAGNÉTICA

Si el motor se apaga debido a una sobrecarga, espere entre 10 y 15 minutos para que el motor pueda enfriarse. Para volver a encenderlo:

1. Coloque la palanca Auto/Off en la posición “Off”.
2. Espere que el motor se enfríe.
3. Presione el botón del reajuste en el arrancador magnético (K).
4. Coloque la palanca Auto/Off en la posición “Auto”.

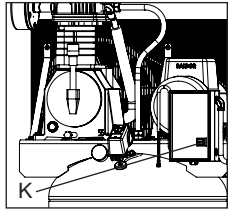

Instalación

Ensamblaje (Fig. 1)

Desembale el compresor de aire. Inspeccione la unidad para verificar que no sufrió daños. Si la unidad ha sido dañada durante el transporte, comuníquese con la empresa transportadora y complete una reclamación por daños. Haga esto de inmediato porque existen limitaciones de tiempo respecto a las reclamaciones por daños.

La caja debe contener los elementos siguientes:

- compresor de aire
- manual del operador y manual de piezas

Verifique el rótulo del número de serie del compresor para asegurarse de que haya recibido el modelo que pidió y que el mismo tenga la presión nominal requerida para el uso deseado.

INSTALACIÓN DE LAS MANGUERAS

⚠***ADVERTENCIA:*** *Riesgo de operación insegura. Sostenga la manguera firmemente con las manos al instalarla o desconectarla para evitar la desconexión repentina de la manguera.*

1. Asegúrese de que el manómetro regulado marque 0 psi.
2. Coloque cinta selladora en las roscas de la manguera.
3. Ensamble la manguera a la salida de aire (D). ***IMPORTANTE:*** No ensamble los separadores directamente a la salida de aire (D).

NOTA: Ensamblar conectores rápidos a las salidas de aire y enchufes de conexión rápida a los extremos de la manguera hace que la conexión y la desconexión de las mangueras sea más simple y fácil. Los conectores rápidos y los enchufes de conexión rápida se pueden comprar en un comercio minorista o en un centro de mantenimiento autorizado.

DESCONEXIÓN DE LAS MANGUERAS

⚠***ADVERTENCIA:*** *Riesgo de operación insegura. Sostenga la manguera firmemente con las manos al instalarla o desconectarla para evitar la desconexión repentina de la manguera.*

1. Asegúrese de que el manómetro regulado marque 0 psi.
2. Retire la manguera de la salida de aire (D).

Lubricación y aceite

COMPRESOR DE AIRE

La bomba del compresor de aire se llenó CON aceite en la fábrica. Controle el nivel de aceite de la bomba del compresor de aire antes de operar la unidad. Consulte **Aceite de la bomba del compresor** en la sección *Mantenimiento*.

Compatibilidad

Las herramientas neumáticas y los accesorios que funcionan con el compresor deben ser compatibles con productos a base de petróleo. Si sospecha que un material no es compatible con productos del petróleo se requiere un filtro de línea de aire que elimine la humedad y el vapor de aceite en el aire comprimido.

NOTA: Utilice siempre un filtro de línea de aire para eliminar la humedad y el vapor de aceite al pulverizar pintura.

Lugar

- Instale el compresor de aire en una zona limpia, seca y bien ventilada.
- Instale el compresor de aire a una distancia no menor de 30,5 cm (12 pulg.) de la pared u otras obstrucciones que pudiesen interferir con el flujo del aire.
- Instale el compresor de aire lo más cerca posible del sitio

de alimentación eléctrica, a fin de evitar el uso de largas extensiones de cableado eléctrico. Las extensiones eléctricas demasiado largas pueden causar una caída de tensión perjudicial para la alimentación del motor.

- El filtro de aire debe mantenerse libre de obstrucciones que pudiesen reducir el flujo del aire al compresor.

ÁREAS HÚMEDAS

En áreas frecuentemente húmedas, se puede formar humedad en la bomba y sedimentos en el aceite, provocando que las piezas se desgasten en forma prematura. Es muy probable que se produzca humedad excesiva si la unidad se ubica en un área sin calefacción, sujeta a grandes cambios de temperatura. Dos signos de humedad excesiva son la condensación externa en la bomba cuando se enfría y un aspecto "lechoso" del aceite del compresor. Puede prevenir la formación de humedad en la bomba aumentando la ventilación u operando la unidad durante intervalos más largos.

CONSIDERACIONES SOBRE EL RUIDO

Consulte a las autoridades locales sobre los niveles de ruido aceptables en su zona. Para disminuir el ruido excesivo, utilice soportes antivibratorios o silenciadores, reubique la unidad o construya cerramientos completos o tabiques divisorios. Póngase en contacto con un centro de mantenimiento DEWALT o llame al 1-888-895-4549 para obtener ayuda.

Anclaje del compresor de aire

⚠ ***ADVERTENCIA:*** **Riesgo de explosión. La vibración excesiva puede debilitar al tanque de aire y causar su explosión. El compresor debe estar montado adecuadamente.**

El compresor de aire DEBE de anclarse a una superficie en cemento sólida y nivelada. Use tornillos tirafondo de 3/8 pulg., pastillas de vibración y anclajes de concreto tornillos para anclajes en cemento. Si necesita ayuda para anclar el compresor de aire, consulte un contratista autorizado.

1. Coloque el compresor de aire sobre una superficie en cemento sólida y nivelada. El cemento debe de estar en buen estado, sin grietas o daños.
2. Marque la superficie utilizando como plantilla, los orificios existentes en el compresor de aire.
3. Perfore la superficie, a fin de penetrar los tarugos para anclaje en el cemento. Coloque los tarugos en el cemento.
4. Haga coincidir la alineación de los orificios de la superficie, con el de las patas del compresor de aire.

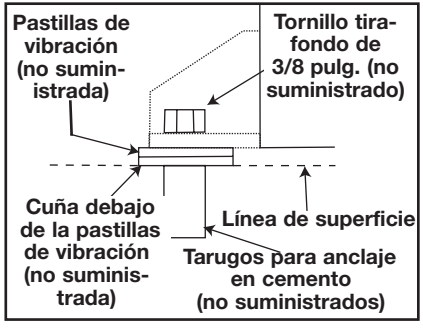

5. Coloque las pastillas de vibración (no suministrada) entre el piso y las patas del compresor de aire, consulte la figura. Si fuese necesario, coloque cuñas sólidas para nivelar la unidad.
6. Coloque los tornillos tirafondo de 3/8 pulg. a través de las patas del compresor de aire y de las pastillas de vibración, hasta llegar a los tarugos de anclaje.
7. Aplique un torque de 9,5-13,5 Nm (7-10 pies-lbs.) al los tornillos tirafondo de 3/8 pulg.

Instrucciones para la conexión eléctrica

⚠ ***ADVERTENCIA:*** *La instalación eléctrica indebida de este*

producto puede anular la garantía y su seguro contra incendios. El cableado de circuitos debe estar a cargo de personal calificado, como electricistas matriculados, que esté familiarizado con los códigos nacionales actuales y los códigos eléctricos locales en vigencia.

⚠***ADVERTENCIA:*** *Riesgo de choque eléctrico. Una conexión a tierra inadecuada puede ocasionar electrocución. Las conexiones eléctricas deben ser efectuadas por un electricista calificado.*

Antes de efectuar las conexiones, un electricista calificado debe conocer lo siguiente:

1. Que el valor promedio del amperaje en la caja eléctrica sea el adecuado. Para obtener dicha información deberá referirse a la hoja de *Especificaciones*.
2. Que la línea de suministro eléctrico tenga idénticas características eléctricas (voltaje, ciclos, fases) que las del motor. Para obtener dicha información deberá referirse a la placa de identificación del motor, ubicada sobre el lateral del mismo.

NOTA: *La conexión eléctrica debe corresponder al mismo voltaje indicado sobre la placa de identificación del motor mas o menos 10%. Para informarse acerca de las extensiones y calibres de cable recomendadas y máxima extensión del circuito, deberá referirse a los códigos locales; un circuito subdimensionado origina una caída elevada del amperaje y un recalentamiento del motor.*

⚠***ADVERTENCIA:*** *Riesgo de choque eléctrico. La conexión eléctrica debe estar ubicada fuera de superficies calientes, tales como silenciadores de escape, tubos de salida de compresores de aire, cabezales o cilindros.*

Instrucciones para Conectar a Tierra

Este artefacto debe conectarse al terminal metálico de un sistema de cableado permanente a tierra para equipos o al terminal del artefacto.

Interruptor principal de alimentación

Instale un interruptor principal de alimentación en la línea que va desde el panel hacia el compresor. El interruptor debe estar ubicado cerca del compresor, para facilitar el uso y la seguridad. Al estar APAGADO, este interruptor desconectará toda alimentación que llega al compresor. Al encenderlo, el compresor arrancará y se detendrá automáticamente, según las indicaciones del interruptor de presión.

Sistema de distribución de aire

⚠***ADVERTENCIA:*** *Riesgo de Explosión. Los tubos de plástico o PVC no han sido diseñados para usarlos con aire comprimido. Independientemente de lo que esté indicado como especificación de presión, las cañerías de plástico pueden explotar debido a la presión del aire. Utilice solamente caños de metal para los ramales de distribución.*

La siguiente imagen representa un sistema típico de distribución de aire. Las siguientes son pautas para tener presente al montar el sistema de distribución del compresor de aire.

NOTA: El aire comprimido de los compresores de aire lubricados de aceite puede contener condensación de agua y emanación de aceite. Puede ser que necesite algunos sumideros, trampas para drenaje y filtros para brindar aire sin usar agua (incluyendo aerosoles) o aceite para pulverizar equipo, dispositivos y herramientas neumáticas que requieren aire filtrado. Lea las instrucciones del

dispositivo o la herramienta neumática que está usando.

- Utilice caño de la misma medida que el de la salida del tanque de aire. Una cañería demasiado angosta restringirá el paso del aire.
- Si la cañería tiene más de 30,5 m (100 pies) de longitud, utilice la medida inmediata superior.
- Entierre la cañería por debajo de la línea de congelamiento y evite huecos en los que la condensación se pudiese acumular y congelar. Efectúe pruebas de presión antes de cubrir la cañería, a fin de asegurarse que todas las uniones de la misma se encuentran libres de fugas.
- Se recomienda de instalar un acoplamiento flexible entre la válvula esférica/salida de descarga de aire y la cañería principal de distribución de aire para permitir vibraciones.
- Se recomienda la instalación de un segundo regulador para el control de la presión del aire. La presión de salida del tanque es - usualmente - demasiado alta para las herramientas individuales de acción neumática.
- NO instale lubricadores entre el tanque y equipo pulverizador, dispositivos o herramientas neumáticas que necesitan aire filtrado sin aceite.
- Drene todos los filtros, trampas para drenaje y columnas de desechos todos los días.

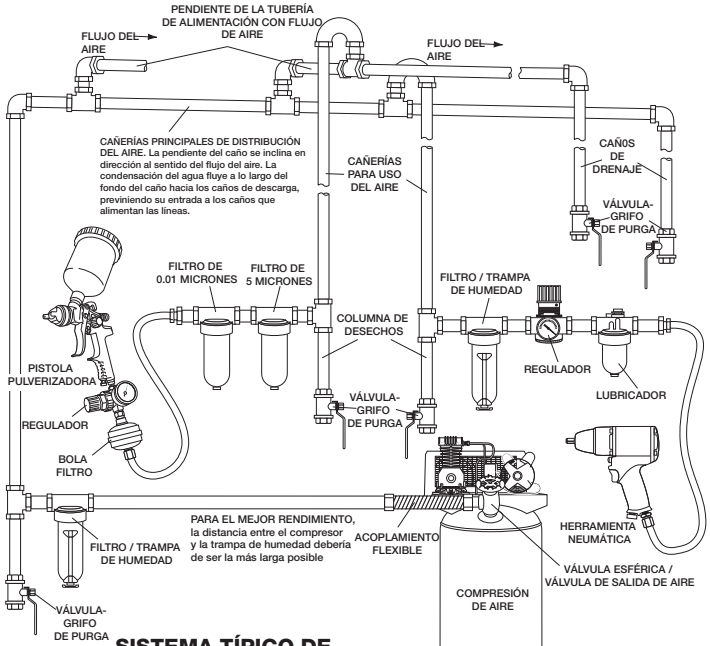

SISTEMA TÍPICO DE DISTRIBUCIÓN DE AIRE

⚠ADVERTENCIA: RIESGO DE EXPLOSIÓN. SIEMPRE USE CONEXIONES Y TUBOS DE METAL.

Cómo utilizar su unidad (Fig 3)

Cómo detenerla

Coloque la posición de la llave interruptora Auto/Off en la posición "Off".

Antes de ponerlo en marcha

⚠***ADVERTENCIA:*** *No opere esta unidad hasta que haya leído este manual de instrucciones de seguridad, operación y mantenimiento.*

Procedimiento de asentamiento

AVISO: *Riesgo de daño a la propiedad. Riesgo daño a la propiedad. Si las siguientes instrucciones no fuesen seguidas estrictamente, podrán ocurrir serios daños.*

Este procedimiento es necesario **antes** de poner en servicio el compresor de aire y cuando la válvula reguladora o la bomba completa del compresor hayan sido reemplazadas.

1. Asegúrese que la palanca Auto/Off se encuentra en la posición "Off".
2. Verifique el nivel de aceite en la bomba. Para recibir instrucciones, lea al párrafo **Aceite** en la sección *Mantenimiento*
3. Vuelva a verificar todas las conexiones. Asegúrese de que todos los cables se encuentren firmes en todos los terminales de sus conexiones. Asegúrese de que todos los contactos se muevan libremente, y que no existan obstrucciones.
4. Abra la válvula de drenaje completamente para permitir que el aire se escape y para impedir que la presión de aire se acumule en el tanque de aire durante el procedimiento de asentamiento.
5. Mueva la palanca Auto/Off a la posición "Auto". El compresor se pondrá en marcha.
6. Haga funcionar el compresor durante 30 minutos. Asegúrese que la válvula de drenaje y todas las cañerías de aire estén abiertas para que se acumule un mínimo de presión de aire dentro del tanque.

NOTA: *Si después de 30 minutos la unidad no opera correctamente, APÁGUELA INMEDIATAMENTE y póngase en contacto con el Centro de Servicio.*

7. Aplicando una solución jabonosa, verifique todas las conexiones / cañerías, a fin detectar fugas de aire. Corrija si fuese necesario. **NOTA:** Pérdidas menores pueden ocasionar una carga adicional de trabajo al compresor, dando como resultado su rotura prematura o una desempeño inadecuada.
8. Verifique la existencia de vibración excesiva. Reajuste o acuñe el pie del compresor, si ello fuese necesario.
9. Después de 30 minutos, coloque el que la palanca Auto/Off to "Off".
10. Cierre la válvula de drenaje.
11. Mueva el botón de Encendido/Apagado (Auto/Off) a la posición "Encendido" (AUTO) y permita que se acumule presión en el tanque. El motor se detendrá cuando la presión del tanque alcance la presión de corte.

Ahora el compresor está listo para usarse.

Antes de cada puesta en marcha

1. Coloque el interruptor Auto/Off en la posición "Off" y cierre el regulador de aire.
2. Cierre la válvula esférica/válvula de salida de aire.
3. Inspeccione visualmente las conexiones y cañerías de aire para ver si hay una fuga.
4. Verifique la sección válvula de seguridad. Consulte el punto **Cómo verificar la válvula de seguridad** en la sección

Mantenimiento.

5. Conecte la manguera y los accesorios.

⚠ADVERTENCIA: Riesgo de operación insegura. Sostenga la manguera firmemente con las manos al instalarla o desconectarla para evitar la desconexión repentina de la manguera

⚠ADVERTENCIA: Riesgo de operación insegura. No utilice los accesorios dañados o usados.

NOTA: DEBE de instalar un regulador si usa dispositivos con una capacidad nominal inferior a 135 psi.

NOTA: Tanto la manguera como los accesorios requerirán un enchufe de conexión rápida si la salida del aire está equipada con un zócalo de conexión rápida.

⚠ADVERTENCIA: *Riesgo de explosión. Demasiada presión de aire podrá ser la causa de riesgo de explosión. Verifique los valores de máxima presión dados por el fabricante de las herramientas neumáticas y los accesorios. La presión de salida del regulador jamás debe exceder los valores de máxima presión especificados.*

⚠ATENCIÓN: *Riesgo de operación insegura. El aire comprimido de la unidad puede contener condensación de agua y emanación de aceite. No pulverice aire no filtrado sobre un artículo que podría dañarse con la humedad. Algunos dispositivos o herramientas neumáticas pueden requerir aire filtrado. Lea las instrucciones del dispositivo o la herramienta neumática.*

Cómo poner en marcha

1. Mueva la palanca Auto/Off a la posición "Auto" y deje que se incremente la presión del tanque. El motor se detendrá una vez alcanzado el valor de presión "de corte" del tanque.
2. Cuando la presión del tanque llega a la presión de “corte”, abra la válvula esférica/válvula de salida de aire.

AVISO: *al utilizar un regulador y otros accesorios, refiérase a las instrucciones del fabricante.*

⚠ADVERTENCIA: *Risk of bursting. If any unusual noise or vibration is noticed, stop the compressor immediately and have it checked by a trained service technician.*

Ahora el compresor está listo para usarse.

Apagado (Fig. 1)

1. **Mueva el interruptor Encendido/Apagado (Auto/Off) hacia la posición Apagado (OFF). NOTA: Si terminó de utilizar el compresor, siga los pasos 2 a 6.**
2. **Retire la manguera y los accesorios.**

⚠ADVERTENCIA: Riesgo de operación insegura. Sostenga la manguera firmemente con las manos al instalarla o desconectarla para evitar la desconexión repentina de la manguera.

3. **Drene el tanque de aire, consulte Drenar el tanque de aire en la sección *Mantenimiento*. Asegúrese de que el manómetro regulado marque 0 psi.**

⚠ADVERTENCIA: Riesgo de explosión. Drene el tanque de aire diariamente. El agua se condensará en el tanque de aire. Si no se drena, el agua corroerá y debilitará al tanque de aire provocando el riesgo de rotura del mismo.

4. **Deje enfriar el compresor.**
5. **Limpie el compresor de aire y guárdelo en un área segura, que no se congele.**

FIG. 3

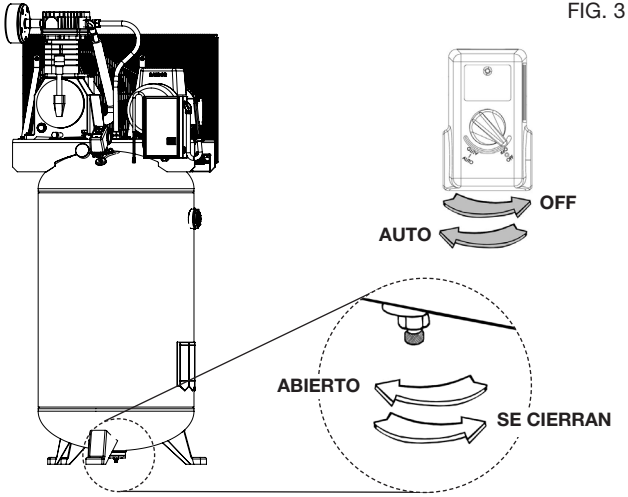

MANTENIMIENTO

Tabla de mantenimiento

Procedimiento	Diariamente	Semanalmente	Mensualmente	1 vez al año o cada 200 horas	Remítase a la etiqueta de advertencia del tanque
Controlar la válvula de seguridad	X				
Inspeccionar el filtro de aire		X+			
Drenar el tanque de aire	X				
Controlar el nivel de aceite de la bomba	X				
Cambiar el aceite de la bomba				X**+	
Inspeccionar si hay pérdidas de aceite	X				
Inspeccionar la correa impulsora	X				
Controlar la tensión de la correa impulsora			X		
Controlar la alineación de la polea y el volante				X	
Controlar ruidos o vibraciones inusuales	X				
Verificar si hay pérdidas de aire	X*				
Limpiar el exterior del compresor		X			
El tanque debe ser dado de baja					X++

* Para verificar si hay pérdidas de aire aplique una solución de agua jabonosa alrededor de las juntas. Mientras el compresor bombea para generar presión y luego de que la presión se corte, vea si se forman burbujas de aire.

** El aceite de la bomba se debe cambiar luego de las primeras 20 horas de funcionamiento. De allí en adelante, cuando utilice para aceite compresores de mezcla sintética sin detergentes aceite para, cambie el aceite cada 200 horas de funcionamiento o una vez al año, lo que ocurra primero.

\+ Más frecuente en lugares con humedad o polvo

++ Para mayor información, llame al 1-888-895-4549.

⚠ ***ADVERTENCIA:*** *Riesgo de operación Insegura. La unidad arranca automáticamente cuando está enchufada. Al hacer el mantenimiento, el operador puede quedar expuesto a fuentes de corriente y de aire comprimido o a piezas movibles. Antes de intentar*

Español

hacer reparaciones, desconectar el compresor del tomacorriente, drenar la presión de aire del tanque y esperar a que el compresor se enfríe.

Para asegurar una operación eficiente y una vida útil más prolongada del compresor de aire, debe prepararse y seguirse un programa de mantenimiento rutinario. El programa de mantenimiento rutinario precedente está diseñado para un equipo que funciona diariamente en un ambiente normal de trabajo. Si fuese necesario, debe modificarse el programa para adaptarlo a las condiciones bajo las cuales se usa su compresor. Las modificaciones dependerán de las horas de operación y del ambiente de trabajo. Los compresores que funcionan en un ambiente sumamente sucio y/u hostil requerirán que hagan todas las inspecciones de mantenimiento con mayor frecuencia.

NOTA: Vea en la sección *Operación* para la ubicación de los controles.

Controlar la válvula de seguridad (Fig. 1)

⚠***ADVERTENCIA***: *Superficies calientes. Riesgo de quemaduras. El posenfriador, el cabezal de la bomba y las piezas circundantes están muy calientes, no los toque (vea las Superficies calientes identificadas en la Fig. 2). Espere hasta que el compresor se enfríe antes de realizar el mantenimiento.*

⚠***ADVERTENCIA:*** *Riesgo de explosión. Si la válvula de seguridad no trabaja correctamente, puede haber sobrepresurización, provocando la rotura del tanque de aire o una explosión.*

⚠***ADVERTENCIA:*** *Riesgo de objetos despedidos. Utilice siempre equipo de seguridad certificado: anteojos de seguridad ANSI Z87.1 (CAN/CSA Z94.3) con protección lateral.*

Antes de arrancar el compresor, tire del anillo de la válvula de seguridad para asegurarse de que la válvula de seguridad trabaja libremente. Si la válvula está atascada o no opera con facilidad, se la debe reemplazar con el mismo tipo de válvula.

FILTRO DE AIRE - INSPECCIÓN Y REEMPLAZO

⚠***ADVERTENCIA:*** *Riesgo de quemaduras. Superficies calientes. El cabezal de la bomba y las piezas circundantes están muy calientes, no los toque (vea las Superficies calientes identificadas en la Fig. 2). Espere hasta que el compresor se enfríe antes de realizar el mantenimiento.*

Un filtro de aire sucio no permitirá que la bomba compresora funcione correctamente a su capacidad plena. Antes de utilizar la bomba compresora, verifique el filtro de aire para asegurarse de que se encuentre limpio y en su sitio.

Si se encontrase sucio, sustitúyalo por un filtro nuevo.

1. **Mueva el interruptor Encendido/Apagado (Auto/Off) (L) hacia la posición Apagado (OFF).**
2. Deje que se enfríe la unidad.
3. Retire la tuerca de mariposa (L).
4. Retire la tapa de metal externa (M).
5. Revise el elemento del filtro (N) si está sucio o lleno de pintura; reemplácelo.
6. Coloque la tapa de metal externa nuevamente sobre el elemento del filtro.
7. Fíjela con la tuerca de mariposa.

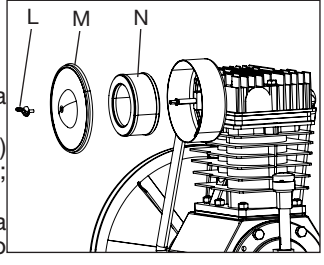

IMPORTANTE: *No opere el compresor sin su filtro de aire.*

CÓMO DRENAR EL TANQUE (Fig. 3)

⚠***ADVERTENCIA:*** *Riesgo de operación insegura. Los tanques*

de aire contienen aire de alta presión. Mantenga la cara y otras partes del cuerpo lejos de la salida del drenaje. Utilice anteojos de seguridad [ANSI Z87.1 (CAN/CSA Z94.3)], ya que al drenar se pueden desprender residuos hacia la cara.

⚠***ADVERTENCIA:*** *Riesgo por ruidos. Utilice protección auditiva [ANSI S12.6(S3.19)], ya que el ruido del flujo de aire es alto durante el drenaje.*

NOTA: *Todos los sistemas de aire comprimido generan condensación que se acumula en cualquier punto de drenaje (por ejemplo, tanques, filtro, posenfriadores, secadores). Esta condensación contiene aceite lubricante y/o sustancias que pueden estar reguladas y que se deben desechar conforme a las leyes y reglamentaciones locales, estatales y federales.*

1. Mueva la palanca Auto/Off a la posición “Off”.
2. Deje purgar el aire lentamente del tanque de aire y del sistema de distribución de aire hasta que la presión del mismo llegue aproximadamente a 20 psi.
3. Drene el agua contenida en el tanque de aire abriendo la válvula de drenaje ubicada en la base del tanque.

⚠***ADVERTENCIA:*** *Riesgo de explosión. El agua se condensa dentro del tanque de aire. Si no se la drena, lo corroerá debilitando sus paredes, poniendo en riesgo la ruptura del tanque de aire.*

AVISO: *Riesgo de daño a la propiedad. Drene el agua del tanque de aire puede contener aceite y óxido, lo que puede provocar manchas.*

4. Una vez drenar el agua, cierra la válvula de drenaje (en sentido horario). Ahora el compresor de aire podrá ser guardado.

NOTA: *Si la válvula de drenaje fuera del tipo enchufe, elimine toda la presión de aire. La válvula podrá entonces ser extraída, limpiada y finalmente reinstalada.*

Aceite de la bomba del compresor (Fig. 4)

AVISO: *Riesgo de daño a la propiedad. Sólo utilice aceite específico para compresores de aire. Los aceites para automóviles de diversos pesos como 10W30 no deben utilizarse para los compresores de aire. Dejan depósitos de carbono en componentes críticos, disminuyendo de esa forma el rendimiento y la vida útil del compresor life.*

NOTA: Utilice aceite para compresores de aire de mezcla sintética sin detergentes.

NOTA: *La capacidad de aceite del cárter del cigüeñal es de aproximadamente 53 onzas fluidas (1,57 litros).*

Verificación

1. El nivel de aceite deberá llegar a la mitad del visor de vidrio (O).
2. En caso de necesidad quite el tapón de llenado de aceite (G) y agregue lentamente aceite hasta alcanzar la mitad del visor de vidrio.

Cambio

⚠***ADVERTENCIA:*** *Drene el tanque a fin de liberar la presión de aire antes de extraer la tapa para el relleno de aceite, o el tapón para drenaje del aceite.*

1. Extraiga el tapón del aceite (G).
2. Extraiga del tapón de drenaje del aceite (H) y drene el aceite en un recipiente adecuado.
3. Reponga el tapón de drenaje del aceite (H) y ajústelo

firmemente.

4. Agregue aceite lentamente al compresor hasta que el nivel alcance la mitad del visor de vidrio (O). **NOTA**: Al llenar el cárter del cigüeñal, el aceite fluye muy lentamente dentro de la bomba. Si el aceite fuese agregado rápidamente rebalsará y aparentará haberse llenado.

AVISO: *Riesgo de daño a la propiedad. Sobrepasar el nivel de aceite causará la falla prematura del compresor. No exceda su llenado.*

5. Reponga el tapón del aceite (G) y ajústelo firmemente.

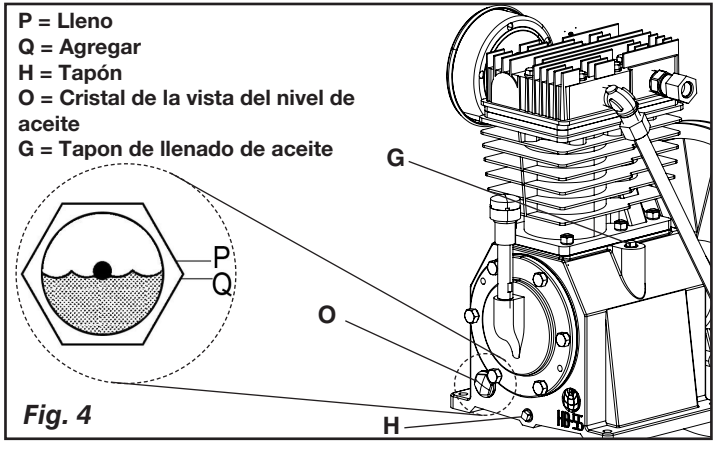

Fig. 4

Correa - Reemplazo

⚠ ***ADVERTENCIA:*** *Esta unidad se enciende automáticamente. SIEMPRE apague el interruptor general eléctrico y purgue toda la presión del sistema antes de reparar el compresor y también cuando el compresor no se esté utilizando. No utilice la unidad si se le han retirado las cubiertas o el protector de la correa. Existe riesgo de lesión grave por contacto con partes móviles. Riesgo de quemaduras. Superficies calientes. El cabezal de la bomba y las piezas circundantes están muy calientes, no los toque (vea las Superficies calientes identificadas en la Fig. 2). Espere hasta que el compresor se enfríe antes de realizar el mantenimiento.*

1. Mueva la palanca Auto/Off a la posición “Off”, desconectar el suministro eléctrico, y liberar toda presión de aire dentro del tanque.
2. Retire la parte delantera del protector de la correa retirando los tornillos y arandelas (R)utilizando un destornillador Torx T25 poco.

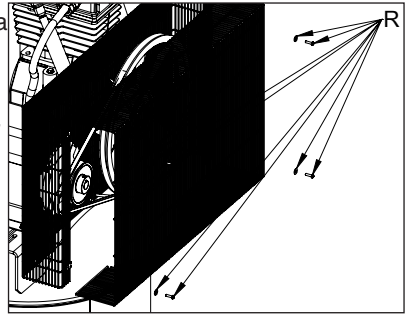

3. Marque la posición de la bomba sobre el montante.
4. Afloje los tornillos montantes del motor y deslice éste hacia el compresor.
5. Retire la correa y reemplácela por una nueva.
6. Vea **Regulación de la tensión de la correa** antes de ajustar los tornillos montantes del motor.

Regulación de la Tensión de la Correa

1. Deslice el motor a su posición original; alinéelo con la marca efectuada antes sobre el montante.

2. Ajuste los dos tornillos exteriores del motor, lo suficiente para sostener a éste en posición hasta verificar la alineación de la polea y el volante.

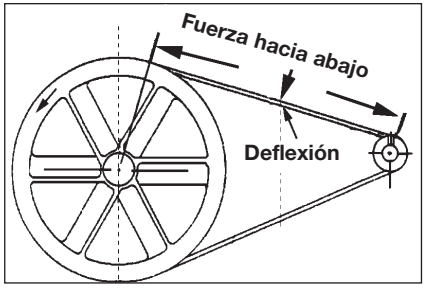

3. La correa debe flexionarse 4,8 mm (3/16 pulg.) en el punto medio de la distancia entre la polea y el volante cuando en ese punto se aplique una fuerza de 4,6 Kg (10 libra).
4. Una vez lograda la tensión adecuada, ajuste los cuatro tornillos montantes. Torsión a 27,1–33,9 Nm (20–25 ft.-lbs.).

NOTA: Una vez que la polea del motor ha sido movida, a partir de su instalación original de fábrica, las ranuras del volante y la polea deben alinearse dentro un rango de variación de 1,6 mm (1/16 pulg.), para prevenir un excesivo desgaste de la correa. Verifique la alineación ejecutando el siguiente procedimiento de alineación polea-volante.

Polea y volante – Alineación

NOTA: *Una vez que la polea del motor ha sido movida, punto de su instalación original de fábrica, las ranuras del volante y la polea deben alinearse dentro un rango de variación de 1,6 mm (1/16 pulg.), para prevenir un excesivo desgaste de la correa.*

El volante del compresor de aire y la polea del motor deben estar en línea (en el mismo plano) dentro de una variación de 1,6 mm (1/16 pulg.), para asegurar la retención de la correa dentro de las ranuras del volante. Para verificar la alineación ejecute los siguientes pasos:

1. Mueva la palanca Auto/Off a la posición “Off”, desconectar el suministro eléctrico, y liberar toda presión de aire dentro del tanque.
2. Dé vuelta al compresor de aire apagado, trabe hacia fuera la fuente de alimentación, y releve toda la presión de aire del tanque del aire.

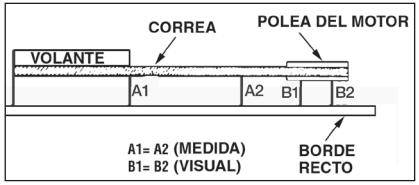

3. Coloque una regla contra el lado exterior del volante y la polea de empuje del motor.
4. Mida la distancia entre el borde de la correa y la regla, en el punto A1-A2 de la figura. La diferencia entre las mediciones no debe ser mayor que 1,6 mm (1/16 pulg.).
5. Si la diferencia es mayor que 1,6 mm (1/16 pulg.), afloje el tornillo de fijación que sostiene la polea propulsora del motor al eje y regule la posición de la polea en el eje hasta que las medidas A1 y A2 se encuentren a 1,6 mm (1/16 pulg.) entre sí.
6. Ajuste los tornillos de fijación de la polea del motor.
7. Verifique visualmente que la polea de empuje del motor esté perpendicular al eje del mismo. Los puntos B1 y B2 de la figura deben parecer iguales. Si así no fuera, afloje el juego de tornillos de fijación de la polea de empuje del motor e iguale B1 y B2, teniendo cuidado de no alterar la alineación de la correa ejecutada en el paso 2.
8. Reajuste los tornillos de fijación de la polea de empuje del motor. Torsión a 16,4–20,3 Nm (145–180 in-lbs.).
9. Reinstale la defensa de la correa.

Válvulas de entrada y salida de la bomba del compresor de aire

Una vez al año haga que un técnico capacitado de servicio inspeccione las válvulas de entrada y salida de la bomba del compresor de aire.

Inspección de las cañerías de aire y las conexiones para detectar fugas

1. Mueva la palanca Auto/Off a la posición “Off”, desconectar el suministro eléctrico, y liberar toda presión de aire dentro del tanque.
2. Aplique una solución jabonosa a todos los acoplamientos de aire y las conexiones / cañerías.
3. Corrija cualquier pérdida encontrada.

IMPORTANTE: *Incluso pérdidas menores, pueden causar una carga adicional de trabajo al compresor, dando como resultado su rotura prematura o una desempeño inadecuada.*

Tornillos del cabezal del compresor de aire. - Torque

Los tornillos del cabezal del compresor de aire deben mantenerse debidamente ajustados. Verifique el torque de los tornillos del cabezal luego de las primeras cinco horas de operación. Reajústelos si fuese necesario. Torsión a 43,4-50,2 Nm (32-37 ft.-lbs.).

Servicio y ajustes

SERVICIO Y AJUSTETODO TIPO DE MANTENIMIENTO Y REPARACIONES NO MENCIONADOS EN ESTE MANUAL, DEBERÁN SER EFECTUADOS POR PERSONAL TÉCNICO ESPECIALIZADO.

⚠***ADVERTENCIA:*** **Riesgo de Operación Insegura. La unidad arranca automáticamente cuando está enchufada. Al hacer el mantenimiento, el operador puede quedar expuesto a fuentes de corriente y de aire comprimido o a piezas movibles. Antes de intentar hacer reparaciones, desconectar el compresor del tomacorriente, drenar la presión de aire del tanque y esperar a que el compresor se enfríe.**

Para reemplazar o limpiar la válvula de retención

1. Libere toda la presión del tanque de aire. Vea **Cómo Drenar el Tanque** en la sección *Mantenimiento.*
2. Mueva la palanca Auto/Off a la posición “Off”, desconectar el suministro eléctrico, y liberar toda presión de aire dentro del tanque.
3. Utilizando una llave regulable, afloje la tuerca del tubo de salida del tanque de aire y la bomba. Retire cuidadosamente la tubería de salida de la válvula de retención.
4. Utilizando una llave regulable, afloje la tuerca del tubo aliviador de presión en el tanque de aire. Retire cuidadosamente la tubería de alivio de presión de la válvula de retención.
5. Desenrosque la válvula de retención girándola hacia la izquierda usando una llave de boca de 7/8 pulg. **TOME NOTA** de la orientación para volverla a ensamblar.
6. Usando un destornillador, empuje con cuidado el disco de la válvula hacia arriba y hacia abajo. **NOTA:**

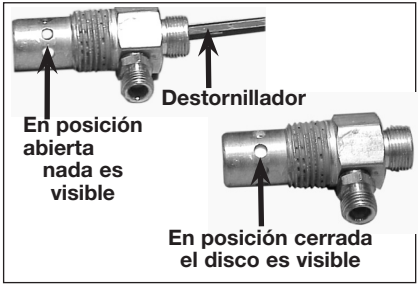

El disco de la válvula debe moverse libremente hacia arriba y hacia abajo sobre un resorte que detiene el disco de la válvula en la posición cerrada. Si no lo hace, la válvula de retención necesita ser limpiada o reemplazada.

7. Limpie o reemplace la válvula de retención. Un solvente, tal como un removedor de pintura o de barniz puede usarse para limpiar la válvula de retención.
8. Aplique sellador a las roscas de la válvula de retención. Vuelva a instalar la válvula de retención (gire a la derecha).
9. Vuelva a instalar la tubería de alivio de presión. Ajuste las tuercas.
10. Vuelva a instalar la tubería de salida y ajuste las tuercas.
11. Ejecute el procedimiento de puesta en marcha. Vea **Procedimiento de Puesta en Marcha** en la sección *Operación.*

Service d'entretien additionnel

Le démontage ou un entretien du compresseur d'air au-delà de ce qui est indiqué dans ce guide ne sont pas recommandés. Si un entretien plus poussé est requis, communiquez avec le Centre de service sous garantie autorisé le plus proche.

ACCESORIOS

Los accesorios que se recomiendan para la herramienta están disponibles para la compra en su distribuidor local o en el centro de mantenimiento autorizado. Si necesita ayuda para localizar algún accesorio para su herramienta, comuníquese llame al 1-888-895-4549 o visite nuestro sitio Web www.dewalt.com.

⚠***ADVERTENCIA:*** *El uso de accesorios no recomendados para utilizar con esta herramienta puede resultar peligroso. Use solamente accesorios con una capacidad nominal igual o superior a la de la compresor de aire.*

Información del servicio técnico

Tenga a mano la siguiente información cuando llame al mantenimiento:
Número del modelo _____ Número de serie _____
Fecha y lugar de compra _____

Reparaciones

Para garantizar la SEGURIDAD y la CONFIABILIDAD, deberán hacerse reparaciones, mantenimiento y ajustes de esta herramienta en los centros autorizados de servicio DEWALT u otras organizaciones autorizadas. Estas organizaciones prestan servicio a las herramientas DEWALT y emplean siempre refacciones legitimas DEWALT.

Garantía limitada

Las herramientas de **DEWALT Industrial Tools** cuentan con garantía desde la fecha de compra.

Garantía limitada de **2 AÑOS** en todos los compresores con lubricación de aceite

Garantía limitada de **1 AÑO** en todos los compresores sin aceite. Esta garantía no es transferible a los propietarios posteriores.

DEWALT reparará o cambiará, sin cargo, a discreción de DEWALT, cualquier defecto debido a material o mano de obra defectuosa. Para mayores detalles sobre la cobertura de garantía e información sobre reparaciones bajo garantía, llame al 1-(888)-895 4549 o visite dewalt.com. Esta garantía no es aplicable a accesorios o daños provocados por reparaciones realizadas o intentadas por terceros. Esta garantía tampoco aplica a mercancía vendida por DEWALT que ha sido fabricada por e identificada como el producto de otra compañía, como los motores a gasolina. En el caso, aplicará la garantía del fabricante, si existe. **CUALQUIER PÉRDIDA, DAÑO O GASTO QUE RESULTE**

INCIDENTAL O INDIRECTAMENTE, O COMO CONSECUENCIA DE ALGÚN DEFECTO, ALGUNA FALLA O AVERÍA DEL PRODUCTO NO ESTÁ CUBIERTO POR ESTA GARANTÍA. Algunos estados no permiten la exclusión de un límite por daños incidentales o derivados, por lo que el límite o la exclusión anterior puede no aplicar a su caso. **LAS GARANTÍAS IMPLÍCITAS, INCLUYENDO AQUELLAS DE COMERCIABILIDAD O ACONDICIONAMIENTO PARA UN FIN DETERMINADO, ESTÁN LIMITADAS A UN AÑO A CONTAR DE LA FECHA DE COMPRA ORIGINAL.** Algunos estados no permiten límites sobre el plazo de duración de una garantía implícita, por lo que el límite anterior puede no aplicar a su caso. Esta garantía le otorga derechos específicos, además de los cuales puede tener otros dependiendo del estado o provincia en que se encuentre.

Qué hará la compañía: (la compañía) cubrirá piezas y mano de obra para corregir defectos importantes en los materiales y en la fabricación durante el primer año de propiedad, con las excepciones que se indican más adelante. Las piezas que se utilizan en la reparación de productos completos o accesorios están garantizadas por el resto del periodo de garantía original.

¿Qué no cubre esta garantía? Si el comprador al menudeo original no instala, mantiene y opera dicho equipo de acuerdo con las prácticas industriales estándar. Las modificaciones al producto o alteraciones a los componentes, o el incumplimiento con las recomendaciones específicas de la Compañía que se establecen en el manual del propietario, anularán esta garantía. La Compañía no será responsable de reparaciones, reemplazos o ajustes al equipo, ni de costos de mano de obra realizada por el comprador sin la aprobación previa por escrito de la Compañía. Los efectos de la corrosión, erosión, condiciones ambientales circundantes, defectos cosméticos y elementos de mantenimiento de rutina, se excluyen específicamente de esta garantía. Los elementos de mantenimiento de rutina, como aceite, lubricantes y filtros de aire, así como los cambios de aceite, filtros de aire, tensión de bandas, etc., son responsabilidad del propietario. Otras exclusiones incluyen: daños durante el flete, fallas originadas por negligencia, accidente o abuso, motores de inducción cuando es operado desde un generador, filtraciones de aceite, fugas de aire, consumo de aceite, acoples con fugas, mangueras, grifos, tubos de purga y tubos de transferencia.

- Los siguientes componentes se consideran artículos de desgaste por el uso normal y no están cubiertos después del primer año de posesión: Correas, roldanas, volantes, válvulas de retención, interruptores de presión, descargadores neumáticos, controles de aceleración, motores eléctricos, escobillas, reguladores, anillos en O, manómetros, tubos, tuberías, acoplamientos, sujetadores, ruedas, acopladores rápidos, empaquetaduras, sellos, carcasas de filtro de aire, anillos de pistón, varillas de conexión y sellos de pistón.
- Los costos de mano de obra, llamadas de servicio y viajes, no están cubiertos después del primer año de propiedad de los compresores estacionarios (compresores sin asas o ruedas). No están cubiertas las reparaciones que requieren horas extraordinarias, tarifas de fin de semana o cualquier otro costo que supere las tarifas por mano de obra estándar del taller.
- Tiempo requerido para la capacitación de orientación con el fin de que el centro de servicio obtenga acceso al producto, o tiempo adicional debido a un egreso inadecuado.
- El daño causado por voltaje incorrecto, cableado inapropiado o el hecho de no hacer que un electricista certificado con licencia instale el compresor, causará la anulación e invalidación de esta garantía.

- Daño causado por un mantenimiento inadecuado del filtro.
- Desgaste de la bomba o daño en la válvula causado por el uso de aceite no especificado.
- Desgaste de la bomba o daño causado por cualquier contaminación del aceite.
- Desgaste de la bomba o daño en la válvula causado por el hecho de no seguir las directrices de mantenimiento apropiadas.
- Utilización con un nivel de aceite por debajo del apropiado o utilización sin aceite.
- Para motores a gas, si el producto está equipado con un motor a gas, consulte en el manual la cobertura de garantía del fabricante para el motor específico.

  Piezas que se compran por separado: las garantías de las piezas que se compran por separado, como bombas, motores, etc., son las siguientes:

A partir de la fecha de compra

- Todas las bombas de una y dos etapas 1 año
- Motores eléctricos 90 días
- Bomba/motor universal 30 días
- Todas las otras piezas 30 días
- No se expedirá una autorización de devolución para los componentes eléctricos una vez que estén instalados.

¿Cómo puede obtener servicio? Con el fin de ser elegible para el servicio bajo esta garantía debe ser el comprador original, y proporcionar comprobante de compra de uno de los distribuidores de la empresa, distribuidores, o las tiendas minoristas de salida. Compresores de aire portátiles o componentes deben ser entregados o enviados, al Centro de Servicio Autorizado más cercano. Todos los costos de flete y los gastos asociados a viajes deben ser pagados por el consumidor. Por favor llame a nuestro número gratuito 1-888-895-4549 para obtener ayuda.

ESTA GARANTÍA LE OTORGA DERECHOS LEGALES ESPECÍFICOS, Y ES POSIBLE QUE TAMBIÉN TENGA OTROS DERECHOS QUE VARÍAN DE UN ESTADO A OTRO.
LA COMPAÑÍA NO HACE REPRESENTACIÓN O GARANTÍA ALGUNA, YA SEA EXPRESA O IMPLÍCITA, A EXCEPCIÓN DE LA DEL TÍTULO DE PROPIEDAD. POR LA PRESENTE, LA COMPAÑÍA NO ASUME NINGUNA GARANTÍA IMPLÍCITA, INCLUIDAS LAS GARANTÍAS DE COMERCIABILIDAD Y DE IDONEIDAD PARA UN PROPÓSITO ESPECÍFICO. SE EXCLUYE TODA RESPONSABILIDAD POR DAÑOS Y PERJUICIOS EMERGENTES O INCIDENTALES EN VIRTUD DE CUALQUIER OTRA GARANTÍA, OTROS CONTRATOS, NEGLIGENCIA U OTROS ACTOS DE AGRAVIO EN LA MEDIDA EN QUE LA LEY LO PERMITA.

REEMPLAZO GRATUITO DE LAS ETIQUETAS DE ADVERTENCIA: Si sus etiquetas de advertencia se tornan ilegibles o faltan, llame al 1-(888)-895-4549 para que se le reemplacen gratuitamente.

⚠ WARNING AVERTISSEMENT ADVERTENCIA	**HOT SURFACES:** To reduce the risk of burns - Do not touch exposed metal surfaces. **SURFACES CHAUDES:** Pour réduire le risque de brûlures - Ne pas toucher aux surfaces métalliques exposées. **SUPERFICIES CALIENTES:** Para reducir el riesgo de sufrir quemaduras - No tocar las superficies metálicas expuestas.	

098-2856

098-3870

⚠WARNING	⚠AVERTISSEMENT	⚠ADVERTENCIA
Before starting, read and understand the operator manual for safe operation and maintenance.	Avant de commencer, prenez le temps de bien comprendre le manuel de l'opérateur pour une utilisation et un entretien sûrs.	Antes de comenzar, lea y entienda el manual del operador para operar y dar mantenimiento a la unidad de manera segura.
Risk of fire or explosion—Do not spray a flammable liquid in a confined area or towards a hot surface. • Spray area must be well ventilated. • Do not smoke while spraying or spray where spark or flame is present. • Arching parts—Keep compressor at least 20 feet away from explosive vapors, such as when spraying with a spray gun.	**Risque d'incendie ou d'explosion**—Ne pas pulvériser de liquide inflammable dans un endroit confiné ou vers une surface chaude. • La zone de pulvérisation doit être correctement ventilée. • Ne pas fumer pendant la pulvérisation et ne jamais pulvériser en présence d'étincelles ou de flammes. • Pièces de voûte - Installer le compresseur à au moins 6 mètres (20 pi) des vapeurs explosives comme lors de l'application de peinture au pistolet.	**Riesgo de incendio o explosión**—No rocíe líquidos inflamables en áreas confinadas ni hacia superficies calientes. • El área donde se va a rociar debe estar bien ventilada. • No fume mientras rocía, ni rocíe en presencia de chispas o llamas. • Partes que pueden producir arco. Mantenga el compresor al menos a 6 metros (20 pies) de distancia de vapores explosivos, como los que se forman cuando se usa una pistola rociadora.
Risk of electric shock—Do not expose to rain. Store indoors. • Use a dedicated circuit. If connected to a circuit protected by a fuse, use time delay (marked D) fuses with this product.	**Risques de choc électrique**—Ne pas exposer à la pluie. Garder à l'intérieur. • Utiliser un circuit distinct. Si l'équipement est connecté à un circuit protégé par fusibles, employer de fusibles de marqué D.	**Riesgo de descarga eléctrica**—No exponga a la lluvia. Almacene en el interior. • Utilice un circuito dedicado. Si se conecta a un circuito protegido con un fusible, utilice fusibles con retardo (marcado D) con este producto.
Risk of bursting—Do not adjust regulator to result in output pressure greater than the marked maximum pressure of attachment. If a regulator has not been installed, use only attachments rated at 200 psi or higher. • Rust weakens tank, may cause explosion and severe or fatal injury/property damage. Drain condensed water from tank after each use to reduce rusting. • Never weld on or repair tank—replace by authorized dealer.	**Risque d'éclatement**—Ne pas régler le régulateur à une pression de sortie supérieure à la pression maximale des accessoires. Si aucun régulateur n'est installé, n'utiliser que des accessoires d'une capacité nominale de 200 psi ou plus. • Les réservoirs affaiblis par la rouille peuvent exploser et entraîner la mort ou de graves blessures et provoquer d'importants dommages. Vidanger l'eau de condensation du réservoir après chaque utilisation afin de réduire la corrosion. • Ne jamais souder ni réparer le réservoir - faire remplacer celui-ci par un centre de service agréé.	**Riesgo de explosión**—No ajuste el regulador de manera que la presión de salida sea mayor que la presión máxima marcada del accesorio. Si no se ha instalado un regulador, use solamente accesorios con presión nominal de 200 psi o más. • La corrosión debilita el tanque, puede causar una explosión y daños materiales graves o lesiones graves o fatales. Drene el agua condensada del tanque después de cada uso para reducir la corrosión. • Nunca solde ni repare un tanque, reemplácelo en un centro de servicio autorizado.
Risk of injury—Do not direct air stream at body. • Disconnect power and drain all air pressure from tank before servicing and after each use. • Do not used compressed air for breathing. • Wear ANSI Z87 approved eye protection. • Do not operate with supplied guards removed.	**Risque de blessure**—Ne jamais diriger le jet d'air vers le corps. • Couper l'alimentation électrique et chasser toute pression d'air du réservoir avant l'entretien et après chaque usage. • Ne pas respirer l'air comprimé. • Porter des verres protecteurs homologués ANSI Z87. • Ne pas faire fonctionner si les capots protecteurs sont enlevés.	**Riesgo de lesiones**—No dirija la corriente de aire hacia el cuerpo. • Desconecte la corriente y libere toda la presión del aire del tanque antes de dar servicio y después de cada uso. • No use aire comprimido para respirar. • Use protección ocular aprobada según ANSI Z87. • No opere sin los dispositivos de protección proporcionados.
RISK OF BURSTING Prevent tank corrosion. After each usage, drain all moisture from tank. **MOISTURE DRAIN** OPEN	**RISQUE D'ÉCLATEMENT** Prévenir la corrosion en drainant toute humidité du réservoir après chaque usage. **ÉVACUATIO N D'EAU** OUVERT	**RIESGO DE EXPLOSIÓN** Prevenir la corrosión del tanque. Después de cada uso drenar toda humedad del tanque. **DESAGÜE DE AGUA** ABIERTO

⚠WARNING 098-3032

For supply connection, use wires acceptable for at least 90°C.

⚠AVERTISSEMENT

Pour la connexion d'alimentation, utilisez des fils pouvant supporter au moins 90 °C.

⚠ADVERTENCIA

La conexión del suministro debe efectuarse con cables homologados para una temperatura de 90 °C o mayor.

CAUTION
ATTENTION
PRECAUCION

To provide proper cooling the compressor must be kept a minimum of 12" (twelve inches) from the nearest wall or obstruction.

Afin d'assurer un refroidissement adéquat, le compresseur doit être situé à au moins 30 cm de tout mur ou obstacle.

Para que la compresora tenga el enfriamiento apropiado, debe mantenerse a una distancia mínima de 30 cm de la pared u obstrucción más cercana.

098-3031

Guía de detección de problemas

Esta sección proporciona una lista de las fallas que se presentan con mayor frecuencia, sus causas y las medidas correctivas correspondientes. El operador o el personal de mantenimiento pueden llevar a cabo algunas de estas acciones correctivas, pero es posible que otras necesiten la asistencia de un técnico DEWALT calificado o de su distribuidor.

Problema	**Código**
Pérdidas de aire	1
Pérdidas de aire en el tanque de aire o en las soldaduras del tanque de aire	2
Pérdidas de aire entre el cabezal y la placa de la válvula	3
Pérdidas de aire de la válvula de seguridad	4
El compresor no suministra suficiente aire para operar los accesorios	1, 5, 6, 7, 9, 10
Entrada restringida de aire..	9
Aceite en el aire de descarga	9, 19, 31
Ruido de golpeteo	4, 10, 11, 12, 13, 14
Desgaste excesivo de la correa	10, 11, 14, 15
Sonidos agudos	10
Humedad en la carcaza de la bomba	1, 3, 8, 17, 18, 19, 20, 21, 22
Consumo excesivo de corriente	14, 23, 24
El compresor no arranca en temperaturas frías	17, 31, 32
Se detiene el compresor	25, 26, 27
Sobrecalentamiento	24, 30, 31

Códigos de detección de problemas

CÓDIGO	CAUSA POSIBLE	SOLUCIÓN POSIBLE
1	Las conexiones no están ajustadas	Ajuste las conexiones en los lugares donde sienta escapes de aire. Controle las conexiones con una solución de agua jabonosa. NO AJUSTE DEMASIADO.
2	Tanque de aire defectuoso.	Se debe reemplazar el tanque de aire. No repare la pérdida. ⚠***ADVERTENCIA:*** *Riesgo de explosión. No perfore, suelde ni modifique el tanque de aire o el mismo se debilitará. El tanque de aire se puede romper o explotar.*
3	Sellos de pérdidas	Comuníquese con un centro de servicio de fábrica DEWALT o con un centro de servicio autorizado DEWALT.
4	Válvula de seguridad defectuosa	Opere la válvula de seguridad manualmente tirando del anillo. Si la válvula aún pierde, debe ser reemplazada.
5	Uso excesivo y prolongado de aire	Disminuya el uso de aire.
6	El compresor no es lo suficientemente grande para el accesorio	Controle los requisitos de aire del accesorio. Si es mayor que el flujo de aire o la presión provista por su compresor de aire, necesita un compresor más grande para operar el accesorio.
7	Agujero en la manguera de aire	Controle y reemplace la manguera de aire de ser necesario.
8	La unidad funciona en lugares húmedos o mojados	Traslade la unidad a un área seca y bien ventilada
9	Filtro de entrada de aire restringido	Limpie o reemplace el filtro de entrada de aire
10	Correa floja	Controle la tensión de la correa, consulte **Ajustar la tensión de la correa** en la sección *Mantenimiento*.
11	Polea suelta	Ajuste el tornillo de fijación de la polea, aplique una torsión entre 16,4–20,3 Nm (145 y 180 libras-pulgadas).
12	Volante suelto	Ajuste el tornillo del volante, aplique una torsión entre 20,3 a 24,4 Nm (15 y 18 libras-pie).
13	Acumulación de carbono en la bomba	Comuníquese con un centro de servicio de fábrica DEWALT o con un centro de servicio autorizado DEWALT.
14	Ajustar la correa	Controle la tensión de la correa, consulte **Ajustar la tensión de la correa** en la sección *Mantenimiento*.

CÓDIGO	CAUSA POSIBLE	SOLUCIÓN POSIBLE
15	Mala alineación de la polea	Consulte **Alineación de la polea y el volante** en la sección *Mantenimiento*.
16	El nivel de aceite de la bomba es bajo	Agregue a la bomba una mezcla sintética de aceite para compresores de aire sin detergente.Consulte **Aceite de la bomba del compresor** en la sección *Mantenimiento*.
17	Aceite tipo detergente utilizado en la bomba	Drene el aceite y vuelva a llenar la bomba con una mezcla sintética de aceite para compresores de aire sin detergente.
18	Ciclos de trabajo extremadamente livianos.	Haga funcionar la unidad en ciclos de trabajo más largos. Se recomienda hacerla funcionar a alta velocidad entre el 50 y el 75% del tiempo de funcionamiento y operarla en marcha en espera el 25% del tiempo de funcionamiento
19	Anillos de pistón dañados o gastados	Comuníquese con un centro de servicio de fábrica DEWALT o con un centro de servicio autorizado DEWALT.
20	Cilindro o pistón dañados o gastados	Comuníquese con un centro de servicio de fábrica DEWALT o con un centro de servicio autorizado DEWALT.
21	Terminación del cilindro del compresor gastada	Comuníquese con un centro de servicio de fábrica DEWALT o con un centro de servicio autorizado DEWALT.
22	Agua en el aceite de la bomba	Drene el aceite y vuelva a llenar la bomba con una mezcla sintética de aceite para compresores de aire sin detergente.
23	Volaje bajo/sobrecarga del motor	CVerifique que el suministro de energía sea el adecuado y que el compresor se encuentre conectado en un circuito exclusivo. Si está usando un cordón prolongador, intente utilizar el equipo sin el mismo. Si el compresor de aire se conecta a un circuito protegido por un fusible, utilice fusibles temporizados de doble elemento (sólo Buss Fusetron tipo “T”).
24	Pasajes de aire restringidos	**Inspeccione y reemplace los tubos de transferencia o la válvula de retención, según sea necesario.**
25	Bajo voltaje al motor	Suministre la energía adecuada.
26	Válvula de retención dañada.	Reemplace la válvula de retención.

CÓDIGO	CAUSA POSIBLE	SOLUCIÓN POSIBLE
27	Bomba tomada	Comuníquese con un centro de servicio de fábrica DEWALT o con un centro de servicio autorizado DEWALT.
28	Nivel de aceite demasiado alto	Reduzca hasta el nivel adecuado. See **Compressor Pump Oil** under *Maintenance.*
29	Mala ventilación	Vuelva a ubicar el compresor en una zona con aire fresco, seco y bien circulado, por lo menos a 30 cm (12”) de la pared más cercana.
30	Superficies de enfriamiento sucias	Limpie muy bien todas las superficies de enfriamiento.
31	Demasiada contrapresión en el tanque	Abra la llave de desconpresión al arrancar el motor.
32	El compresor está demasiado frío	Mueva el compresor a un lugar más cálido.

GLOSARIO

CFM: Pies cúbicos por minuto.

SCFM: pies cúbicos estándar por minuto; unidad de medida de suministro de aire.

PSI: Libras por pulgada cuadrada; una unidad de medida de presión.

Presión de arranque: Mientras el motor está apagado, la presión del tanque de aire cae cuando utiliza un accesorio. Cuando la presión del tanque baja a determinado nivel el motor volverá a encenderse automáticamente. La presión baja en la cual el motor se vuelve a encender automáticamente se llama **presión** de arranque.

Presión de corte: Cuando se enciende o cuando comienza a funcionar un compresor de aire, comienza a elevarse la presión del aire en el tanque de aire. Se eleva hasta determinada presión antes de que el motor se apague automáticamente, protegiendo a su tanque de aire de una presión de aire mayor a su capacidad. La presión alta en la cual el motor se apaga se llama **presión** de corte.

Bien ventilado: Un medio de proveer aire fresco para contrarrestar el escape de gases o los vapores peligrosos.

Circuito dedicado: Un circuito eléctrico reservado para uso exclusivo del compresor de aire.

ASME: American Society of Industrial Engineers.

Indica que los componentes se fabricaron, probaron y examinaron de acuerdo con las especificaciones establecidas por ASME

CSA: La asociación canadiense de los estándares

Indica que los productos que hacen esta marca haber sido fabricados, haber sido probados y haber examinado a los estándares que son fijados por CSA.

La asociación canadiense de los estándares (los E.E.U.U.)

C US Indica que los productos que hacen esta marca haber fabricado, probado y examinado a los estándares que son fijados por CSA. Estos productos también se conforman con el estándar 1450 de U.L..

Código de California: la unidad puede cumplir con las secciones (I) (2)/(M) (2) del Código 462 de California. La etiqueta de especificaciones/modelo se encuentra en el costado del tanque de aire en las unidades que cumplen con el Código de California.

NOTES

NOTES

For product, service or warranty information contact us at:
Para el producto, servicio o información sobre la garantía contacte con nosotros en:
Pour les produits, services ou informations sur la garantie nous contracter à:

1-888-895-4549

www.DEWALT.com

MAT Industries, LLC, Long Grove, IL 60047

Under license from DEWALT Industrial Tool Co.

Bojo licencia de DEWALT Industrial Tool Co.

Sous licence de DEWALT Industrial Tool Co.

The following are trademarks for one or more DEWALT power tools: thee yellow and black color scheme; the “D” shaped air intake grill; the array of pyramids on the handgrip; the kit box configuration; and the array of lozenge shape humps on the surface of the tool.

Las siguientes son características únicas de una o más herramientas eléctricas y accesorios de DEWALT: El esquema de color amarillo y negro, la parrilla de admisión de aire en “D”, la formación de pirámides en el mango, la configuración de la caja de herramientas y la formación de rombos en la superficie de la herramienta.

Vous trouverez ci-après les marques de commerce d’un ou plusieurs outils électriques et accessoires DEWALT. L’agencement de couleurs jaune et noir, la grille d’admission d’air en forme de “D”, la distribution de pyramides sur la poignée, le format du boîter et la matrice complexe de bosses en forme de losanges sur la surface de l’outil.

EVERBILT™

SKU# 546079 561433
Model# PSSP10001EP PSSP07501VD

USE AND CARE GUIDE

SUBMERSIBLE SUMP PUMP

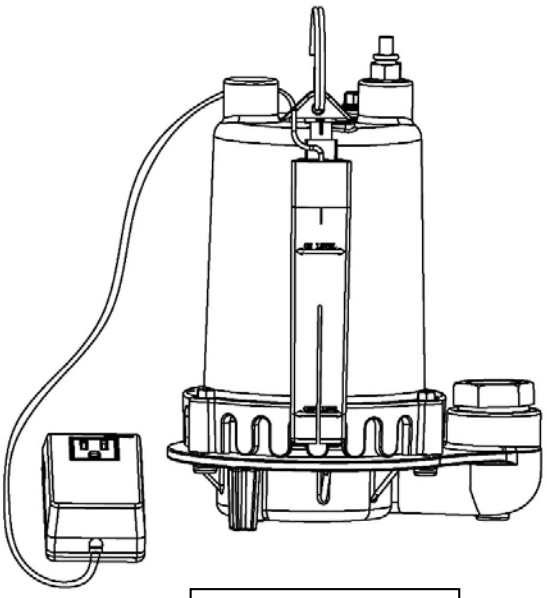

PSSP1001EP

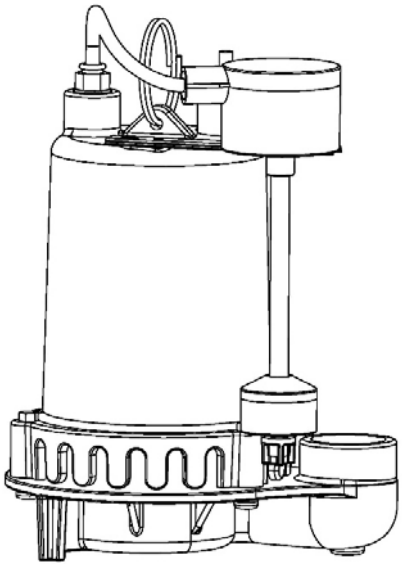

PSSP07501VD

Questions, problems, missing parts? Before returning to the store call
Everbilt Customer Service
8 a.m. - 5 p.m., EST, Monday-Friday

1-877-527-0313

HOMEDEPOT.COM

THANK YOU

We appreciate the trust and confidence you have placed in Everbilt through the purchase of this submersible sump pump. We strive to continually create quality products designed to enhance your home. Visit us online to see our full line of products available for your home improvement needs. Thank you for choosing Everbilt!

Table of Contents

Table of Contents 2
Performance 2
Safety Information 2
Safety Information (continued) 3
Warranty 3
Pre-assembly 4
APPLICATION 4
TOOLS REQUIRED .....
MATERIALS REQUIRED (NOT INCLUDED) .
Pre-assembly (continued) 5
PACKAGE CONTENTS 5
SPECIFICATIONS 5
Assembly 6
Operation 7
Airlock .....
Care and Cleaning 8
Troubleshooting 9

Performance

SKU	HP	GPH of Water @ Total Feet Of Lift						Max. Lift
		0'	5'	10'	15'	20'	25'	
546079	1	5500	5160	4680	4200	3480	2340	30'
561433	3/4	5150	4800	4320	3660	2580	0	25'

Safety Information

DANGER: Do not pump flammable or explosive liquids such as oil, gasoline, kerosene, ethanol, etc. Do not use in the presence of flammable or explosive vapors. Using this pump with or near flammable liquids can cause an explosion or fire, resulting in property damage, serious personal injury, and/or death.

DANGER: ALWAYS disconnect the power to the pump before servicing.

DANGER: Do not touch the motor housing during operation. The motor is designed to operate at high temperatures. Do not disassemble the motor housing.

DANGER: Do not handle the pump or pump motor with wet hands or when standing on a wet or damp surface, or in water.

WARNING: Release all pressure and drain all water from the system before servicing any component.

WARNING: Secure the discharge line before starting the pump. An unsecured discharge line will whip, possibly causing personal injury, and/or property damage.

WARNING: Wear safety goggles at all times when working with pumps.

WARNING: This unit is designed only for use on 115 volts (single phase), 60 Hz, and is equipped with an approved 3-conductor cord and 3-prong grounded plug. Do not remove the ground pin under any circumstances. The 3-prong plug must be directly inserted into a properly installed and grounded 3-prong, grounding-type receptacle. Do not use this pump with a 2-prong wall outlet. Replace the 2-prong outlet with a properly grounded 3-prong receptacle (a GFCI outlet) installed in accordance with the National Electrical Code and local codes and ordinances. All wiring should be performed by a qualified electrician.

WARNING: Protect the electrical cord from sharp objects, hot surfaces, oil, and chemicals. Avoid kinking the cord. Do not use damaged or worn cords.

WARNING: Failure to comply with the instruction and designed operation of this unit may void the warranty. ATTEMPTING TO USE ADAMAGED PUMP can result in property damage, serious personal injury, and/or death.

Safety Information (continued)



CAUTION: Know the pump and its applications, limitations, and potential hazards.



CAUTION: Secure the pump to a solid base. This will aid in keeping the pump in a vertical orientation. This is critical in keeping the pump operating at maximum efficiency. It will also help prevent the pump from clogging resulting in premature failure.



CAUTION: Periodically inspect the pump and system components to ensure the pump suction screen are free of mud, sand, and debris. Disconnect the pump from the power supply before inspecting.



CAUTION: Follow all local electrical and safety codes, along with the National Electrical Code (NEC). In addition, all Occupational Safety and Health Administration (OSHA) guidelines must be followed.



IMPORTANT: The motor of this pump has a thermal protector that will trip if the motor becomes too hot. The protector will reset itself once the motor cools down and an acceptable temperature has been reached. The pump may start unexpectedly if it is plugged in.



IMPORTANT: Ensure the electrical power source is adequate for the requirements of the pump.



IMPORTANT: Before using the pump, check the hose for holes or excess wear, which could cause leaks, and ensure the hose is not kinked or making sharp angles. A straight hose allows the pump to move the greatest amount of water quickly, and also check that all hose connections are tight to minimize leaks.



IMPORTANT: This pump is made of high-strength, corrosion-resistant materials. It will provide trouble-free service for a long time when properly installed, maintained, and used. However, inadequate electrical power to the pump, dirt, or debris may cause the pump to fail. Please carefully read the manual and follow the instructions regarding common pump problems and remedies.

Warranty

The manufacturer warrants the products to be free from defects in materials and workmanship for a period of five years from date of purchase. This warranty applies only to the original consumer purchaser and only to products used in normal use and service. If within one year this product is found upon examination by the manufacturer to be defective in materials or workmanship , the manufacturer's only obligation, and your exclusive remedy, is the repair or replacement of the product at the manufacturer's discretion, provided that the product has not been damaged through misuse, abuse, accident, modifications, alterations, neglect or mishandling. Your original receipt of purchase is required to determine warranty eligibility.

The purchaser must pay all labor and shipping charges necessary to replace the product covered by this warranty.

This Limited Warranty does not cover products which have been damaged as a result of an accident, misuse, abuse, negligence, alteration, improper installation or maintenance, or failure to operate in accordance with the instructions supplied with the products, or operational failures caused by corrosion, rust, or other foreign materials in the system.

Requests for service under this warranty shall be made by returning the defective product to the manufacturer as soon as possible after the discovery of any alleged defect. The manufacturer will subsequently take corrective action as promptly as reasonably possible.

The manufacturer does not warrant and especially disclaims any warranty, whether express or implied, of fitness for a particular purpose, other than the warranty contained herein. This is the exclusive remedy and any liability for any and all indirect or consequential damages or expenses whatsoever is excluded.

Some states do not allow the exclusion or limitation of incidental or consequential damages or limitations on how long an implied warranty lasts, so the above limitations or exclusions may not apply to you. This warranty gives you specific legal rights and you may also have other rights which vary from state to state.

Contact the Customer Service Team at 1-877-527-0313 or visit HOMEDEPOT.COM

Pre-assembly

APPLICATION

The submersible pump is designed for water removal applications. Use this pump only for pumping water. It can drain or remove water from the following: pits, sinks, window wells, basements, swimming pool covers, boats, low spots in yards, or other flooded areas. This pump has not been tested or approved for use in swimming pools or in salt-water marine areas.

This pump is not designed to function as a permanently installed sump pump. It is also not engineered to be run continuously as a "fountain" or "waterfall" pump.

• TOOLS REQUIRED

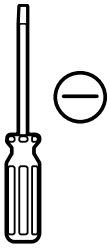

Flathead Screwdriver

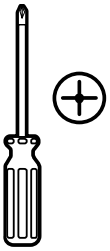

Phillips Screwdriver

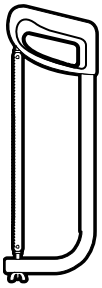

Hand Hacksaw

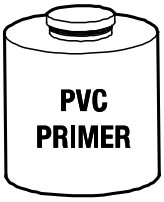





Safety goggles

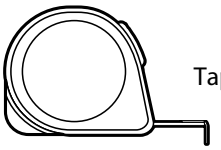

Tape Measure

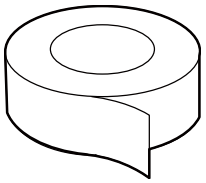

Thread Tape

MATERIALS REQUIRED (NOT INCLUDED)

NOTE: Parts shown below not to scale



1-1/4 in. or 1-1/2 in. discharge pipe

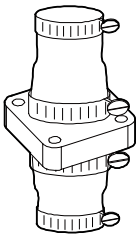

1-1/4 in. or 1-1/2 in. check valve

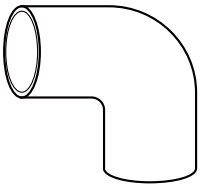

1-1/4 in. or 1-1/2 in. 90° elbow

Pre-assembly (continued)

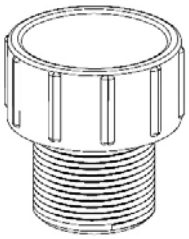

PACKAGE CONTENTS

NOTE: The adapter is not shown to scale.

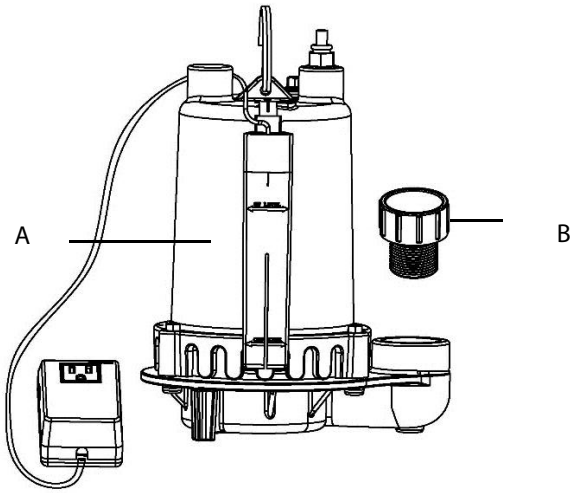

Part	Description
A	Pump
B	1-1/4 in. adapter

SPECIFICATIONS

Power supply	115V, 60 HZ., 15 Amp Circuit
Liquid temp. range	35°F to 77°F(1°- 25°C)
Individual branch circuit required	15A
Discharge size	1-1/2" FNPT or 1-1/4" FNPT (with adaptor)
Sump basin	10 in. (254mm) diameter, 15 in. (381mm) depth

Assembly

CAUTION: Always use the handle to lift the pump. Never use the power cord to lift the pump. To avoid skin burns, unplug the pump and allow time for it to cool after periods of extended use.

1 Adapter Installation

- For 1-1/2” pipe installation, wrap the threads of the 1-1/2 in. with thread tape. Screw the adapter on the pump discharge.
- For 1-1/4” pipe installation, wrap the thread of the 1-1/4 in. adaptor (included). Screw the adaptor on the pump discharge. Install 1-1/4 in. MPTx1-1/4 in. slip adaptor.

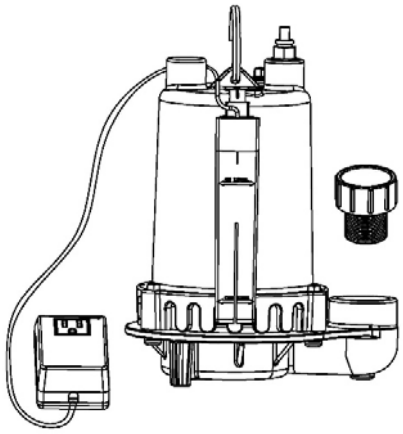

2 Discharge Pipe Connection To Pump

- Attach the discharge pipe to the adapter.

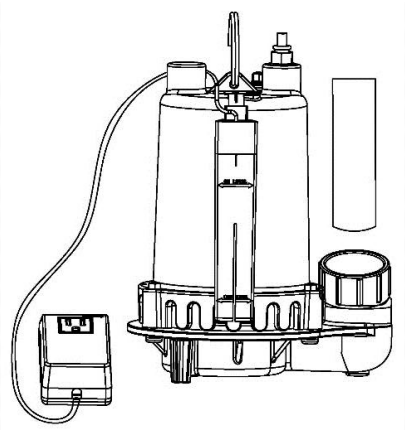

3 Check Valve Connection

- Install a 1-1/2 in. or 1-1/4 in. check valve in the vertical discharge pipe. Be sure the flow is away from the pump.
- Slid down the sump lid.

NOTE: we recommend that the check valve be installed..

4 Discharge Pipe Connection

- Remove the cord grommet from the sump lid and pass the switch plug and power cord plug through the grommet hole.

NOTE: Vertical switch is directly built in the pump. It doesn’t have a plug..

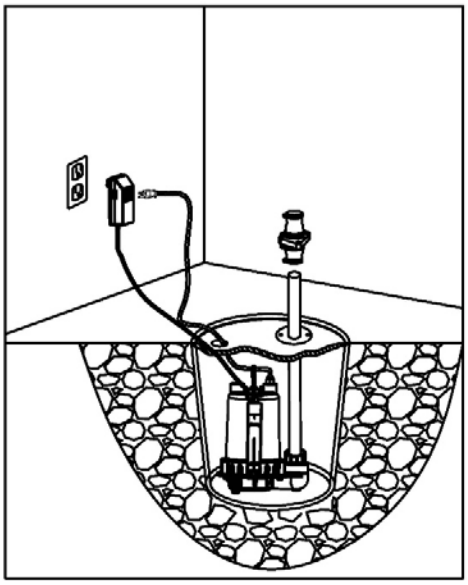

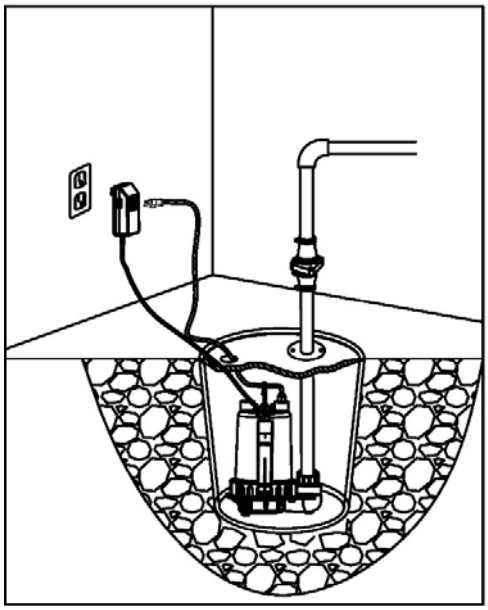

Operation

DANGER: Do not handle pump or pump motor with wet hands or when standing on wet or damp surface, or in water.

Function Verification

- ☐ ☒ Plug the pump power cord plug into the piggyback switch plug outlet.
- ☐
- ☐ ☒ Then plug the switch plug into 115V GFCI power outlet,
- ☐ ☒ Check the pump by filling the sump pit with water and observe the pump’ s operation through one complete cycle. Make sure the pump cannot move in the sump pit and float switch moves freely up and down.
- ☐ ☒ When the float switch moves up over the top of the pump, the pump will start operating. When the water lowers to a certain level, the float switch will turn off the pump.

NOTE: Make certain the pump is submerged in water. Running the pump dry can damage the shaft seal.

-
-
-

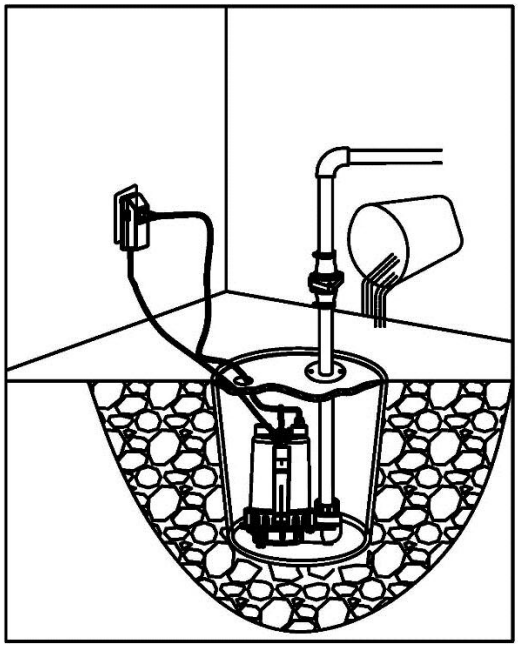

-

Care and Cleaning

CAUTION: Always use the handle to lift the pump. Never use the power cord to lift the pump. To avoid skin burns, unplug the pump and allow time for it to cool after periods of extended use.

Do	Do Not
When the power is disconnected, inspect the pump suction screen and remove all debris, then plug the pump back into the grounded (GFCI) outlet.	Do not disassemble the motor housing. This motor has NO repairable internal parts, and disassembly may cause leakage or dangerous electrical wiring issues. Do not lift up the pump by the power cord.

To clear a pump clogged with debris:

- Unplug the pump from electrical power.
- Unscrew the stainless screws (D), and remove the volute (C).
- Use a flathead screwdriver to hold the shaft (A), then turn the impeller (B) counterclockwise to release the impeller (B).
- Remove debris from around the shaft (A) and on/under the impeller (B).
- Reassemble the pump.

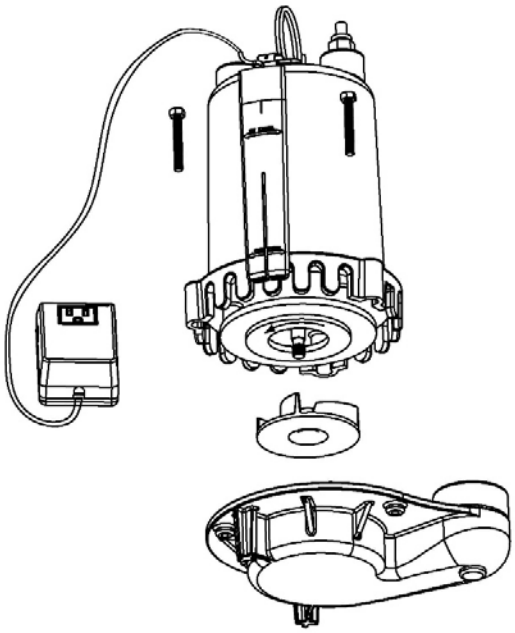

Troubleshooting

Problem	Possible Cause	Corrective Action
Pump does not start or run	1. 1. Blown fuse 2. Tripped breaker 3. Plug disconnected 4. Corroded plug 5. Thermal overload 6. Float switch failed 7. Motor failed	1. Replace fuse 2. Reset breaker 3. Secure plug 4. Clean plug prongs 5. Unplug for 30 minutes, then plug in 6. Directly plug the power cord into the power source outlet. If the pump works, the switch must be faulty. Replace switch. 7. Directly plug the power cord (skip switch) into the power source outlet. If the pump doesn't work or motor is humming, the motor must be faulty. Replace pump.

Pump operates but pumps little or no water	1. Screen blocked 2. Debris caught in the impeller or discharge 3. Impeller loose on shaft Impeller broken	1. Clean screen 2. Remove debris 3. Reassemble impeller Replace impeller
Pump starts and stops too often	1. Backflow of water from piping or check valve leaking 2. Tangled switch 3. Float Switch failed	1. Install a check valve or replace the check valve 2. Reposition the pump and make sure the switch moves freely 3. Replace switch
Pump will not shut off	1.Tangled switch 2.Faulty float switch 3.Float obstructed	1.Reposition the pump and make sure the switch moves freely 2.Replace switch 3.Remove obstruction



Questions, problems, missing parts? Before returning to the store call
Everbilt Customer Service
8 a.m. - 5 p.m., EST, Monday-Friday

1-877-527-0313

HOMEDEPOT.COM

PENNBARRY

Date/Time: 05/16/2017 **Tag:** EF-1
Job: LABELLA FAN **Company:** RF PECK
Project: **Sales Person:** JOBE KELLY

DX11Q

Aluminum Exhaust Roof Ventilator

Quantity: 1
Special: None

Dimensions

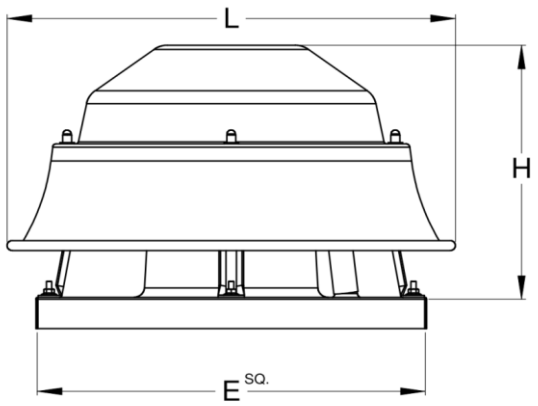

Unit Size	Motor Tap	E	H	L
11	Q	18.5	13.38	20.88

Ro	Weight
11.5	40

Standard Construction Features

- Spun aluminum housing
- Backward inclined centrifugal aluminum wheel
- Birdscreen
- Aluminum pre-punched curb cap with welded corners
- Oversized electrical conduit
- Plug-Disconnect and pre-wired junction box (1-speed ODP motors up to 3/4 HP)
- Direct drive (Open/TE) motors include overload protection as standard
- Corrosion resistant fasteners

Accessories

Drive Type: D - Direct
Motor RPM: 1 - Single Speed
Efficiency: S - Standard
AMCA Classification: C - "C" AL LN/PL
Screen: B - Bird Screen
Aluminum Base: A - Aluminum Base
Speed Controller: L - Loose (not mounted)

Performance

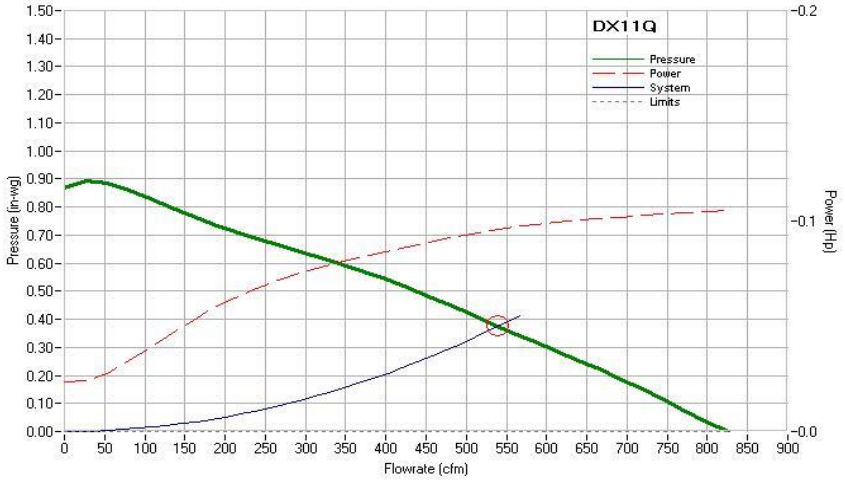

Operating Point	
Volumne (CFM)	540
Static Pressure (in. wg)	0.38
Fan RPM	1428
Horse Power (BHP)	0.10
Elevation (ft)	0
Temperature (°F)	70
Drive Los (%)	N/A

Motor Information	
Motor HP	0.20 - 1/5 HP
Volt/Ph/Hz	115V /1/ 60
Enclosure	O - ODP
NEC FLA*	0
Weight+ (lbs)	C/F

* NEC FLA - based on tables 430.248 or 430.250 of National Electrical Code 2014. Actual motor FLA may vary depending on motor manufacturer.
+ Motor weight may vary depending on supplier

(continued)

SOUND POWER

OCTAVE POWER CENTER FREQUENCY (hz)

63	125	250	500	1000	2000	4000	8000
68	75	66	57	56	54	48	39

LWA	Dba	Sones
64	52.5	6.8

LwA - Weighted sound power, based on ANSI S1.4, dBA - Weighted sound pressure, based on 11.5 dB attenuation per Octave band at 5 ft. Sones - calculated using AMCA 301 at 5 ft.

PENNBARRY

Date/Time: 05/16/2017 **Tag:** EF-1
Job: LABELLA FAI **Company:** RF PECK
Project: **Sales Person:** JOBE KELLY

UG12

Prefabricated Heavy-gauge steel Roof Curbs

Quantity: 1
Special: None

Product Image

UG12

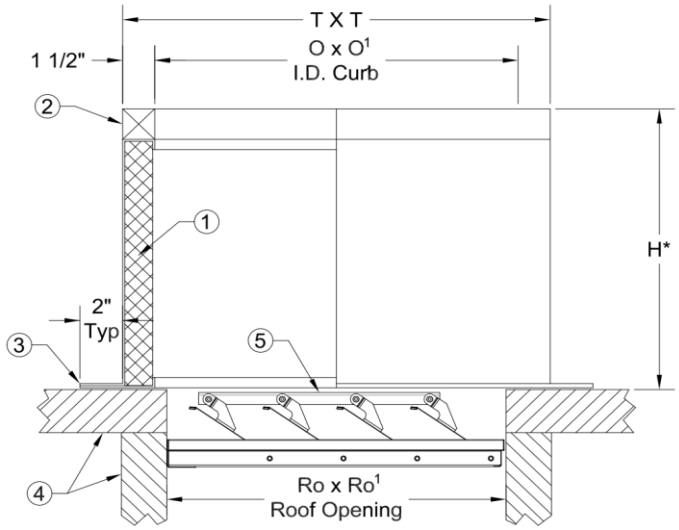

- Heavy-gauge steel with welded corner seams shall cover 1-1/2" thick 3 lb. density fiberglass insulation.
- A 1-1/2" wide wood nailer (Unibeam) with top surface is provided for fan installation and/or roofing paper.
- Flat (single or double pitch optional) curb fastening flange shall be Cantless.
- Optional vented sides available without fiberglass insulation.

T	T1	O	O1	H	RO	RO1
17	17	14	14	12	11.5	11.5

Options or Accessories Listing

Curb Parent DX11Q

Wood Nailer W - Wooden Nailer

Product Notes

1. 1 1/2" Rigid Fiberglass Insulation
2. Wood Nailer
3. Curb Fastening Flange
4. Roof Structure - By Others
5. Backdraft Damper – Optional

Schedule

ID	Quantity	Tag	Curb Dim1	Curb Dim2	Roof Pitch Dim by 12
1	1	EF-1	17	17	0

geotech

AR4

4”Auto-Reclaimer

Installation and Operation Manual



Rev 11/26/13 Part # 16600115

Table of Contents

SECTION 1: SYSTEM DESCRIPTION 2

FUNCTION AND THEORY 2
SYSTEM COMPONENTS 3

SECTION 2: SYSTEM INSTALLATION 4

SECTION 3: SYSTEM OPERATION 5

SECTION 4: SYSTEM SPECIFICATIONS 6

SECTION 5: SYSTEM SCHEMATICS 7

SECTION 6: REPLACEMENT PARTS 8

REPLACEMENT PARTS DIAGRAM 8

..... 8

AR4 REPLACEMENT PARTS LIST 10
AR4 PUMP MODEL LIST 10

SECTION 7: SYSTEM MAINTENANCE 11

MAINTENANCE SCHEDULE 11
DISASSEMBLY INSTRUCTIONS 11
Housing and Bottom Cap 11
Float 12
Control Rod/ Valve Assy. 13

SECTION 8: SYSTEM TROUBLESHOOTING 14

DEPLOYING MULTIPLE PUMPS 15

THE WARRANTY 17

EQUIPMENT RETURN POLICY 17

EQUIPMENT DECONTAMINATION 17

Section 1: System Description

Function and Theory

The Geotech 4" Auto-Reclaimer (AR4) is an automatic and controllerless, positive air-displacement pump that works without the use of any external controls, relays, bleeder tubes or bubblers. The AR4 requires only a regulated standard industrial compressed air source to operate.

The AR4 is a fixed intake, automatic total fluids recovery pump which can recover fluids from depths of up to 250ft. Based on specific site requirements, the AR4 is offered in three lengths; short, long, and extended (Ext) each of which can be ordered to accommodate fluid intake with a top screen inlet, a 4" bottom screen, a flat bottom screen, or any combination of top and bottom. Intake screens allow for pumping fluid with up to 1/8" diameter suspended particles.

The AR4 can also operate under both positive and *negative (vacuum) pressure environments. The pump is designed to self-adjust the discharge flow rate automatically to match individual well recharge rates (up to the pumps maximum flow rate based indivisual site conditions).

*Vacuum conditions may require a Vacuum Equalizer if venting out of the recovery well. Contact your Geotech Technical Sales representative for more information.



Figure 1-1

System Components

The AR4 pump series share the same internal mechanics and pump options. The diagram below shows the major components to an AR4.

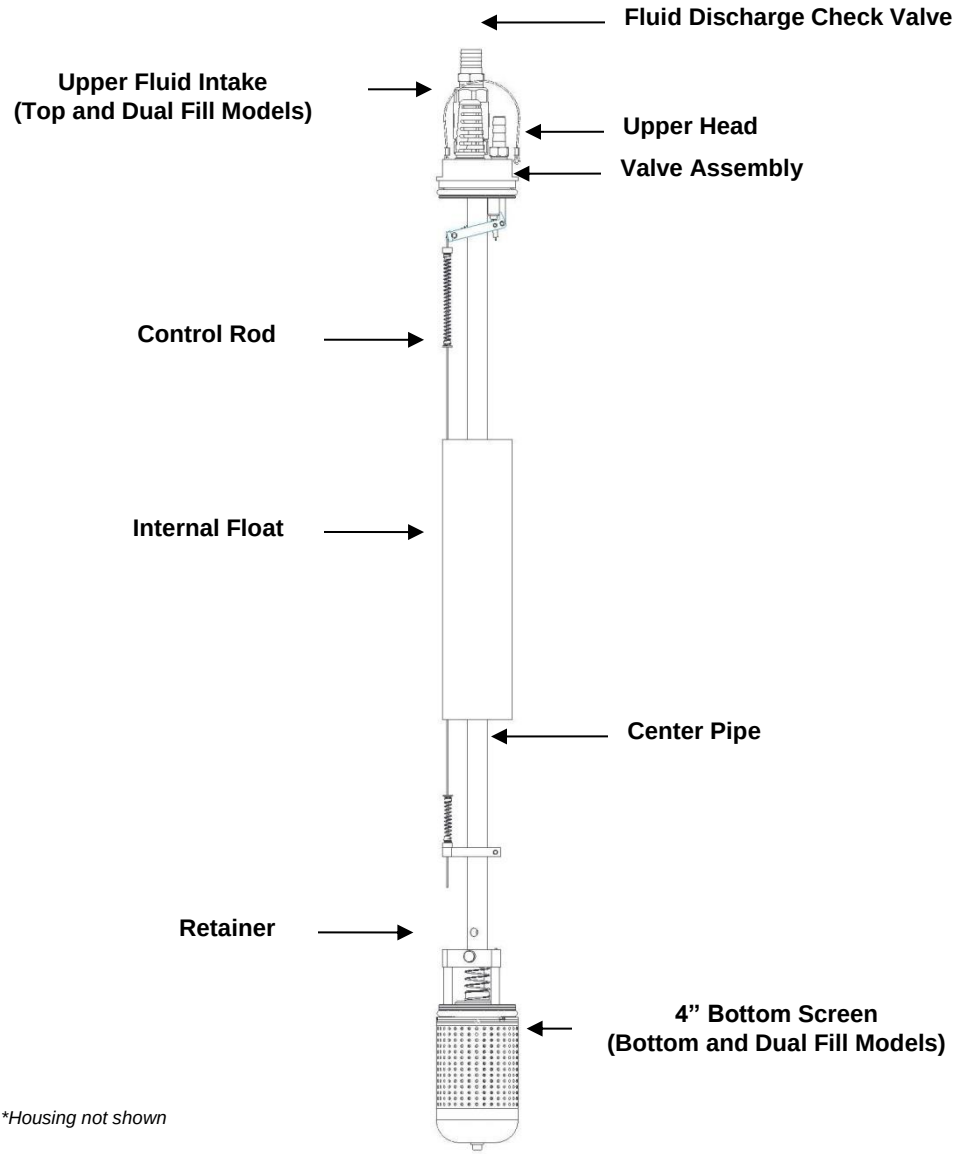

Figure 1-2

AR4 model: 86600149 – AR4,SHORT,T&4"B

Section 2: System Installation

Attach the Air (A), Vent (V), and Discharge (D) hoses/tubing to their appropriate labeled fittings (see Figure 2-1). Ensure that all hoses are installed securely and completely. Top filling AR4 pump models have a screened inlet in the Fill (F) port; bottom fill only pumps will have this port plugged.

Attach the pump suspension cable to the pump head hanger cable and lower pump into well. Suspension cable should be centered with the pump head and not wrapped around any of the fittings or tubing.

Lower the pump into the well so that the appropriate intake(s) becomes submerged below static groundwater conditions. Figure 2-2 and 2-3 show system schematics and minimum fluid depths required for top and bottom inlet Short pump models.

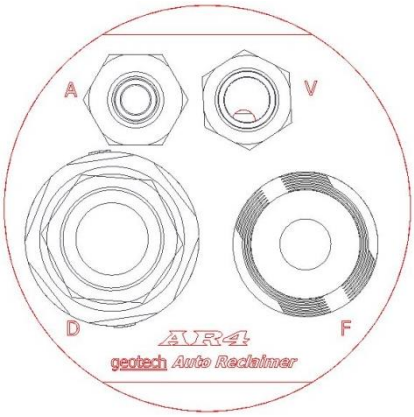

Figure 2-1

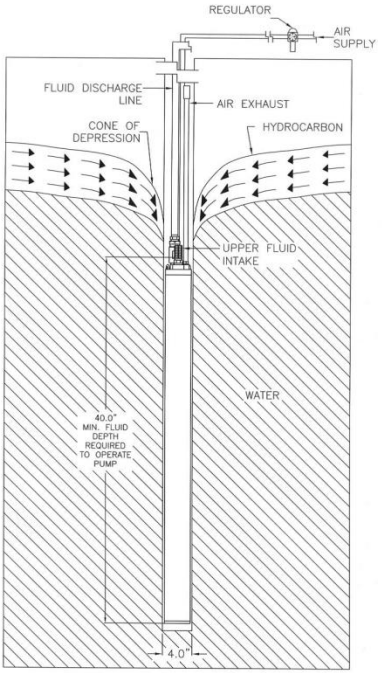

Figure 2-2
Top Fill

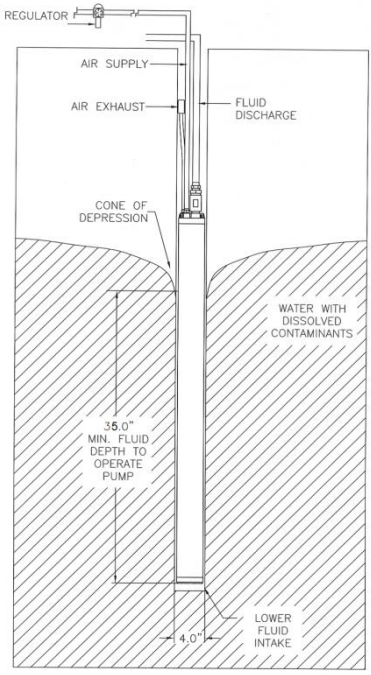

Figure 2-3
Bottom Fill

Section 3: System Operation

The AR4 pump is lowered in a recovery well so that the fluid intake (top, bottom or dual fill) are sufficiently submerged below the static groundwater level. Provided with a regulated air supply, the pump cyclically fills and empties. As the pump fills, the internal float assembly rises until engaging the control lever which operates the valve mechanism. When the control lever shifts up, the air valve opens and the pump begins to pressurize, closing any inlet check valves and displacing fluid out the discharge pipe. As the water is discharged from the pump, the float assembly lowers, shifting the control lever down and closing the air supply valve and opening the vent valve. The pressurized air exits through the air exhaust tube, allowing the pump to refill and begin a new cycle. This cyclic operation continues automatically as fluid is drawn into the well. Regulated compressed air is utilized in this system as an on demand supply.

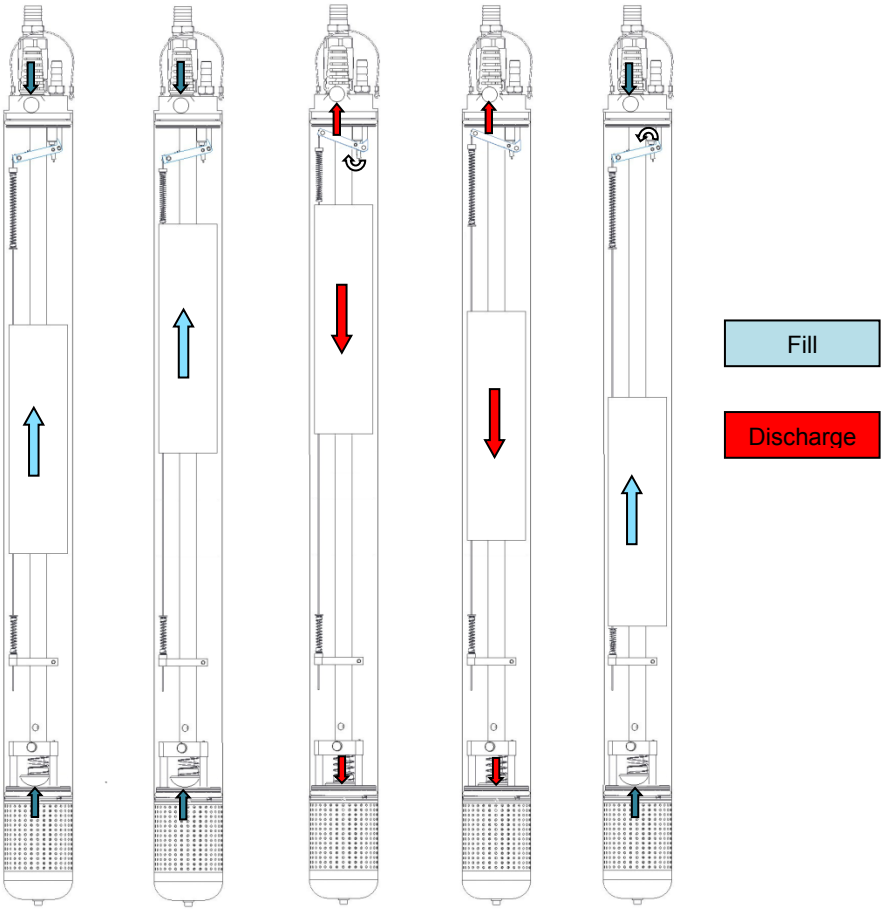

Section 4: System Specifications

AR4 PUMP SPECIFICATIONS

Size	Short			Long			Extended		
Fluid Inlet	Top	Bottom	Dual	Top	Bottom	Dual	Top	Bottom	Dual
Diameter	3.5 in. (8.89cm)								
Length	44in. (112cm)	48in. (122cm)	48in. (122cm)	56in. (142cm)	60in. (152cm)	60in. (152cm)	68in. (173cm)	72in. (183cm)	72in. (183cm)
Max Flow @ 10' sub. - 100 psi	4.3gpm (16.3pm)	6.0 gpm (22.7 lpm)	6.2 gpm (23.5 lpm)	4.3gpm (16.3pm)	6.0 gpm (22.7 lpm)	6.2 gpm (23.5 lpm)	4.3gpm (16.3pm)	6.0 gpm (22.7 lpm)	6.2 gpm (23.5 lpm)
Maximum Depth	250 ft. (76.2m)								
Actuation Level	40in (102cm)	12-35in (30-89cm)	12-35in (30-89cm)	52in. (132cm)	47 in. (125cm)	47in. (125cm)	64in. (163cm)	59in. (150cm)	59in. (150cm)
Air Pressure	100 PSI Max								
Air Consumption	.43-1.6 SCF/GAL								
Common Fluids	Landfill lechate,diesel, gasoline, JP1-JP6,#2 heating oils, BTEX, MTBE ,ground water								
pH Range	4-9								
Max. Temperature	100°C (212° F)								
Min. Density	.7 SpG								

Tube & Hose Fittings		Pump Materials	
Fitting sizes on pump head (FPT)		Pump housing/body	FRP
Air	3/8	Pump ends	SS316
Vent	3/8	Internal Component	SS316, PTFE, PVDF, FPM
Discharge	3/4	Bottom Intake	PTFE
Top Fill	1	Top intake check ball	PTFE
Fitting Type	Hose barbs	Bottom intake check ball	PTFE
Tube or Hose Fittings	Brass / Stainless Steel	Discharge check ball	PTFE
Tubing Material	Nylon	O-ring seals	FPM
Liquid discharge OD (in.)	1	Air inlet check ball	FPM
Air supply OD (in.)	1/2	Vent Seat	FPM
Vent / Air exhuast OD (in.)	1/4	Float	HDPE
Hosing Material	Nitrile	Top Intake Material	PVDF
Liquid discharge ID (in.)	3/4	Control Rod	SS316
Air supply ID (in.)	3/8	Valve Manifold	PVDF
Vent / Air exhuast ID (in.)	1/2		

Section 5: System Schematics

The AR4 is offered in three pump lengths. Activation levels vary depending on inlet options and pump length. Fluid levels will trip valve mechanics when water reaches ¾ the length of the float. Low activation (Short) pumps can be preset to custom activation levels as low 12”. Measurements below are shown with a bottom screen. Adjust measurements by reducing 5” if using a flat bottom intake or top fill only AR4.

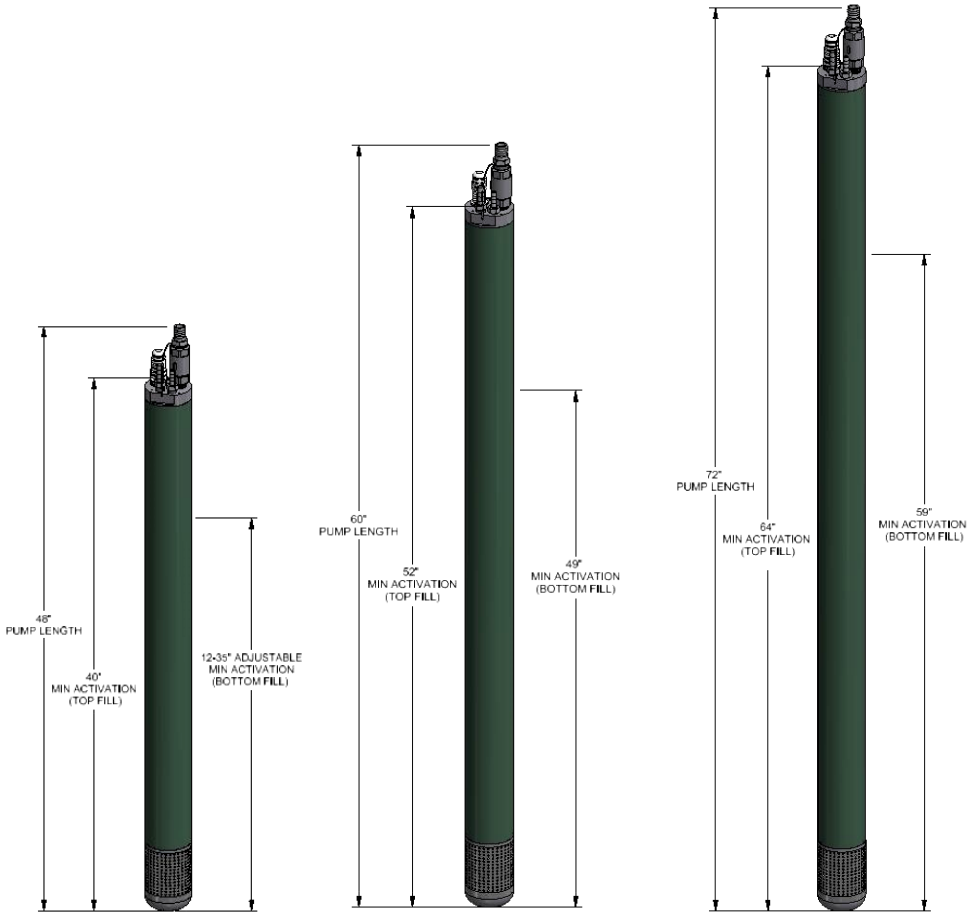

Short **Long** **Ext**

Figure 5-1

Section 6: Replacement Parts

Replacement Parts Diagram

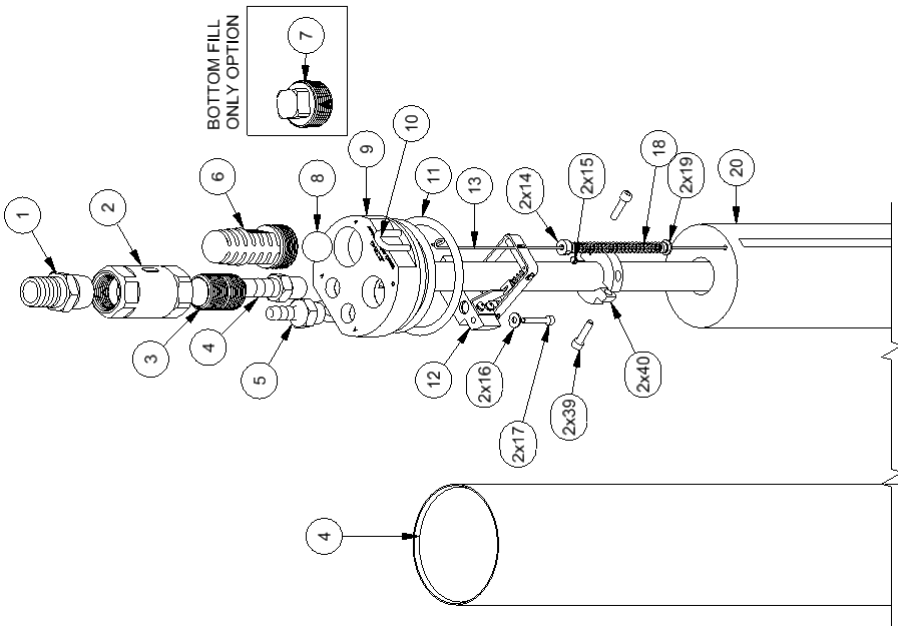

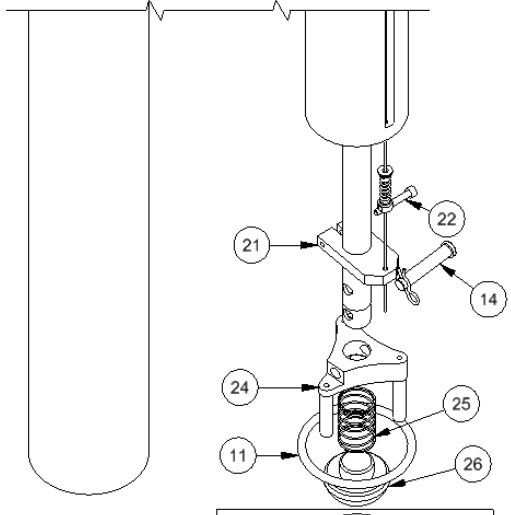

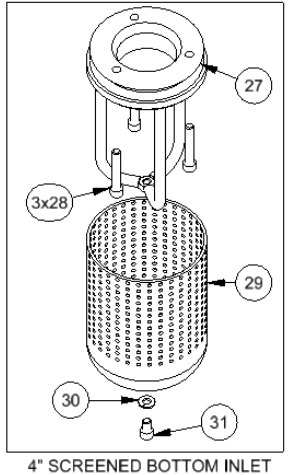

4" SCREENED BOTTOM INLET

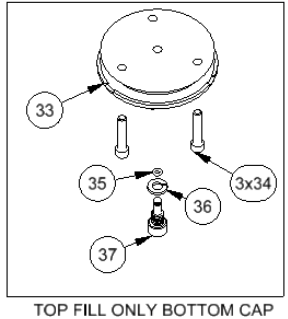

TOP FILL ONLY BOTTOM CAP

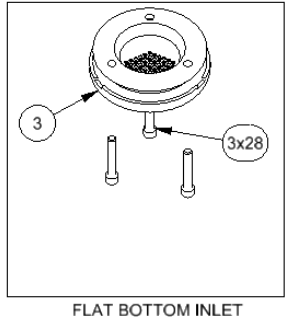

FLAT BOTTOM INLET

AR4 Replacement Parts List

ITEM	DESCRIPTION	PART NO.	ITEM	DESCRIPTION	PART NO.
1	HOSEBARB,SS6,3/4 X 3/4MPT	16600218	20	FLOAT,HDPE,4IN AR	26600234
2	CHECK VALVE,SS6,PTFE,3/4"FPT	16600268	21	GUIDE,CONTROL ROD,PVDF,4IN AR	26600231
3	NIPPLE,SS6,3/4MPTX1-1/2"	16600267	22	SCREW,SS6,10-32X1.25",SHCS	16600269
4	HOSEBARB,SS6,1/2X3/8MPT	16600217	23	PIN,CLEVIS,3/8",SS6	16600303
5	HOSEBARB,SS6,3/8X3/8MPT	16600213	24	WELDMENT,RETAINER,LOWER INTAKE,4IN AR	56600079
6	SCREEN ,INLET,TOP,PVDF,4IN AR	*26600252	25	SPRING,CHECK BALL,SS6,4IN AR	*16600285
7	PLUG,SQUARE HEAD,SS6,1"NPT	*16600298	26	PLUG,CHECK,LOWER INTAKE,PTFE,4IN AR	*26600245
8	BALL,PTFE,7/8"	*16600098	27	WELDMENT,SUPPORT,SEAT,LOWER INTAKE,4IN AR	*56600080
9	WELDMENT,HEAD,PIPE,SHORT,4IN AR	*56600078	28	SCREW,VITON,SS6,1/4-20X1-1/2",SELF SEALING,SHCS	*16600286
	WELDMENT,HEAD,PIPE,LONG,4IN AR	*56600081	29	WELDMENT,SCREEN,DOME,LOWER INTAKE,4IN AR	*16600293
	WELDMENT,HEAD,PIPE,LONG,4IN AR	*56600082	30	WASHER,LOCK,SS6,3/8"	*16600300
10	HARNESS, SAFETY, 4IN AR	56600084	31	SCREW,SS6,1/4-20X3/8",SHCS	*16600297
11	ORING,#411,VITON	16600287	32	HOUSING,FRP,SHORT,4IN AR	*26600230
12	ASSY.,VALVE, 4IN AR	56600083		HOUSING,FRP,LONG,4IN AR	*26600249
13	ROD,CONTROL,SS6,SHORT,4IN AR	*26600235		HOUSING,FRP,EXT,4IN AR	*26600256
	ROD,CONTROL,SS6,LONG,4IN AR	*26600257	33	CAP,LOWER,SS6,BLANK,4IN AR	*26600248
	ROD,CONTROL,SS6,EXT,4IN AR	*26600258	34	SCREW,VITON,SS6,1/4-20X1-1/4",SELF SEALING,SHCS	*16600302
14	COLLAR,SHAFT,SS6,4IN AR	26600233	35	ORING,#007,VITON	*16600301
15	SCREW,SS6,10-32X3/16,CUP POINT, SET	16600270	36	WASHER,LOCK,SS6,1/4"	*16600295
16	WASHER,SS6,#8,3/8"OD	16600275	37	DRAIN,FLAT BOTTOM,SS6,3/8",4IN AR	*26600259
17	SCREW,SS6,8-32X1",SHCS	16600274	38	CAP,INTAKE,LOWER,SS6,FLAT BOTTOM, 4IN AR	*26600253
18	SPRING,SS6,UPPER,CMPRSN	16600215	39	SCREW,SS6,1/4-28X3/4",SHCS	16600318
19	STOP,SPRING,SS6,4IN AR	26600232	40	COLLAR,FLOAT STOP,SS,4IN AR	16600307

** Parts not included with all pump models*

AR4 Pump Model List

Description	Part No.	Description	Part No.
AUTO RECLAIMER, 4", SHORT, T&4"B	86600149	AUTO RECLAIMER, 4", LONG, 4"B	86600158
AUTO RECLAIMER, 4", SHORT, T&B	86600152	AUTO RECLAIMER, 4", LONG, B	86600159
AUTO RECLAIMER, 4", SHORT, T	86600153	AUTO RECLAIMER, 4", EXT, T&4"B	86600160
AUTO RECLAIMER, 4", SHORT, 4"B	86600154	AUTO RECLAIMER, 4", EXT, T&B	86600161
AUTO RECLAIMER, 4", SHORT, B	86600151	AUTO RECLAIMER, 4", EXT, T	86600162
AUTO RECLAIMER, 4", LONG, T&4"B	86600155	AUTO RECLAIMER, 4", EXT, 4"B	86600163
AUTO RECLAIMER, 4", LONG, T&B	86600156	AUTO RECLAIMER, 4", EXT, B	86600164
AUTO RECLAIMER, 4", LONG, T	86600157		

** Contact your Geotech Sales representative for custom AR4 pump lengths and options*

Section 7: System Maintenance

Maintenance Schedule

Annually it is recommend that the AR4 is pulled from the well for inspection and cleaning to maximize efficiency and pump performance. Depending on the site conditions routine maintenance may be needed on a more frequent basis.

Disassemble pump by removing the bottom cap and housing. Internal components can be removed from center pipe with standard hex keys. Further disassembly instruction can be found in the next section.

- Clean any residue or sediment build up on float, housing, and center pipe. Reducing friction or "sticky" spots along the float's travel can be extremely beneficial to your pumps performance.
- Ensure that the control lever shifts smoothly between up and down positions. Remove Orings and check balls, and inspect check seat for unwanted buildup or debris.
- Replace control rod if bent or if there are signs of wear at lever interface.
- Inspect inlet and discharge check valves for wear spots and or sediment build up.
- Apply a calcium sulfonate grease to all bearing surfaces of valve assembly.

Disassembly Instructions

<u>Housing and Bottom Cap</u>

Use a 3/16" hexkey to remove the lower cap from the pump by unscrewing three 1/4" socket head cap screws (SHCS) from the lower end of the pump (4" screened bottom intake pumps will need to remove an additional screw, Fig 7-1 C). Top fill only pumps have a 3/8" SHCS drain plug that can be removed to empty the pump, Figure 7-1 B. It is strongly encouraged to drain the pump prior to removing cap. Bottom fill pumps can be drained by lifting check plug from bottom cap seat.

After the pump is emptied and bottom cap unfastened, lightly pull the cap away from the bottom housing. (Blank bottoms and flat screen bottom caps have three indents where screwdriver or tool can be used to assist bottom cap free from housing. Once the cap is pulled away, the hosing can be taken off by pull/twist away from pump head.



Figure 7-1 A:
Flat Bottom Intake



Figure 7-1 B:
Blank Bottom Cap



Figure 7-1 C:
Flat Bottom Intake

Float

Remove the clevis pin holding the Retainer. Use a 5/32” hex key to loosen the cap screw from the control rod guide. Use a 3/32” hex key to loosen the set screws from the lower and upper spring shaft collars. Remove springs and floats. When the float has been removed, care must be taken to not bend the control rod.

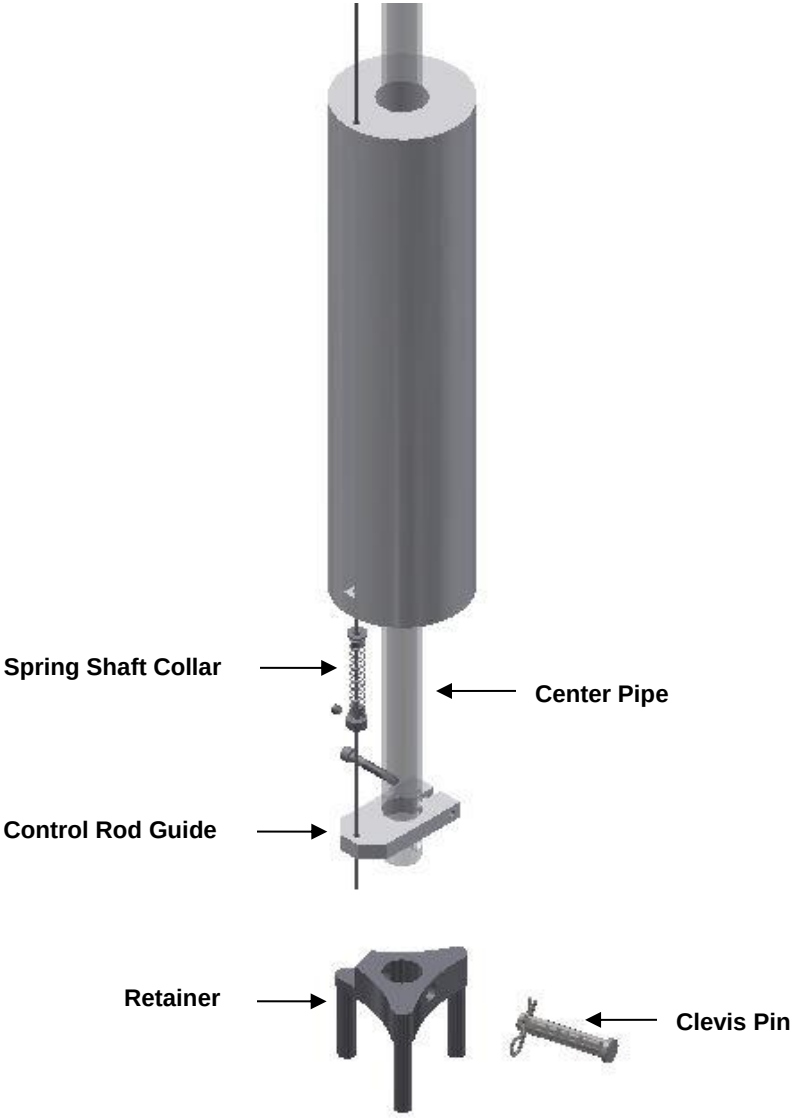

Figure 7-2

Control Rod/ Valve Assy.

Once everything has been removed from the control rod, it can simply be taken off using the path provided below (Figure 7-3). To reassemble control rod or replace, practice the same order in reverse. After the control rod has been removed, the valve assembly can be removed for inspection using a 9/64" hex key to remove the two bolts that attach to the pump head.

Step 1:

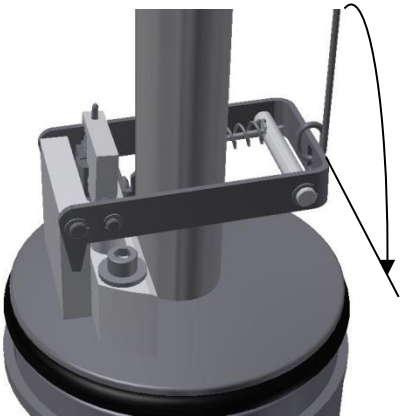

Step 2:

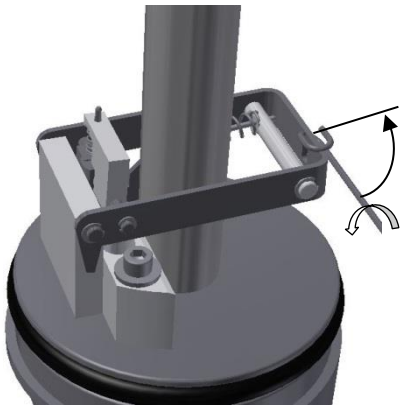

Step 3:



Step 4:

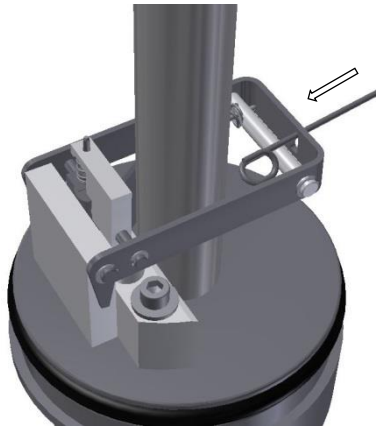

Figure 7-3

Section 8: System Troubleshooting

Problem: Pump does not discharge fluid to the surface.

Solution:

- Not enough air pressure is being supplied to the pump. – Ensure the air pressure is adequate for the pump depth. Minimum operating pressure-depth ratio: 0.50 psi/ft. is a good estimate to start with.
- The bottom and/or upper fluid intake screen is blocked. – Clear the screen(s) of all debris.
- The air, vent, and/or discharge hoses/tubing are kinked or blocked. – Clear the vent hose of all obstruction, replace if kinked.
- The center pipe, float and valve have sediment buildup causing “sticky” high friction spots. – Pull AR4 and perform a general maintenance cleaning.
- The fluid density being pumped is too light. – Geotech’s AR4 is rated for fluid densities as low as 0.70 SpG. If pumping fluid densities less than 0.70 SpG a custom float is required. Contact a Geotech Technical sales representative for more information.
- There is not enough fluid in well, or pump is not low enough to trigger the minimum activation levels. – Use a water level meter to determine fluid depths in wells and understand the AR4 System Schematics (section 7).
- Interference or damage to seat is preventing proper seal at the inlet check valves. Recovery fluid is exiting pump through inlets as opposed to discharge line. – Inspect all check valves for interference between the check “plug” and seat. Replace or refinish check seats if necessary.

Problem: Air in discharge line during cycle.

Solution:

- The pressure-depth ratio is too high. – Ensure air pressure is adequate for the pump depth (.50 psi per foot of depth). Having a high pressure-depth ratio will increase recovery time, but decrease air consumption efficiency.

Problem: Continuous air coming out of vent.

Solution:

- The control rod is damaged. – The control rod is the link that triggers the valve. A replacement is strongly recommended if any bends or signs of wear are present.
- O-rings are damaged in valve assembly. – Valve should shift smoothly. Inspect O-rings and check ball inside manifold to ensure no cracks, tears, or damage. Replace as needed.
- Springs in the valve assembly are not properly seated. – Visually inspect the springs. Clean anything that could be caught in the springs and make sure they are properly positioned.

If you are experiencing other problems than mentioned above,
please call Geotech Technical Support for immediate assistance, (800) 833-7958.

Deploying Multiple Pumps

When installing multiple pumps lines in series over long lengths, proper pipe sizing needs to considered to ensure pressure drop doesn't exceed the source. Please use the tables below as a reference only. Numbers provided were calculated for water flowing through plastic piping.

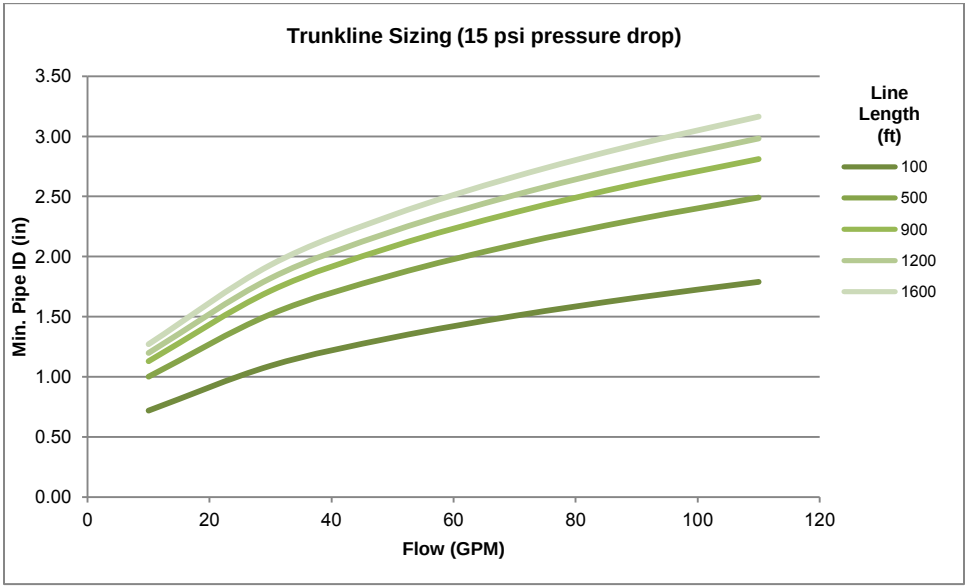

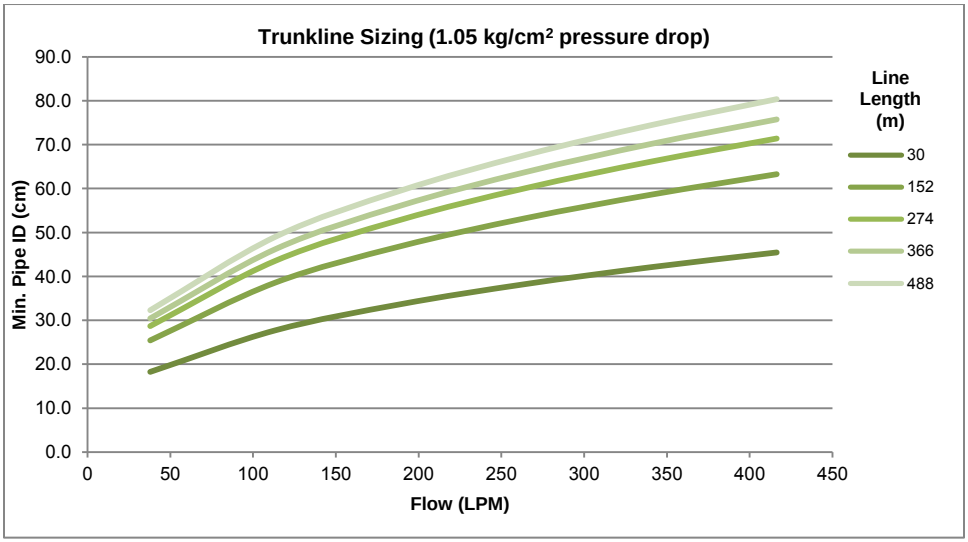

DOCUMENT REVISIONS		
EDCF#	DESCRIPTION	REV/DATE
-	Initial Release	11/8/13
-	Added trunkline sizing tables, SP	11/26/13

The Warranty

For a period of one (1) year from date of first sale, product is warranted to be free from defects in materials and workmanship. Geotech agrees to repair or replace, at Geotech's option, the portion proving defective, or at our option to refund the purchase price thereof. Geotech will have no warranty obligation if the product is subjected to abnormal operating conditions, accident, abuse, misuse, unauthorized modification, alteration, repair, or replacement of wear parts. User assumes all other risk, if any, including the risk of injury, loss, or damage, direct or consequential, arising out of the use, misuse, or inability to use this product. User agrees to use, maintain and install product in accordance with recommendations and instructions. User is responsible for transportation charges connected to the repair or replacement of product under this warranty.

Equipment Return Policy

A Return Material Authorization number (RMA #) is required prior to return of any equipment to our facilities, please call our 800 number for appropriate location. An RMA # will be issued upon receipt of your request to return equipment, which should include reasons for the return. Your return shipment to us must have this RMA # clearly marked on the outside of the package. Proof of date of purchase is required for processing of all warranty requests.

This policy applies to both equipment sales and repair orders.

FOR A RETURN MATERIAL AUTHORIZATION, PLEASE CALL OUR SERVICE DEPARTMENT AT 1-800-833-7958.

Model Number: _____

Serial Number: _____

Date of Purchase: _____

Equipment Decontamination

Prior to return, all equipment must be thoroughly cleaned and decontaminated. Please make note on RMA form, the use of equipment, contaminants equipment was exposed to, and decontamination solutions/methods used. Geotech reserves the right to refuse any equipment not properly decontaminated. Geotech may also choose to decontaminate the equipment for a fee, which will be applied to the repair order invoice.

Geotech Environmental Equipment, Inc.
2650 East 40th Avenue Denver, Colorado 80205
(303) 320-4764 ● **(800) 833-7958** ● FAX (303) 322-7242
email: sales@geotechenv.com website: www.geotechenv.com

Extraction Well

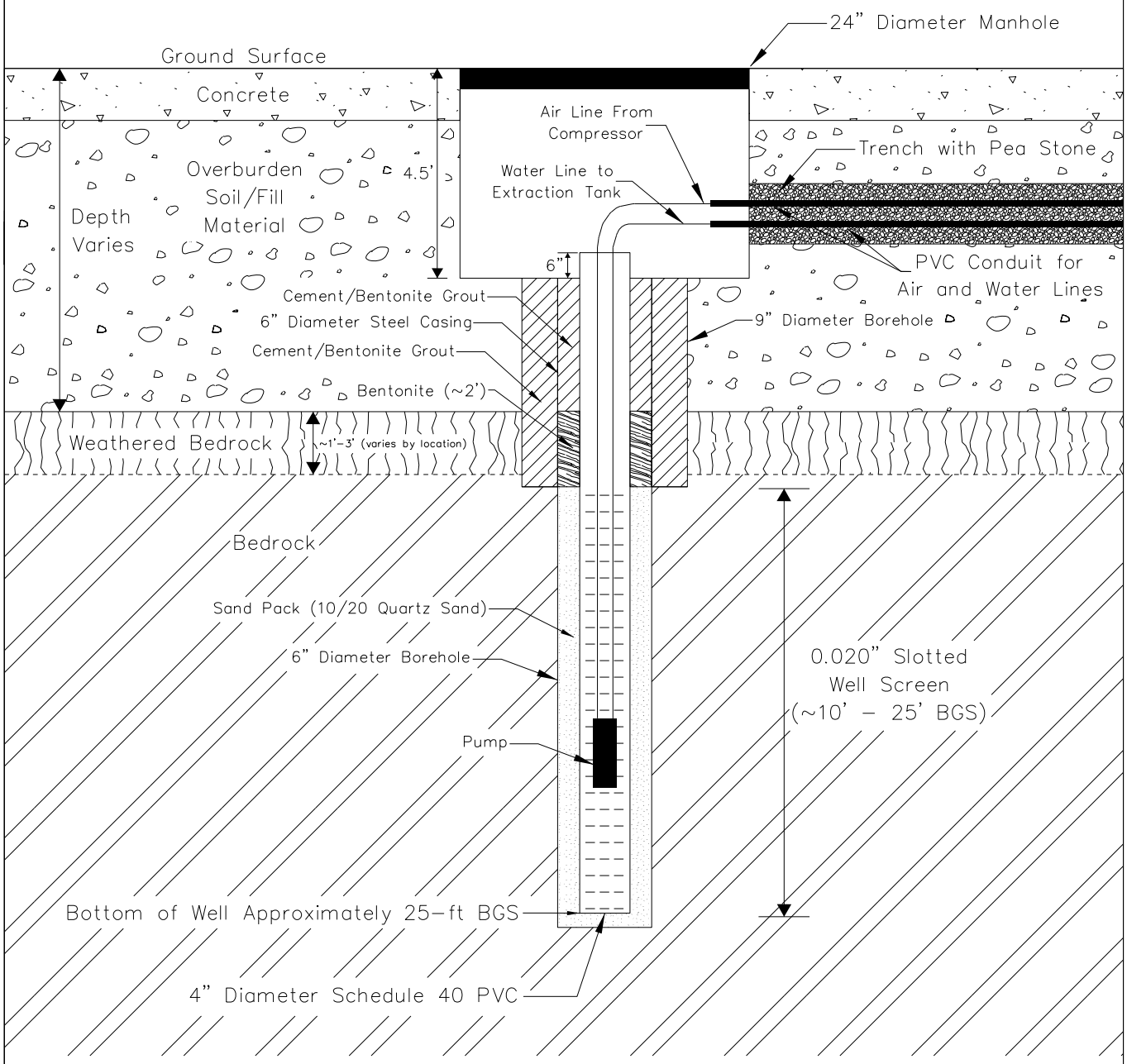

Notes:

(1) Figure is not to scale.

(2) Refer to Figure 8A for additional Extraction Well and Treatment System Details.

FIGURE 7A

PROJECT #: 209280

CLIENT: GENESEE VALLEY REAL ESTATE

DRAWN BY: IPJ

TYPICAL EXTRACTION WELL DESIGN DIAGRAM

REMEDIAL ACTION WORK PLAN: AOC #1
690 ST. PAUL STREET
ROCHESTER, NEW YORK

LABELLA Associates, P.C.
300 STATE STREET
ROCHESTER, NY 14614
P: (585) 454-6110
www.labellapc.com

I:\Genesee Valley Real Estate\209280\Drawings\RAWP - AOC #1\Well Details\EXTRACTION WELL DETAIL (IPJ 2015-02-11).dgn

Box 1 Non-Combination Enclosed Control and C600M Cover Control Kit Wiring

Contents

Description **Page**

General Information . . . 2
Cover Control Installation . . . 2
Starter/Contactor Wiring Diagrams . . . 3
C600M Kit Wiring Instructions . . . 4
Starter/Contactor Mounting Locations . . . 8
Enclosures without Starters or Contactors . . . 9
Reset Rod Kits . . . 9
Reset Rod Installation . . . 10



Powering Business Worldwide

Box 1 Non-Combination Enclosed Control and C600M Cover Control Kit Wiring

General Information

This publication is to be used for Eaton non-combination enclosures designed to accept the M22 series 22mm cover control devices.

If the enclosure catalog number already has cover control devices mounted, the existing reverse "c" shape bracket can be reused.

If the enclosure catalog number includes a blank rectangular cover, remove it prior to installing the cover control kit (see instructions below).

Cover Control Installation

1. Remove rectangular blank cover by pushing on the blank cover from the back side.
2. Discard blank cover .

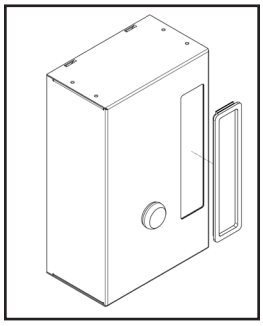

3. Using the included mounting screws, mount the C600M cover control to the base of the enclosure in the holes designated by the arrows below.
4. Terminate the wires from the M22 operators onto the starter/contactor as illustrated in "C600M Kit Wiring Instructions" (see page 5).

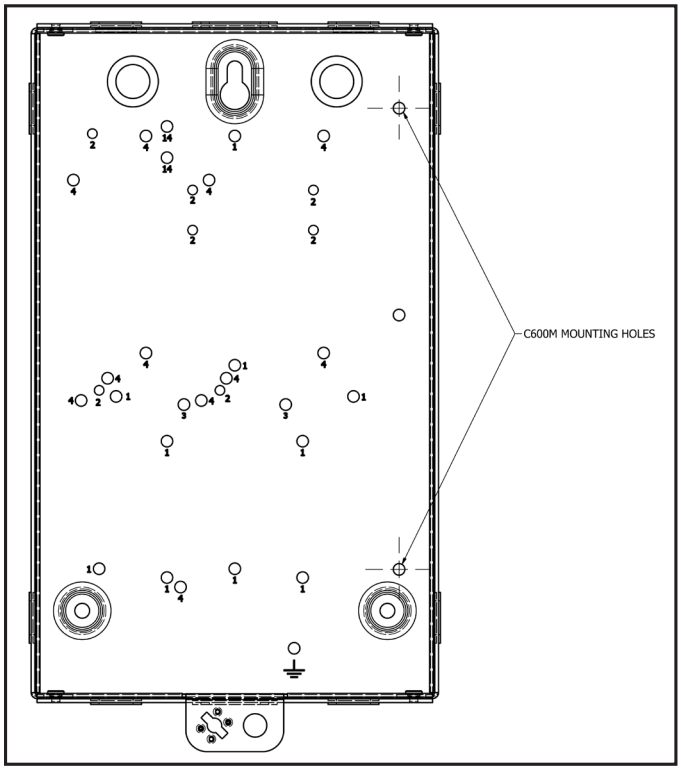

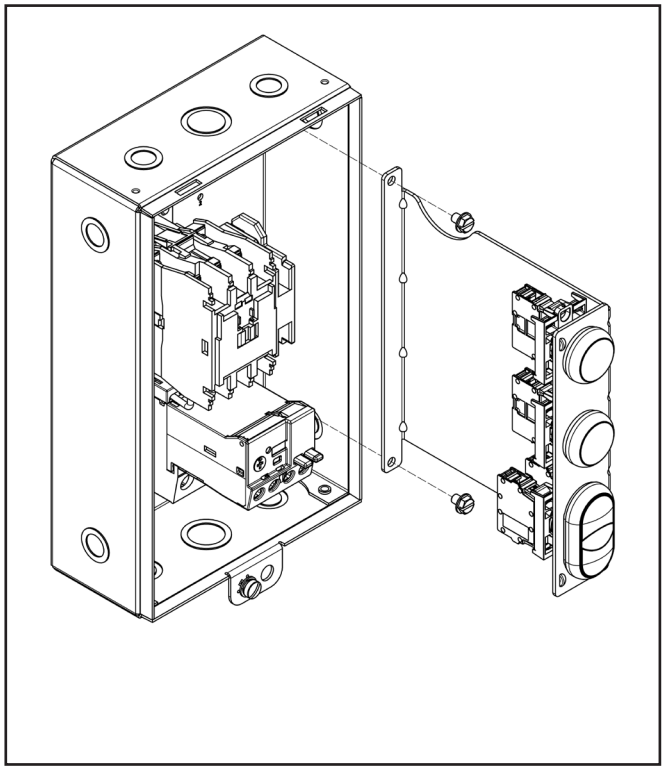

Wiring Diagrams: FVNR NEMA and IEC Starters and Contactors

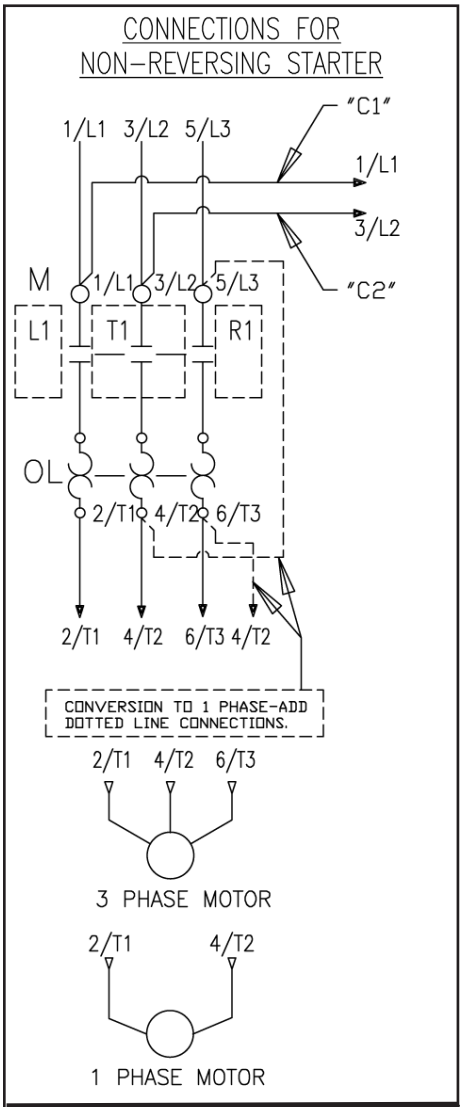

CAUTION

READ AND FOLLOW INSTRUCTIONS PRIOR TO WIRING OR CONNECTING POWER! THIS PRODUCT CAN BE FACTORY OR FIELD CONFIGURED FOR MULTIPLE CONTROL MODES OR CONTROL VOLTAGES. CHECK NAMEPLATE FOR COIL VOLTAGE.

SEPARATE CONTROL POWER

FOR COIL VOLTAGES 120V AND LESS: CONNECT SEPARATE CONTROL LINES TO THE NO. 61 TERMINAL ON THE TOP ADDER AUX. AND TO THE NO. 96 TERMINAL ON THE OVERLOAD RELAY.

FOR COIL VOLTAGES GREATER THAN 120V: REMOVE WIRE "C2" IF SUPPLIED. IF WIRE "C1" IS TERMINATED ON L1, DISCONNECT FROM L1. CONNECT SEPARATE CONTROL LINES TO THE "C1" WIRE OR APPROPRIATE PILOT DEVICE TERMINAL PER DIAGRAM AND TO THE NO. 96 TERMINAL ON THE OVERLOAD RELAY.

COMMON CONTROL POWER

FOR COIL VOLTAGES 120V AND LESS: ADD WIRE "C2" IF NOT SUPPLIED. ADD CONNECTOR BETWEEN L1 TERMINAL AND THE NO. 61 TERMINAL ON THE TOP ADDER AUX. OR APPROPRIATE PILOT DEVICE TERMINAL PER DIAGRAM.

FOR COIL VOLTAGES GREATER THAN 120V: ADD WIRE "C1" AND "C2" IF NOT SUPPLIED.

Wiring Diagrams: FVR NEMA and IEC Starters and Contactors

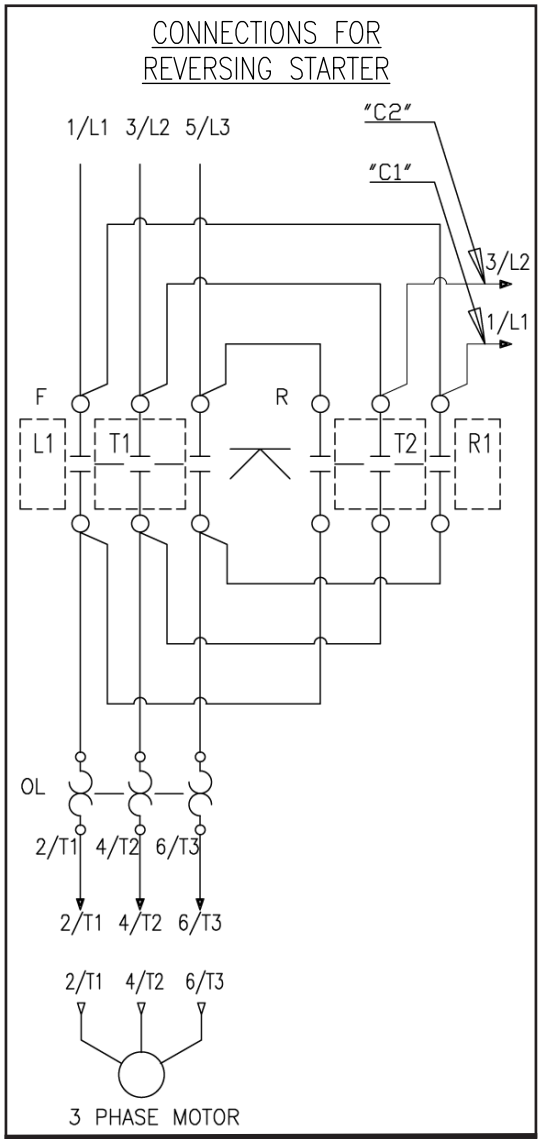

CAUTION

READ AND FOLLOW INSTRUCTIONS PRIOR TO WIRING OR CONNECTING POWER! THIS PRODUCT CAN BE FACTORY OR FIELD CONFIGURED FOR MULTIPLE CONTROL MODES OR CONTROL VOLTAGES. CHECK NAMEPLATE FOR COIL VOLTAGE.

SEPARATE CONTROL POWER

FOR COIL VOLTAGES 120V AND LESS: CONNECT SEPARATE CONTROL LINES TO THE NO. 63 OR NO. 61 TERMINAL PER DIAGRAM ON THE TOP ADDER AUX. AND TO THE NO. 96 TERMINAL ON THE OVERLOAD RELAY.

FOR COIL VOLTAGES GREATER THAN 120V: REMOVE WIRE "C2" IF SUPPLIED. IF WIRE "C1" IS TERMINATED ON L1, DISCONNECT FROM L1. CONNECT SEPARATE CONTROL LINES TO THE "C1" WIRE OR APPROPRIATE PILOT DEVICE TERMINAL PER DIAGRAM AND TO THE NO. 96 TERMINAL ON THE OVERLOAD RELAY.

COMMON CONTROL POWER

FOR COIL VOLTAGES 120V AND LESS: ADD WIRE "C2" IF NOT SUPPLIED. ADD CONNECTOR BETWEEN L1 TERMINAL AND THE NO. 61 OR NO. 63 TERMINAL PER DIAGRAM ON THE TOP ADDER AUX. OR APPROPRIATE PILOT DEVICE TERMINAL PER DIAGRAM.

FOR COIL VOLTAGES GREATER THAN 120V: ADD WIRE "C1" AND "C2" IF NOT SUPPLIED.

Wiring Diagrams: Lighting Electrically Held

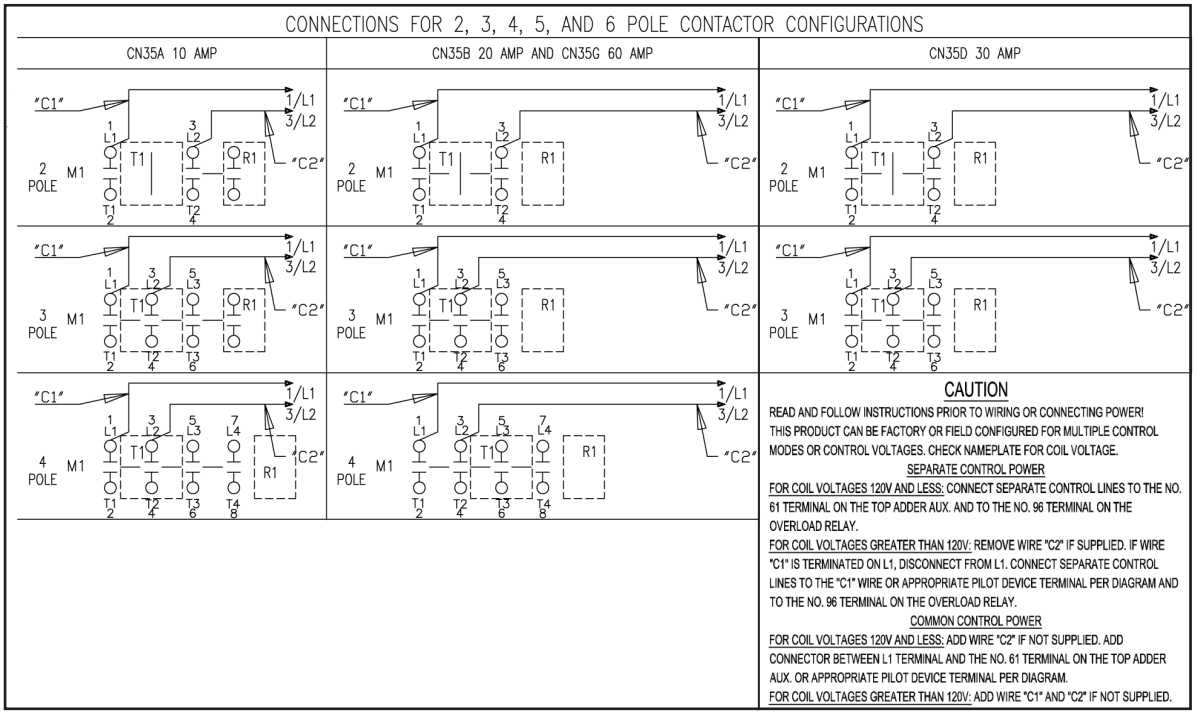

C600M Wiring Kit Diagrams

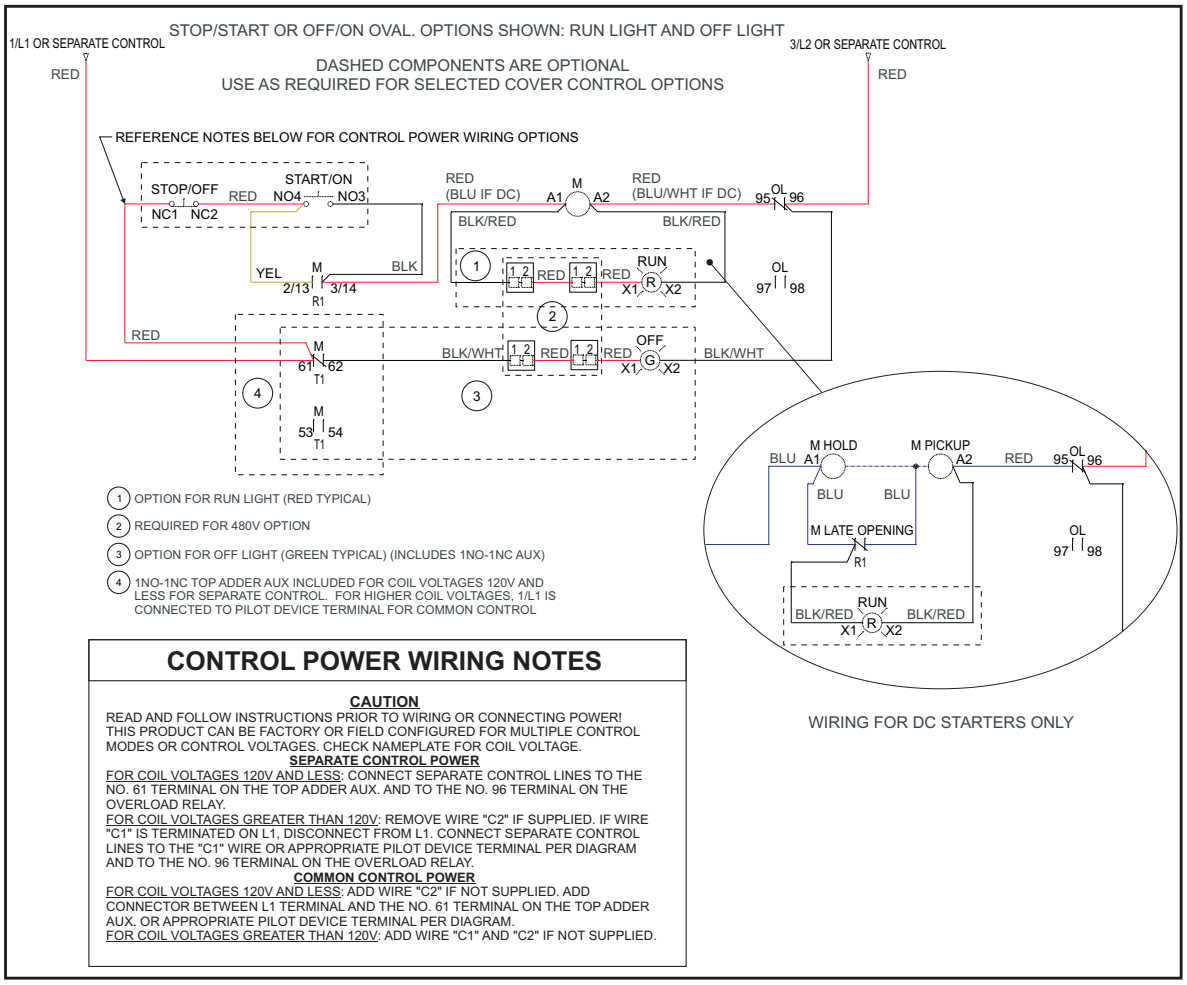

CONTROL POWER WIRING NOTES

CAUTION

READ AND FOLLOW INSTRUCTIONS PRIOR TO WIRING OR CONNECTING POWER! THIS PRODUCT CAN BE FACTORY OR FIELD CONFIGURED FOR MULTIPLE CONTROL MODES OR CONTROL VOLTAGES. CHECK NAMEPLATE FOR COIL VOLTAGE.

SEPARATE CONTROL POWER

FOR COIL VOLTAGES 120V AND LESS: CONNECT SEPARATE CONTROL LINES TO THE NO. 61 TERMINAL ON THE TOP ADDER AUX. AND TO THE NO. 96 TERMINAL ON THE OVERLOAD RELAY.

FOR COIL VOLTAGES GREATER THAN 120V: REMOVE WIRE "C2" IF SUPPLIED. IF WIRE "C1" IS TERMINATED ON L1, DISCONNECT FROM L1. CONNECT SEPARATE CONTROL LINES TO THE "C1" WIRE OR APPROPRIATE PILOT DEVICE TERMINAL PER DIAGRAM AND TO THE NO. 96 TERMINAL ON THE OVERLOAD RELAY.

COMMON CONTROL POWER

FOR COIL VOLTAGES 120V AND LESS: ADD WIRE "C2" IF NOT SUPPLIED. ADD CONNECTOR BETWEEN L1 TERMINAL AND THE NO. 61 TERMINAL ON THE TOP ADDER AUX. OR APPROPRIATE PILOT DEVICE TERMINAL PER DIAGRAM.

FOR COIL VOLTAGES GREATER THAN 120V: ADD WIRE "C1" AND "C2" IF NOT SUPPLIED.

Note: source drawing reference wiring diagram 286979.

Note: For kits with a green OFF light, an additional top added NC auxiliary is needed to be supplied by the customer.

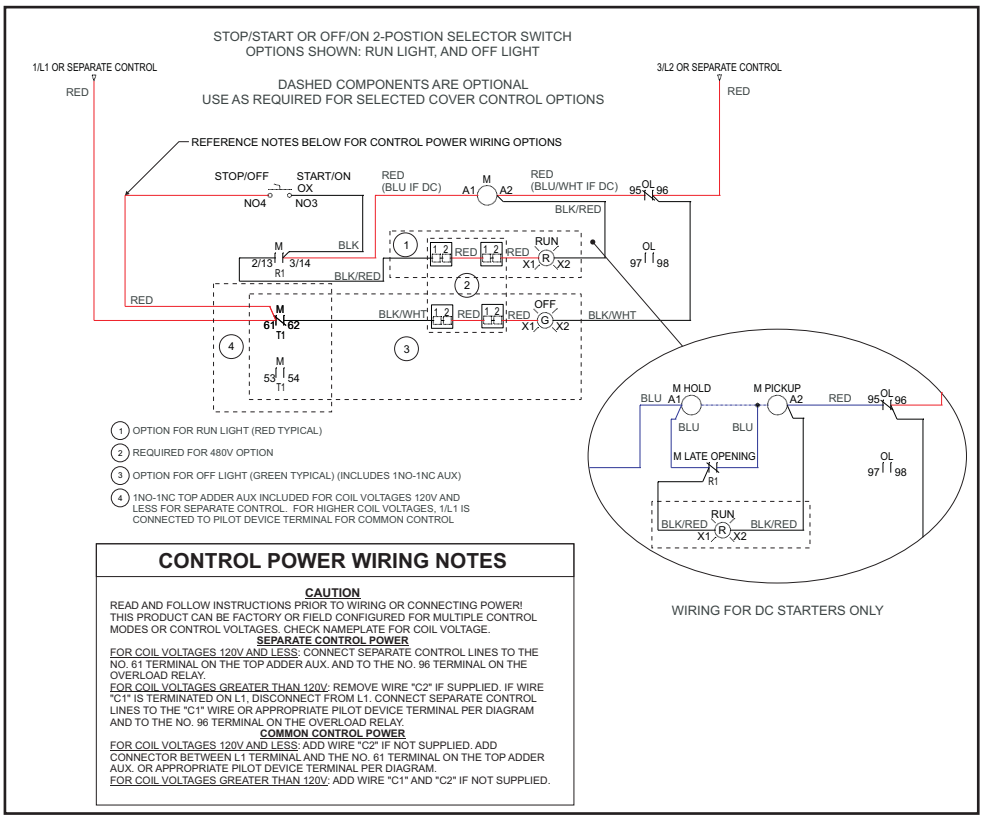

1 OPTION FOR RUN LIGHT (RED TYPICAL)
2 REQUIRED FOR 480V OPTION
3 OPTION FOR OFF LIGHT (GREEN TYPICAL) (INCLUDES 1NO-1NC AUX)
4 1NO-1NC TOP ADDER AUX INCLUDED FOR COIL VOLTAGES 120V AND LESS FOR SEPARATE CONTROL. FOR HIGHER COIL VOLTAGES, 1/L1 IS CONNECTED TO PILOT DEVICE TERMINAL FOR COMMON CONTROL

CONTROL POWER WIRING NOTES

CAUTION

READ AND FOLLOW INSTRUCTIONS PRIOR TO WIRING OR CONNECTING POWER! THIS PRODUCT CAN BE FACTORY OR FIELD CONFIGURED FOR MULTIPLE CONTROL MODES OR CONTROL VOLTAGES. CHECK NAMEPLATE FOR COIL VOLTAGE.

SEPARATE CONTROL POWER

FOR COIL VOLTAGES 120V AND LESS: CONNECT SEPARATE CONTROL LINES TO THE NO. 61 TERMINAL ON THE TOP ADDER AUX. AND TO THE NO. 96 TERMINAL ON THE OVERLOAD RELAY.

FOR COIL VOLTAGES GREATER THAN 120V: REMOVE WIRE "C2" IF SUPPLIED. IF WIRE "C1" IS TERMINATED ON L1, DISCONNECT FROM L1. CONNECT SEPARATE CONTROL LINES TO THE "C1" WIRE OR APPROPRIATE PILOT DEVICE TERMINAL PER DIAGRAM AND TO THE NO. 96 TERMINAL ON THE OVERLOAD RELAY.

COMMON CONTROL POWER

FOR COIL VOLTAGES 120V AND LESS: ADD WIRE "C2" IF NOT SUPPLIED. ADD CONNECTOR BETWEEN L1 TERMINAL AND THE NO. 61 TERMINAL ON THE TOP ADDER AUX. OR APPROPRIATE PILOT DEVICE TERMINAL PER DIAGRAM.

FOR COIL VOLTAGES GREATER THAN 120V: ADD WIRE "C1" AND "C2" IF NOT SUPPLIED.

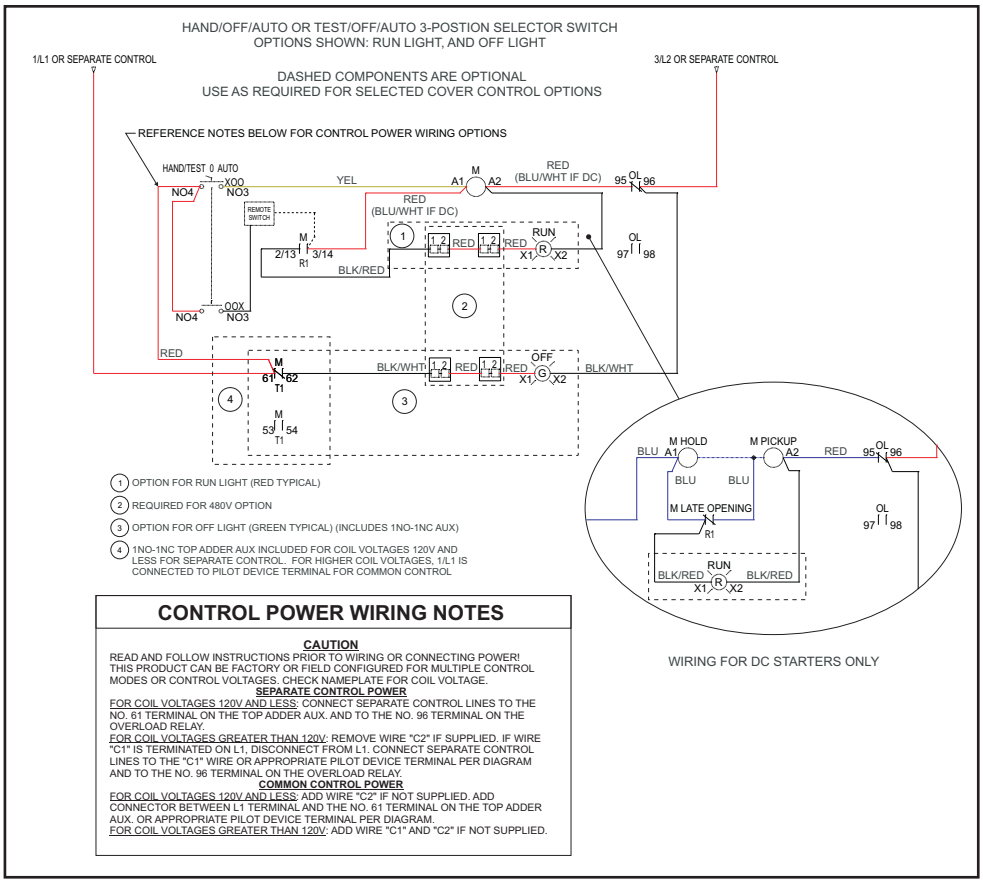

1 OPTION FOR RUN LIGHT (RED TYPICAL)
2 REQUIRED FOR 480V OPTION
3 OPTION FOR OFF LIGHT (GREEN TYPICAL) (INCLUDES 1NO-1NC AUX)
4 1NO-1NC TOP ADDER AUX INCLUDED FOR COIL VOLTAGES 120V AND LESS FOR SEPARATE CONTROL. FOR HIGHER COIL VOLTAGES, 1/L1 IS CONNECTED TO PILOT DEVICE TERMINAL FOR COMMON CONTROL

CONTROL POWER WIRING NOTES

CAUTION

READ AND FOLLOW INSTRUCTIONS PRIOR TO WIRING OR CONNECTING POWER! THIS PRODUCT CAN BE FACTORY OR FIELD CONFIGURED FOR MULTIPLE CONTROL MODES OR CONTROL VOLTAGES. CHECK NAMEPLATE FOR COIL VOLTAGE.

SEPARATE CONTROL POWER

FOR COIL VOLTAGES 120V AND LESS: CONNECT SEPARATE CONTROL LINES TO THE NO. 61 TERMINAL ON THE TOP ADDER AUX. AND TO THE NO. 96 TERMINAL ON THE OVERLOAD RELAY.

FOR COIL VOLTAGES GREATER THAN 120V: REMOVE WIRE "C2" IF SUPPLIED. IF WIRE "C1" IS TERMINATED ON L1, DISCONNECT FROM L1. CONNECT SEPARATE CONTROL LINES TO THE "C1" WIRE OR APPROPRIATE PILOT DEVICE TERMINAL PER DIAGRAM AND TO THE NO. 96 TERMINAL ON THE OVERLOAD RELAY.

COMMON CONTROL POWER

FOR COIL VOLTAGES 120V AND LESS: ADD WIRE "C2" IF NOT SUPPLIED. ADD CONNECTOR BETWEEN L1 TERMINAL AND THE NO. 61 TERMINAL ON THE TOP ADDER AUX. OR APPROPRIATE PILOT DEVICE TERMINAL PER DIAGRAM.

FOR COIL VOLTAGES GREATER THAN 120V: ADD WIRE "C1" AND "C2" IF NOT SUPPLIED.

Note: source drawing reference wiring diagram 286979.

Note: For kits with a green OFF light, an additional top added NC auxiliary is needed to be supplied by the customer.

Box 1 Non-Combination Enclosed Control and C600M Cover Control Kit Wiring

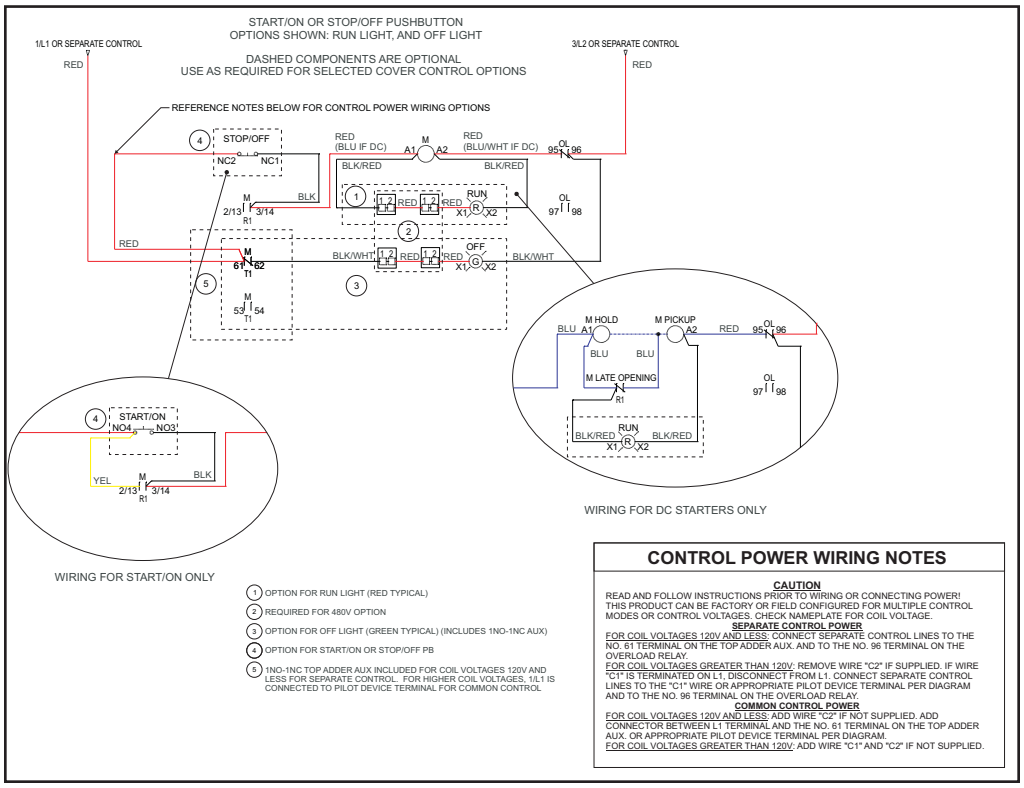

CONTROL POWER WIRING NOTES

CAUTION

READ AND FOLLOW INSTRUCTIONS PRIOR TO WIRING OR CONNECTING POWER! THIS PRODUCT CAN BE FACTORY OR FIELD CONFIGURED FOR MULTIPLE CONTROL MODES OR CONTROL VOLTAGES. CHECK NAMEPLATE FOR COIL VOLTAGE.

SEPARATE CONTROL POWER

FOR COIL VOLTAGES 120V AND LESS: CONNECT SEPARATE CONTROL LINES TO THE NO. 61 TERMINAL ON THE TOP ADDER AUX. AND TO THE NO. 96 TERMINAL ON THE OVERLOAD RELAY.
FOR COIL VOLTAGES GREATER THAN 120V: REMOVE WIRE "C2" IF SUPPLIED. IF WIRE "C1" IS TERMINATED ON L1, DISCONNECT FROM L1. CONNECT SEPARATE CONTROL LINES TO THE "C1" WIRE OR APPROPRIATE PILOT DEVICE TERMINAL PER DIAGRAM AND TO THE NO. 96 TERMINAL ON THE OVERLOAD RELAY.

COMMON CONTROL POWER

FOR COIL VOLTAGES 120V AND LESS: ADD WIRE "C2" IF NOT SUPPLIED. ADD CONNECTOR BETWEEN L1 TERMINAL AND THE NO. 61 TERMINAL ON THE TOP ADDER AUX. OR APPROPRIATE PILOT DEVICE TERMINAL PER DIAGRAM.
FOR COIL VOLTAGES GREATER THAN 120V: ADD WIRE "C1" AND "C2" IF NOT SUPPLIED.

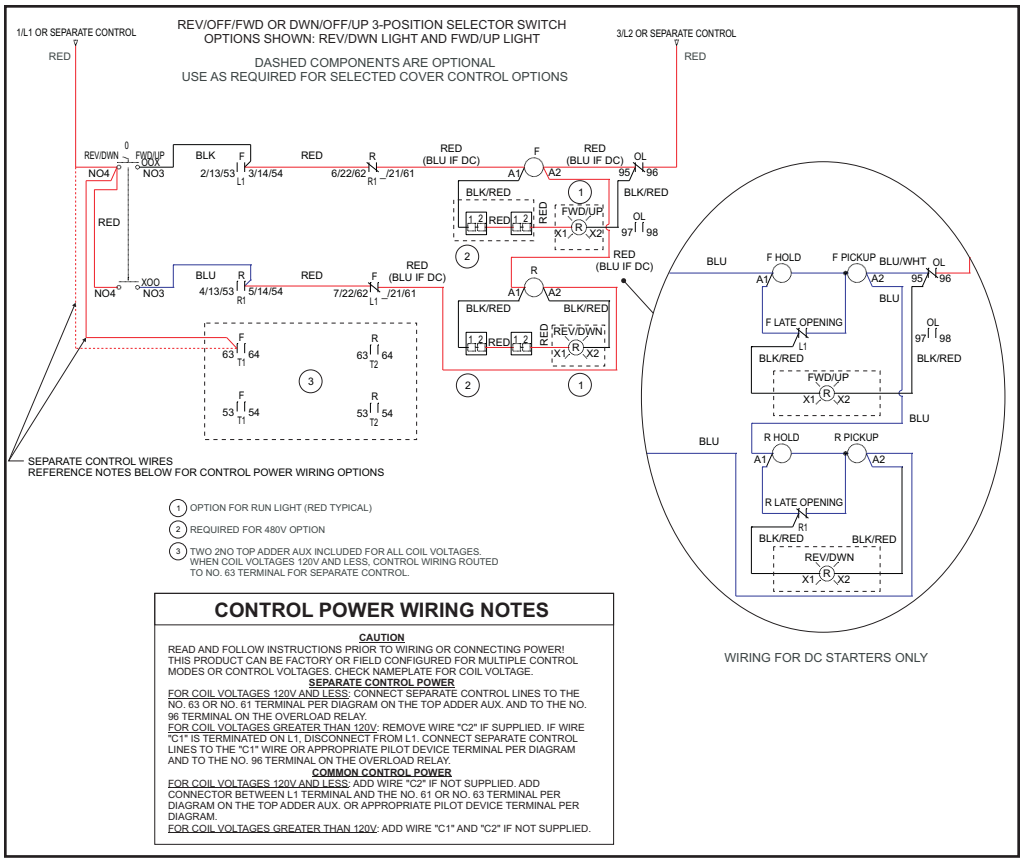

CONTROL POWER WIRING NOTES

CAUTION

READ AND FOLLOW INSTRUCTIONS PRIOR TO WIRING OR CONNECTING POWER! THIS PRODUCT CAN BE FACTORY OR FIELD CONFIGURED FOR MULTIPLE CONTROL MODES OR CONTROL VOLTAGES. CHECK NAMEPLATE FOR COIL VOLTAGE.

SEPARATE CONTROL POWER

FOR COIL VOLTAGES 120V AND LESS: CONNECT SEPARATE CONTROL LINES TO THE NO. 63 OR NO. 61 TERMINAL PER DIAGRAM ON THE TOP ADDER AUX. AND TO THE NO. 96 TERMINAL ON THE OVERLOAD RELAY.
FOR COIL VOLTAGES GREATER THAN 120V: REMOVE WIRE "C2" IF SUPPLIED. IF WIRE "C1" IS TERMINATED ON L1, DISCONNECT FROM L1. CONNECT SEPARATE CONTROL LINES TO THE "C1" WIRE OR APPROPRIATE PILOT DEVICE TERMINAL PER DIAGRAM AND TO THE NO. 96 TERMINAL ON THE OVERLOAD RELAY.

COMMON CONTROL POWER

FOR COIL VOLTAGES 120V AND LESS: ADD WIRE "C2" IF NOT SUPPLIED. ADD CONNECTOR BETWEEN L1 TERMINAL AND THE NO. 61 OR NO. 63 TERMINAL PER DIAGRAM ON THE TOP ADDER AUX. OR APPROPRIATE PILOT DEVICE TERMINAL PER DIAGRAM.
FOR COIL VOLTAGES GREATER THAN 120V: ADD WIRE "C1" AND "C2" IF NOT SUPPLIED.

Note: source drawing reference wiring diagram 286979.

Note: For kits with a green OFF light, an additional top added NC auxiliary is needed to be supplied by the customer.

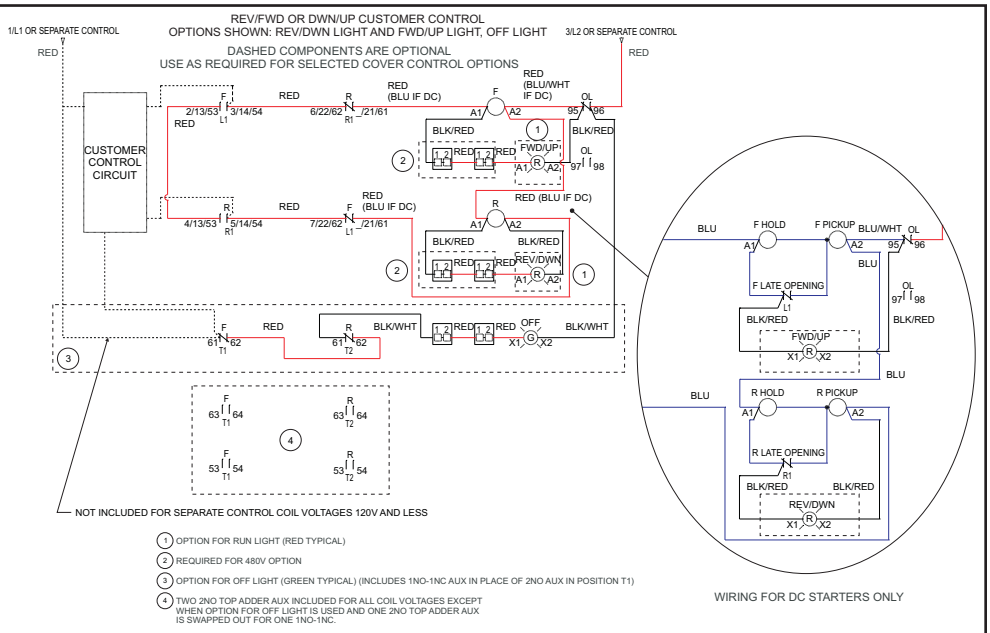

CONTROL POWER WIRING NOTES

CAUTION

READ AND FOLLOW INSTRUCTIONS PRIOR TO WIRING OR CONNECTING POWER! THIS PRODUCT CAN BE FACTORY OR FIELD CONFIGURED FOR MULTIPLE CONTROL MODES OR CONTROL VOLTAGES. CHECK NAMEPLATE FOR COIL VOLTAGE.

SEPARATE CONTROL POWER

FOR COIL VOLTAGES 120V AND LESS: CONNECT SEPARATE CONTROL LINES TO THE NO. 63 OR NO. 61 TERMINAL PER DIAGRAM ON THE TOP ADDER AUX. AND TO THE NO. 96 TERMINAL ON THE OVERLOAD RELAY.

FOR COIL VOLTAGES GREATER THAN 120V: REMOVE WIRE "C2" IF SUPPLIED. IF WIRE "C1" IS TERMINATED ON L1, DISCONNECT FROM L1. CONNECT SEPARATE CONTROL LINES TO THE "C1" WIRE OR APPROPRIATE PILOT DEVICE TERMINAL PER DIAGRAM AND TO THE NO. 96 TERMINAL ON THE OVERLOAD RELAY.

COMMON CONTROL POWER

FOR COIL VOLTAGES 120V AND LESS: ADD WIRE "C2" IF NOT SUPPLIED. ADD CONNECTOR BETWEEN L1 TERMINAL AND THE NO. 61 OR NO. 63 TERMINAL PER DIAGRAM ON THE TOP ADDER AUX. OR APPROPRIATE PILOT DEVICE TERMINAL PER DIAGRAM.

FOR COIL VOLTAGES GREATER THAN 120V: ADD WIRE "C1" AND "C2" IF NOT SUPPLIED.

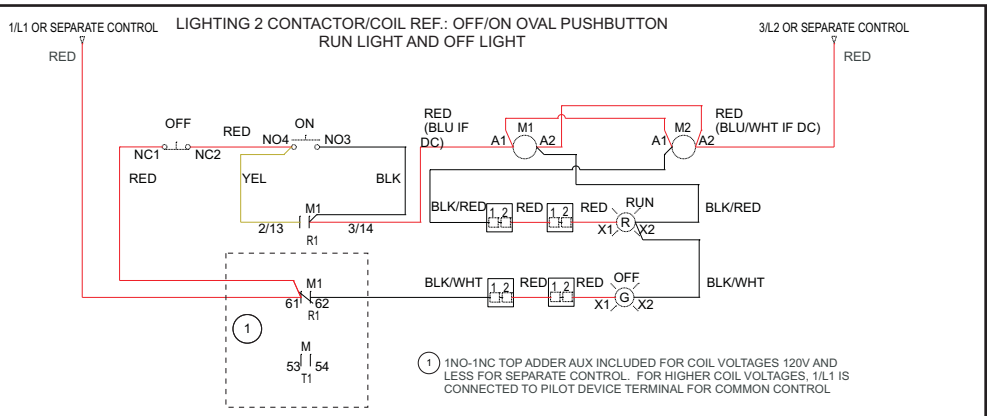

CONTROL POWER WIRING NOTES

CAUTION

READ AND FOLLOW INSTRUCTIONS PRIOR TO WIRING OR CONNECTING POWER! THIS PRODUCT CAN BE FACTORY OR FIELD CONFIGURED FOR MULTIPLE CONTROL MODES OR CONTROL VOLTAGES. CHECK NAMEPLATE FOR COIL VOLTAGE.

SEPARATE CONTROL POWER

FOR COIL VOLTAGES 120V AND LESS: CONNECT SEPARATE CONTROL LINES TO THE NO. 61 TERMINAL ON THE TOP ADDER AUX. AND TO THE NO. 96 TERMINAL ON THE OVERLOAD RELAY.

FOR COIL VOLTAGES GREATER THAN 120V: REMOVE WIRE "C2" IF SUPPLIED. IF WIRE "C1" IS TERMINATED ON L1, DISCONNECT FROM L1. CONNECT SEPARATE CONTROL LINES TO THE "C1" WIRE OR APPROPRIATE PILOT DEVICE TERMINAL PER DIAGRAM AND TO THE NO. 96 TERMINAL ON THE OVERLOAD RELAY.

COMMON CONTROL POWER

FOR COIL VOLTAGES 120V AND LESS: ADD WIRE "C2" IF NOT SUPPLIED. ADD CONNECTOR BETWEEN L1 TERMINAL AND THE NO. 61 TERMINAL ON THE TOP ADDER AUX. OR APPROPRIATE PILOT DEVICE TERMINAL PER DIAGRAM.

FOR COIL VOLTAGES GREATER THAN 120V: ADD WIRE "C1" AND "C2" IF NOT SUPPLIED.

Note: source drawing reference wiring diagram 286979.

Note: For kits with a green OFF light, an additional top added NC auxiliary is needed to be supplied by the customer.

Starter/Contactor Mounting Locations

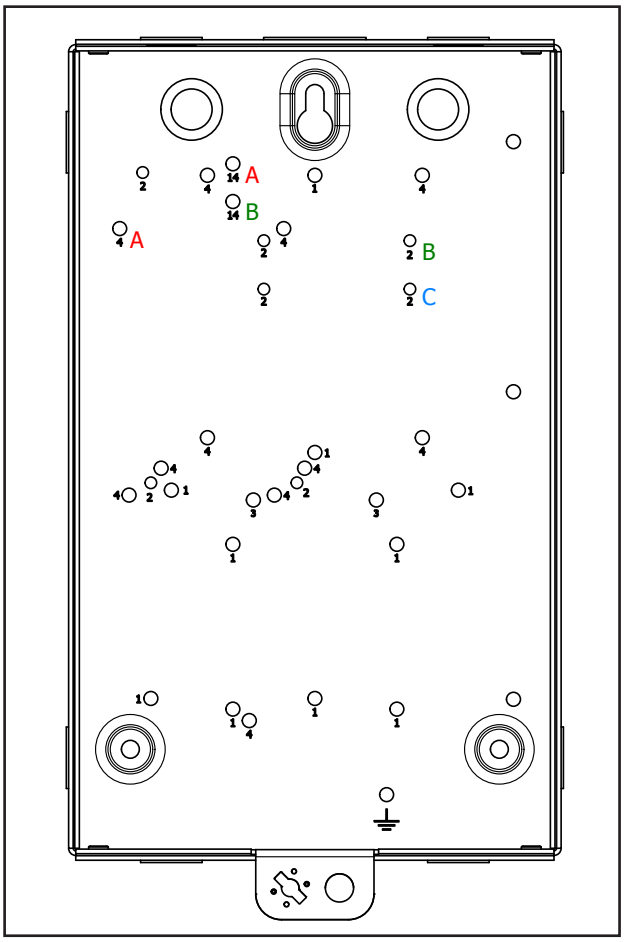

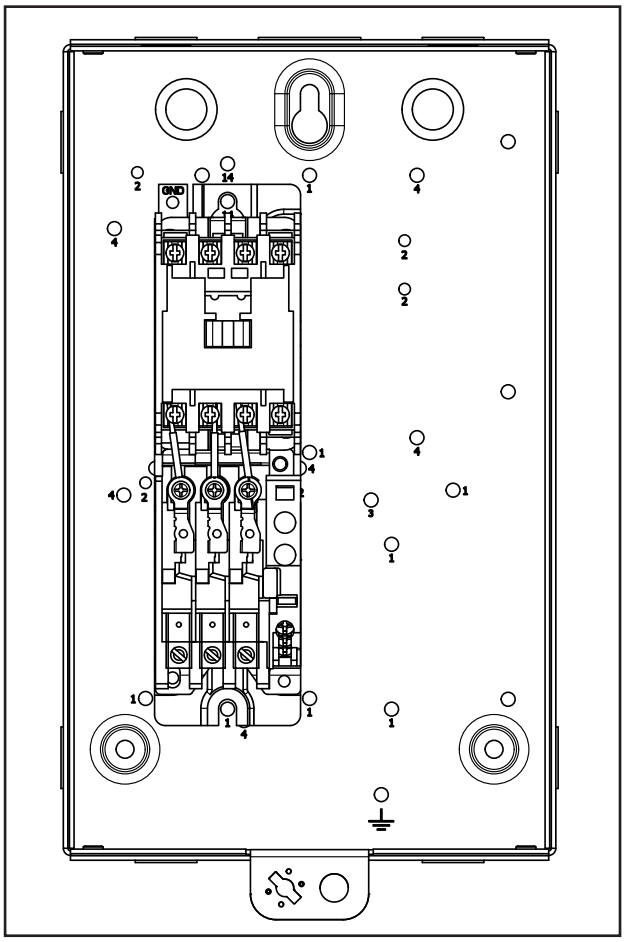

Example: If you want to mount a AN16AN, you would put the top hole in the 14B location.

NEMA	Size	Top Location
AN16AN	00	14B
AN19AN	00	14B
AN16BN	0	14B
AN19BN	0	14B
AN16DN	1	14A
AN19DN	1	14A
AN19GN	2	14A
All Other	00-2	1

XT	Top Location
Size B	2C
Size C	2B

Lighting	Top Location
All Contactors	1

DP	Top Location
A25/B25	14A
A27/B27	4A

Note: All indicated mounting holes represent contactor or starter top or top left mounting location. Additional screws are required for full contactor or starter assembly.

Note: Cover control bracket mounting holes are on the far right of the base.

Note: Letters are not stamped in the box.

Enclosures without Starters or Contactors

Rod Shaft Length	Catalog Number	Starter Type	Description
None	C899B001	N/A	Empty Box 1 Enclosure without reset (includes blank cover on reset hole)
0.43	C899B043	ECN SSOL Size 00/0/1/2	Empty Box 1 Enclosure with 0.43 inch reset rod length
0.93	C899B093	ECX SSOL Size B ECX SSOL Size C	Empty Box 1 Enclosure with 0.93 inch reset rod length
1.30	C899B130	ECX Fixed Overload Size C A27/B27 Fixed Overload	Empty Box 1 Enclosure with 1.30 inch reset rod length
1.37	C899B137	A27/B27_XTOB_40, 45 A	Empty Box 1 Enclosure with 1.37 inch reset rod length
1.56	C899B156	A27/B27 Fixed Overload	Empty Box 1 Enclosure with 1.56 inch reset rod length
1.68	C899B168	ECN_C306 Size 00/0/1 A25/B25 C306	Empty Box 1 Enclosure with 1.68 inch reset rod length
1.74	C899B174	ECX Fixed Overload Size B	Empty Box 1 Enclosure with 1.74 inch reset rod length

Reset Rod Lengths

Rod Shaft Length	Starter Type
0.43 to 1.74	For all starter types below
0.43	ECN SSOL Size 00/0/1/2
0.74	ECX SSOL Size B ECX SSOL Size C
1.30	ECX Fixed Overload Size C A27/B27 Fixed Overload
1.37	A27/B27_XTOB_40,45 A
1.56	A27/B27_XTOB_15, 25, 30 A
1.68	ECN_C306 Size 00/0/1 A25/B25 C306
1.74	ECX Fixed Overload Size B

Box 1 Non-Combination Enclosed Control and C600M Cover Control Kit Wiring

Reset Rod Installation

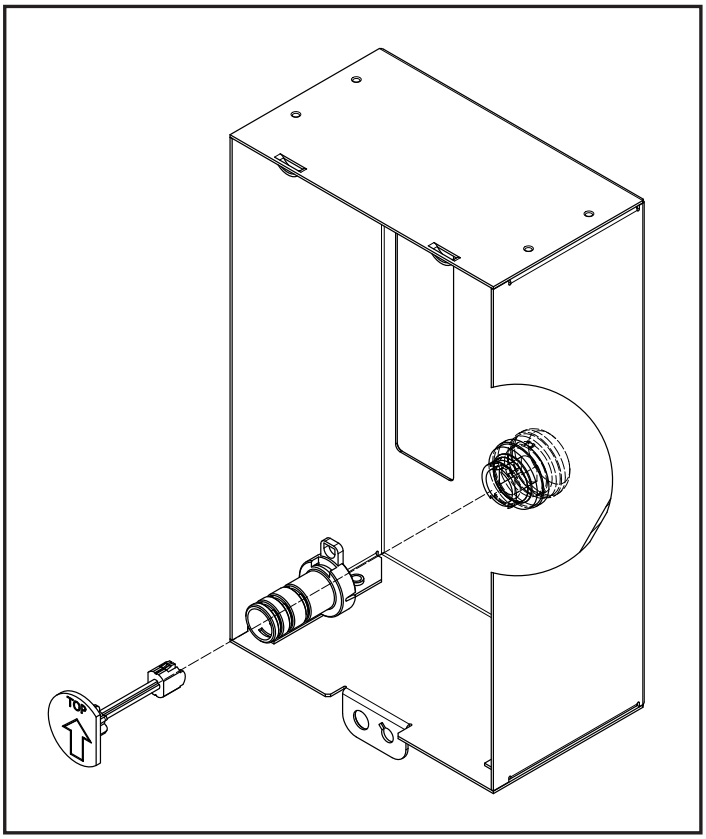

1. From the top of the box cover, insert the M22 button into the box cover.
2. From the bottom of the cover, tighten the nut onto M22 button.
3. From the bottom of the cover, snap the shroud (if supplied) cut to the appropriate length for the reset rod into the M22 button.
4. If the reset paddle is not already assembled to the required reset rod (see Reset Rod Kit table), assemble as shown by inserting reset rod into reset paddle.
5. From the bottom of the cover, snap the required reset rod into M22 button. The flat side of the paddle should face away from the box cover's rectangular opening with the "Up" arrow facing toward the top of the box.

Eaton
1000 Eaton Boulevard
Cleveland, OH 44122
United States
Eaton.com

© 2014 Eaton
All Rights Reserved
Publication No. P52899 / 002
May 2015

Eaton is a registered trademark.

All other trademarks are property of their respective owners.

Powering Business Worldwide

LABELLA Associates, D.P.C. | Engineering Architecture Environmental Planning

APPENDIX B

SSDS MONITORING FORM

LABELLA Associates, D.P.C.

300 STATE STREET, SUITE 201
ROCHESTER, NEW YORK 14614
PHONE: (585) 454-6110
FAX: (585-454-3066

SUB SLAB DEPRESSURIZATION SYSTEM INSPECTION FORM

PROJECT NAME: NYSDEC BCP SITE NO. C828159
LOCTION: 690 ST. PAUL STREET, ROCHESTER, NEW YORK
PROJECT NO.: 209280
INSPECTED BY:
DATE:
WEATHER:

INSPECTION EVENT		COMPONENT	BUILDING 14B				COMMENTS
QUARTERLY	ANNUALLY		SSDS FAN #1	SSDS FAN #2	SSDS FAN #3	SSDS FAN #4	
		OPERATIONAL	YES / NO	YES / NO	YES / NO	YES / NO	
		VACUUM GAUGE READING (IN. H20)					
		OPEN BALL VALVE ON TRAP/DRAIN WATER	YES / NO	YES / NO	YES / NO	YES / NO	
		ALARM CHECK	YES / NO	YES / NO	YES / NO	YES / NO	
		SSDS PIPING CHECK	YES / NO	YES / NO	YES / NO	YES / NO	
		SSDS FAN CHECK	YES / NO	YES / NO	YES / NO	YES / NO	
		CONDENSATE WATER CHECK	YES / NO	YES / NO	YES / NO	YES / NO	
		INDOOR AIR SAMPLES COLLECTED	YES / NO				

LABELLA Associates, D.P.C. | Engineering Architecture Environmental Planning

SUB-SLAB DEPRESSURIZATION SYSTEM AND GPTS VENT FAN MONTHLY INSPECTION FORM

PROJECT NAME: NYSDEC BCP SITE NO. C828159
LOCATION: 690 ST. PAUL STREET, ROCHESTER, NEW YORK
LABELLA PROJECT # 209280
LABELLA REP:
DATE:
WEATHER:

LOCTION	OPERATIONAL	VACUUM READING (INCHES OF WATER)	ALARM WORKING
SSDS FAN #1 (WEST)	YES / NO		YES / NO
SSDS FAN #2 (EAST)	YES / NO		YES / NO
SSDS FAN #3	YES / NO		YES / NO
SSDS FAN #4	YES / NO		YES / NO
GPTS ROOM VENT FAN	YES / NO		YES / NO

NOTES:
GPTS = GROUNDWATER PUMP AND TREATMENT SYSTEM

Bulletin A-27

Magnehelic® Differential Pressure Gage

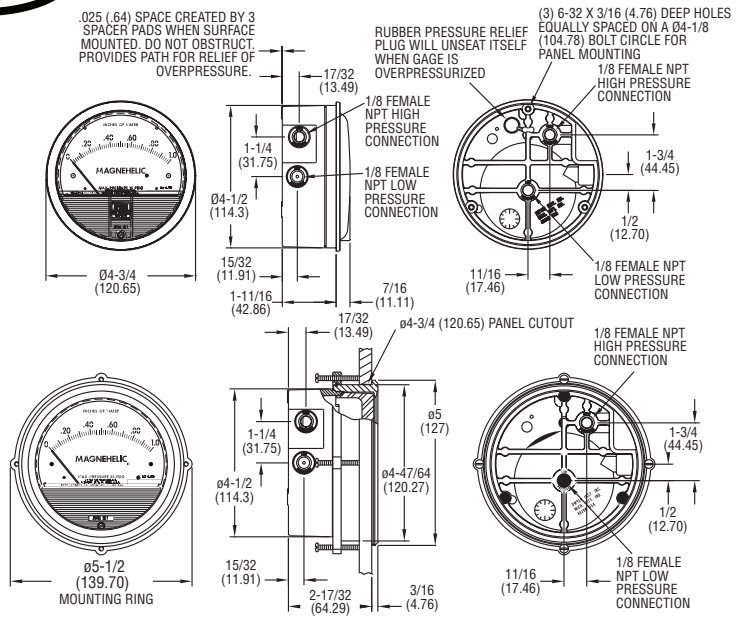

**The blowout plug is not used on models above 180 inches of water pressure, medium or high pressure models, or on gages which require an elastomer other than silicone for the diaphragm.*

STANDARD GAGE ACCESSORIES: Two 1/8″ NPT plugs for duplicate pressure taps, two 1/8″ pipe thread to rubber tubing adapters and three flush mounting adapters with screws.

MP AND HP GAGE ACCESSORIES: Mounting ring and snap ring retainer substituted for 3 adaptors, 1/4" compression fittings replace 1/8" pipe thread to rubber tubing adaptors.

OVERPRESSURE PROTECTION: Standard Magnehelic® Differential Pressure Gages are rated for a maximum pressure of 15 psig and should not be used where that limit could be exceeded. Models employ a rubber plug on the rear which functions as a relief valve by unseating and venting the gage interior when over pressure reaches approximately 25 psig (excludes MP and HP models). To provide a free path for pressure relief, there are four spacer pads which maintain .023″ clearance when gage is surface mounted. Do not obstruct the gap created by these pads.

SPECIFICATIONS

Service: Air and non-combustible, compatible gases. (Natural Gas option available.)
Wetted Materials: Consult factory.
Housing: Die cast aluminum case and bezel, with acrylic cover. (MP model has polycarbonate cover).
Accuracy: ±2% of full scale (±3% on - 0, -100 Pa, -125 Pa, 10MM and ±4% on -00, - 00N, -60 Pa, -6MM ranges), throughout range at 70°F (21.1°C).
Pressure Limits: -20″ Hg to 15 psig.† (-0.677 bar to 1.034 bar); MP option: 35 psig (2.41 bar), HP option: 80 psig (5.52 bar).
Overpressure: Relief plug opens at approximately 25 psig (1.72 bar), standard gages only. The blowout plug is not used on models above 180 inches of water pressure, medium or high pressure models, or on gages which require an elastomer other than silicone for the diaphragm.
Temperature Limits: 20 to 140°F (-6.67 to 60°C). *Low temperature models available as special option.
Size: 4″ (101.6 mm) diameter dial face.
Mounting Orientation: Diaphragm in vertical position. Consult factory for other position orientations.
Process Connections: 1/8″ female NPT duplicate high and low pressure taps - one pair side and one pair back.
Weight: 1 lb 2 oz (510 g), MP & HP 2 lb 2 oz (963 g).
Agency Approvals: RoHS.

†For applications with high cycle rate within gage total pressure rating, next higher rating is recommended. See Medium and High pressure options.

Note: May be used with hydrogen when ordering Buna-N diaphragm. Pressure must be less than 35 psi.

INSTALLATION

Select a location free from excessive vibration and where the ambient temperature will not exceed 140°F (60°C). Also, avoid direct sunlight which accelerates discoloration of the clear plastic cover. Sensing lines may be run any necessary distance. Long tubing lengths will not affect accuracy but will increase response time slightly. Do not restrict lines. If pulsating pressures or vibration cause excessive pointer oscillation, consult the factory for ways to provide additional damping.
All standard Magnehelic® Differential Pressure Gages are calibrated with the diaphragm vertical and should be used in that position for maximum accuracy. If gages are to be used in other than vertical position, this should be specified on the order. Many higher range gages will perform within tolerance in other positions with only rezeroing. Low range models of 0.5" w.c. plus 0.25" w.c. and metric equivalents must be used in the vertical position only.

SURFACE MOUNTING

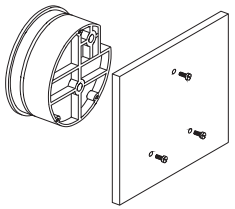

Locate mounting holes, 120° apart on a 4-1/8" dia. circle. Use No. 6-32 machine screws of appropriate length.

FLUSH MOUNTING

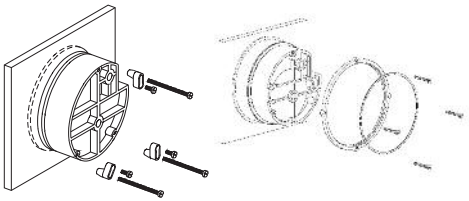

Provide a 4-9/16" dia. (116 mm) opening in panel. Provide a 4-3/4" dia. (120 mm) opening for MP and HP models. Insert gage and secure in place with No. 6-32 machine screws of appropriate length, with adapters, firmly secured in place.

PIPE MOUNTING

To mount gage on 1-1/4" - 2" pipe, order optional A-610 pipe mounting kit.

TO ZERO GAGE AFTER INSTALLATION

Set the indicating pointer exactly on the zero mark, using the external zero adjust screw on the cover at the bottom. Note that the zero check or adjustment can only be made with the high and low pressure taps both open to atmosphere.

OPERATION

Positive Pressure: Connect tubing from source of pressure to either of the two high pressure ports. Plug the port not used. Vent one or both low pressure ports to atmosphere.
Negative Pressure: Connect tubing from source of vacuum or negative pressure to either of the two low pressure ports. Plug the port not used. Vent one or both high pressure ports to atmosphere.
Differential Pressure: Connect tubing from the greater of two pressure sources to either high pressure port and the lower to either low pressure port. Plug both unused ports.
When one side of the gage is vented in dirty, dusty atmosphere, we suggest an A-331 Filter Vent Plug be installed in the open port to keep inside of gage clean.

A. For portable use of temporary installation use 1/8" pipe thread to rubber tubing adapter and connect to source of pressure with flexible rubber or vinyl tubing.
B. For permanent installation, 1/4" O.D., or larger, copper or aluminum tubing is recommended.

MAINTENANCE

No lubrication or periodic servicing is required. Keep case exterior and cover clean. Occasionally disconnect pressure lines to vent both sides of gage to atmosphere and re-zero. Optional vent valves should be used in permanent installations. The Series 2000 is not field serviceable and should be returned if repair is needed (field repair should not be attempted and may void warranty). Be sure to include a brief description of the problem plus any relevant application notes. Contact customer service to receive a return goods authorization number before shipping.

WARNING

Attempted field repair may void your warranty. Recalibration or repair by the user is not recommended.

TROUBLE SHOOTING TIPS

Gage won't indicate or is sluggish.

1. Duplicate pressure port not plugged.
2. Diaphragm ruptured due to overpressure.
3. Fittings or sensing lines blocked, pinched, or leaking.
4. Cover loose or "O"ring damaged, missing.
5. Pressure sensor, (static tips, Pitot tube, etc.) improperly located.
6. Ambient temperature too low. For operation below 20°F (-7°C), order gage with low temperature, (LT) option.

DWYER INSTRUMENTS, INC.
P.O. BOX 373 • MICHIGAN CITY, INDIANA 46360 U.S.A.
Phone: 219/879-8000 Fax: 219/872-9057
www.dwyer-inst.com e-mail: info@dwyer-inst.com

DWYER INSTRUMENTS, INC.
P.O. BOX 373 • MICHIGAN CITY, INDIANA 46360 U.S.A.
Phone: 219/879-8000 Fax: 219/872-9057
www.dwyer-inst.com e-mail: info@dwyer-inst.com

Series 2000

Magnehelic® Differential Pressure Gages

Indicate Positive, Negative or Differential, Accurate within 2%



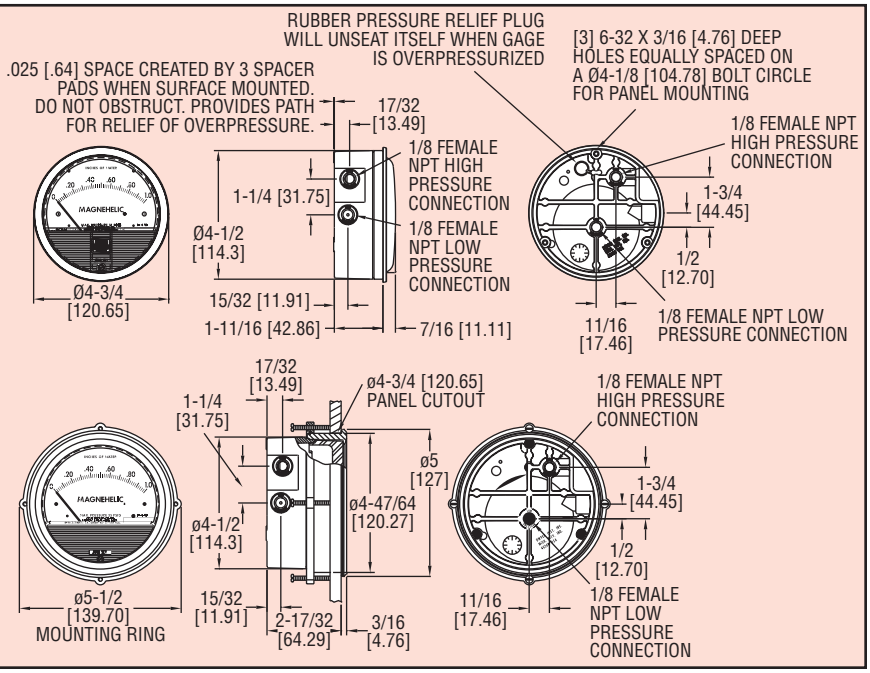

Scan here to watch product video

Select the Dwyer® Magnehelic® gage for high accuracy – guaranteed within 2% of full-scale – and for the wide choice of 81 models available to suit your needs precisely. Using Dwyer's simple, frictionless Magnehelic® gage movement, it quickly indicates low air or non-corrosive gas pressures – either positive, negative (vacuum) or differential. The design resists shock, vibration and over-pressures. No manometer fluid to evaporate, freeze or cause toxic or leveling problems. It's inexpensive, too.

The Magnehelic® gage is the industry standard to measure fan and blower pressures, filter resistance, air velocity, furnace draft, pressure drop across orifice plates, liquid levels with bubbler systems and pressures in fluid amplifier or fluidic systems. It also checks gas-air ratio controls and automatic valves, and monitors blood and respiratory pressures in medical care equipment.

MOUNTING

A single case size is used for most models of Magnehelic® gages. They can be flush or surface mounted with standard hardware supplied. Although calibrated for vertical position, many ranges above 1″ may be used at any angle by simply re-zeroing. However, for maximum accuracy, they must be calibrated in the same position in which they are used. These characteristics make Magnehelic® gages ideal for both stationary and portable applications. A 4-9/16″ hole is required for flush panel mounting. Complete mounting and connection fittings, plus instructions, are furnished with each instrument.❶

SPECIFICATIONS

Service: Air and non-combustible, compatible gases (natural gas option available). **Note:** May be used with hydrogen. Order a Buna-N diaphragm. Pressures must be less than 35 psi.
Wetted Materials: Consult factory.
Housing: Die cast aluminum case and bezel, with acrylic cover. Exterior finish is coated gray to withstand 168 hour salt spray corrosion test.
Accuracy: ±2% of FS (±3% on - 0, -100 Pa, -125 Pa, 10MM and ±4% on - 00, -60 Pa, -6MM ranges), throughout range at 70°F (21.1°C).
Pressure Limits: -20 in Hg to 15 psig† (-0.677 to 1.034 bar); MP option: 35 psig (2.41 bar); HP option: 80 psig (5.52 bar).
Overpressure: Relief plug opens at approximately 25 psig (1.72 bar), standard gages only.❷
Temperature Limits: 20 to 140°F* (-6.67 to 60°C). -20°F (-28°C) with low temperature option.
Size: 4″ (101.6 mm) diameter dial face.
Mounting Orientation: Diaphragm in vertical position. Consult factory for other position orientations.
Process Connections: 1/8″ female NPT duplicate high and low pressure taps - one pair side and one pair back.
Weight: 1 lb 2 oz (510 g), MP & HP 2 lb 2 oz (963 g).
Standard Accessories: Two 1/8″ NPT plugs for duplicate pressure taps, two 1/8″ pipe thread to rubber tubing adapter, and three flush mounting adapters with screws. (Mounting and snap ring retainer substituted for three adapters in MP & HP gage accessories.)
Agency Approval: RoHS. **Note:** -SP models not RoHS approved.

†For applications with high cycle rate within gage total pressure rating, next higher rating is recommended. See Medium and High pressure options.

ACCESSORIES



Model A-432 Portable Kit
Combine carrying case with any Magnehelic® gage of standard range, except high pressure connection. Includes 9 ft (2.7 m) of 3/16″ ID rubber tubing, standhang bracket and terminal tube with holder.

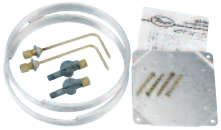

Model A-605 Air Filter Gage Accessory Kit
Adapts any standard Magnehelic® gage for use as an air filter gage. Includes aluminum surface mounting bracket with screws, two 5 ft (1.5 m) lengths of 1/4″ aluminum tubing two static pressure tips and two molded plastic vent valves, integral compression fittings on both tips and valves.

A-605B Air Filter Gage Accessory Kit, Air filter kit with two plastic open/close valves, two 4″ steel static tips, plastic tubing and mounting flange

A-605C Air Filter Gage Accessory Kit, Air filter kit with two plastic open/close valves, two plastic static tips, plastic tubing and mounting flange

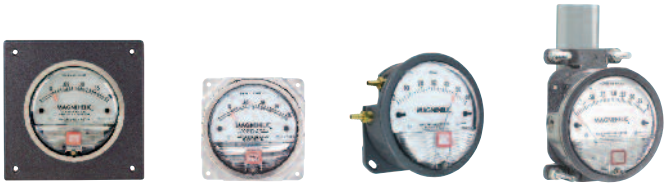

Flush, Surface, Integrated Plate or Pipe Mounted



Enclosure Mounted

❶See page 7 (Magnehelic® Gage Mounting Accessories)
❷Over Protection Note: See page 5 (Series 2000)

Series 2000

Magnehelic® Gage Models & Ranges

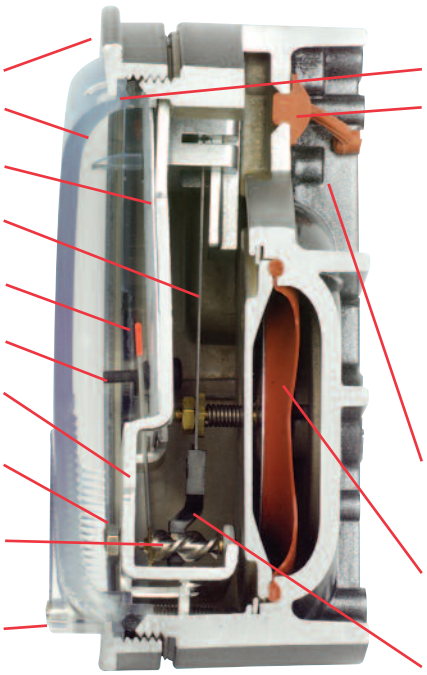

Bezel provides flange for flush mounting in panel.

Clear plastic face is highly resistant to breakage. Provides undistorted viewing of pointer and scale.

Precision litho-printed scale is accurate and easy to read.

Calibrated range spring is flat spring steel. Small amplitude of motion assures consistency and long life. It reacts to pressure on diaphragm. Live length adjustable for calibration.

Red tipped pointer of heat treated aluminum tubing is easy to see. It is rigidly mounted on the helix shaft.

Pointer stops of molded rubber prevent pointer over-travel without damage.

"Wishbone" assembly provides mounting for helix, helix bearings and pointer shaft.

Jeweled bearings are shock-resistant mounted; provide virtually friction-free motion for helix. Motion damped with high viscosity silicone fluid.

Helix is precision made from an alloy of high magnetic permeability. Mounted in jeweled bearings, it turns freely, following the magnetic field to move the pointer across the scale.

Zero adjustment screw is conveniently located in the plastic cover, and is accessible without removing cover. O-ring seal provides pressure tightness.

O-ring seal for cover assures pressure integrity of case.

OVERPRESSURE PROTECTION
Blowout plug is comprised of a rubber plug on the rear which functions as a relief valve by unseating and venting the gage interior when over pressure reaches approximately 25 psig (1.7 bar). To provide a free path for pressure relief, there are four spacer pads which maintain 0.023″ clearance when gage is surface mounted. Do not obstruct the gap created by these pads.
The blowout plug is not used on models above 180″ of water pressure, medium or high pressure models, or on gages which require an elastomer other than silicone for the diaphragm.
The blowout plug should not be used as a system overpressure control. High supply pressures may still cause the gage to fail due to over pressurization, resulting in property damage or serious injury. Good engineering practices should be utilized to prevent your system from exceeding the ratings or any component.

Die cast aluminum case is precision made and iridite-dipped to withstand 168 hour salt spray corrosion test. Exterior finished in baked dark gray hammerloid. One case size is used for all standard pressure options, and for both surface and flush mounting.

Silicone rubber diaphragm with integrally molded O-ring is supported by front and rear plates. It is locked and sealed in position with a sealing plate and retaining ring. Diaphragm motion is restricted to prevent damage due to overpressures.

Samarium Cobalt magnet mounted at one end of range spring rotates helix without mechanical linkages.

Model	Range Inches of Water
2000-00N†••	.05-0-.2
2000-00†••	0-.25
2000-0†•	0-.50
2001	0-1.0
2002	0-2.0
2003	0-3.0
2004	0-4.0
2005	0-5.0
2006	0-6.0
2008	0-8.0
2010	0-10
2012	0-12
2015	0-15
2020	0-20
2025	0-25
2030	0-30
2040	0-40
2050	0-50
2060	0-60
2080	0-80
2100	0-100
2120	0-120
2150	0-150
2160	0-160
2180*	0-180
2250*	0-250
Zero Center Ranges	
2300-00†••	0.125-0-0.125
2300-0†•	.25-0-.25
2301	.5-0-.5
2302	1-0-1
2304	2-0-2
2310	5-0-5
2320	10-0-10
2330	15-0-15

Model	Range PSI
2201	0-1
2202	0-2
2203	0-3
2204	0-4
2205	0-5
2210*	0-10
2215*	0-15
2220*	0-20
2230**	0-30
Model	**Range, CM of Water**
2000-15CM	0-15
2000-20CM	0-20
2000-25CM	0-25
2000-50CM	0-50
2000-80CM	0-80
2000-100CM	0-100
2000-150CM	0-150
2000-200CM	0-200
2000-250CM	0-250
2000-300CM	0-300
Zero Center Ranges	
2300-4CM	2-0-2
2300-10CM	5-0-5
2300-30CM	15-0-15

†These ranges calibrated for vertical scale position.
• Accuracy +/-3%
• • Accuracy +/-4%
*MP option standard
**HP option standard

Model	Range MM of Water
2000-6MM†••	0-6
2000-10MM†•	0-10
2000-15MM	0-15
2000-25MM	0-25
2000-30MM	0-30
2000-50MM	0-50
2000-80MM	0-80
2000-100MM	0-100
2000-125MM	0-125
2000-150MM	0-150
2000-200MM	0-200
2000-250MM	0-250
2000-300MM	0-300
Zero Center Ranges	
2300-6MM†••	3-0-3
2300-10MM†•	5-0-5
2300-20MM†•	10-0-10
Model	**Range, Pa**
2000-60NPA†••	10-0-50
2000-60PA†••	0-60
2000-100PA†•	0-100
2000-125PA†•	0-125
2000-250PA	0-250
2000-300PA	0-300
2000-500PA	0-500
2000-750PA	0-750
2000-1000PA	0-1000
Zero Center Ranges	
Model	**Range, Pa**
2300-60PA†••	30-0-30
2300-100PA†•	50-0-50
2300-120PA	60-0-60
2300-200PA	100-0-100
2300-250PA	125-0-125
2300-300PA	150-0-150
2300-500PA	250-0-250
2300-1000PA	500-0-500

Model	Range, kPa
2000-0.5KPA	0-0.5
2000-1KPA	0-1
2000-1.5KPA	0-1.5
2000-2KPA	0-2
2000-2.5KPA	0-2.5
2000-3KPA	0-3
2000-4KPA	0-4
2000-5KPA	0-5
2000-8KPA	0-8
2000-10KPA	0-10
2000-15KPA	0-15
2000-20KPA	0-20
2000-25KPA	0-25
2000-30KPA	0-30
Zero Center Ranges	
2300-1KPA	.5-0-.5
2300-2KPA	1-0-1
2300-2.5KPA	1.25-0-1.25
2300-3KPA	1.5-0-1.5

Dual Scale Air Velocity Units
For use with pitot tube

Model	Range in W.C./ Velocity F.P.M.
2000-00AV†••	0-.25/ 300-2000
2000-0AV†•	0-.50/ 500-2800
2001AV	0-1.0/ 500-4000
2002AV	0-2.0/ 1000-5600
2005AV	0-5.0/ 2000-8800
2010AV	0-10/ 2000-12500

Dual Scale English/Metric Models

Model	Range, in w.c.	Range, Pa or kPa
2000-00D†••	0-.25	0-62 Pa
2000-0D†•	0-0.5	0-125 Pa
2001D	0-1.0	0-250 Pa
2002D	0-2.0	0-500 Pa
2003D	0-3.0	0-750 Pa
2004D	0-4.0	0-1.0 kPa
2005D	0-5.0	0-1.25 kPa
2006D	0-6.0	0-1.5 kPa
2008D	0-8.0	0-2.0 kPa
2010D	0-10	0-2.5 kPa
2015D	0-15	0-3.7 kPa
2020D	0-20	0-5 kPa
2025D	0-25	0-6.2 kPa
2050D	0-50	0-12.4 kPa
2060D	0-60	0-15 kPa

VELOCITY AND VOLUMETRIC FLOW UNITS
Scales are available on the Magnehelic® that read in velocity units (FPM, m/s) or volumetric flow units (SCFM, m^3/s, m^3/h). Stocked velocity units with dual range scales in inches w.c. and feet per minute are shown above. For other ranges contact the factory.
When ordering volumetric flow scales please specify the maximum flow rate and its corresponding pressure. Example: 0.5 in w.c. = 16,000 CFM.

ACCESSORIES
A-321, Safety Relief Valve
A-448, 3-piece magnet kit for mounting Magnehelic® gage directly to magnetic surface
A-135, Rubber gasket for panel mounting
A-401, Plastic Carry Case



A-310A 3-Way Vent Valves
In applications where pressure is continuous and the Magnehelic® gage is connected by metal or plastic tubing which cannot be easily removed, we suggest using Dwyer A-310A vent valves to connect gage. Pressure can then be removed to check or re-zero the gage.

LABELLA Associates, P.C. | Engineering Architecture Environmental Planning

APPENDIX C

LNAPL MONITORING FORM

LABELLA Associates, D.P.C.

300 STATE STREET, SUITE 201
ROCHESTER, NEW YORK 14614
PHONE: (585) 454-6110
FAX: (585-454-3066

LNAPL INSPECTION FORM

PROJECT NAME: NYSDEC BCP SITE NO. C828159
LOCTION: 690 ST. PAUL STREET, ROCHESTER, NEW YORK
PROJECT NO.: 209280
INSPECTED BY:
DATE:
WEATHER:

INSPECTION EVENT		WELL ID	DEVICE USED TO MEASURE LNAPL	LNAPL OBSERVED	ESTIMATED THICKNESS OF LNAPL LAYER [INCHES]	ABSORBENT SOCK INSTALLED	COMMENTS
SEMI-ANNUAL	ANNUAL						
		BW-1	BAILER / OIL-WATER PROBE	YES / NO		YES / NO	
		RW-EAST	BAILER / OIL-WATER PROBE	YES / NO		YES / NO	
		RW-WEST	BAILER / OIL-WATER PROBE	YES / NO		YES / NO	
		REC-B-EAST	BAILER / OIL-WATER PROBE	YES / NO		YES / NO	
		REC-B-WEST	BAILER / OIL-WATER PROBE	YES / NO		YES / NO	
		BW-14	BAILER / OIL-WATER PROBE	YES / NO		YES / NO	
		BW-15	BAILER / OIL-WATER PROBE	YES / NO		YES / NO	

How to use the PIG® SUMP SKIMMER

PIG® Sump Skimmers remove oily contaminants from water in sumps. Attach a rope to lower and raise Skimmer from the water's surface.

Follow these easy steps to assure maximum effectiveness:

1. Choose the size that best suits your needs.

PIG® Sump Skimmers come in two diameters: 3" x 18" • 8" x 18".

2. Attach rope to loop in Skimmer.

Choose a length that will let you lower sock to surface of water in sump and raise it after saturation.

3. Place Skimmer in sump.

Let it float on water while absorbing oily contaminants. As the Skimmer absorbs, it gradually floats lower in the water. Oil is pulled into fresh absorbent.

4. Replace as necessary.

When completely saturated, the Skimmer bobs at the water's surface. Just pull it out with your rope.

5. Dispose of Skimmer properly.

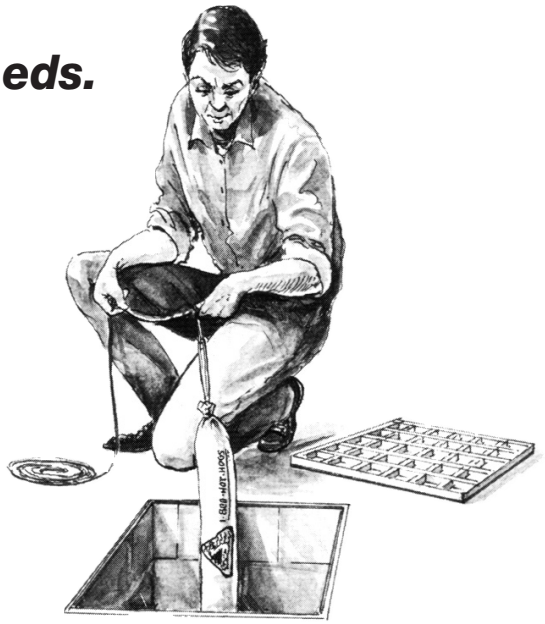

WHERE TO USE

- Sumps
- Bilges
- Sludge Tanks
- Sludge Ponds

Other PIG® products for you

Block, contain, absorb oils from water

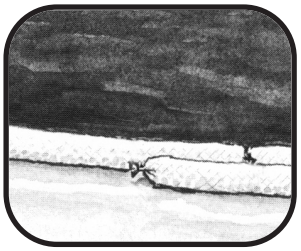

High volume SPAGHETTI booms

Absorbs oil repels water:

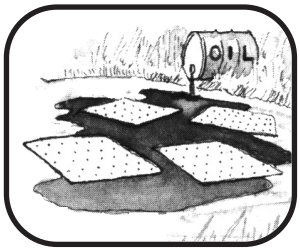

Skimming PIG® mat sheets and rolls

Contingency Planner's Dream:

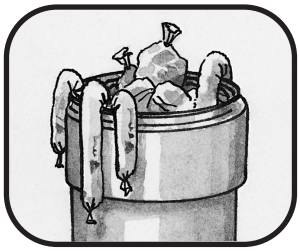

Spill Kit for accidental spills

You want to know more about these products?

GREAT! Just call our toll-free number and we'll send you a **FREE PIGALOG®** catalog filled with information on all PIG® products.

In North America Phone:

1-800-HOT-HOGS®

www.newpig.com

New Pig • One Pork Ave.
Tipton, PA 16684-0304

PIG® is a registered trademark of NEW PIG CORPORATION



PIG® Sump Skimmer

SKM403 8" x 18", Absorbs up to 1.8 gal. per sock, 12 socks

Sized to pull oil out of your sumps, tanks, and bilges.

- Simply lower this floating skimmer into any water-based liquid to absorb oils without taking in water
- Ideal for soaking up unwanted oil-based fluids that collect in sumps, tanks and bilges
- Polypropylene loop can be attached to rope (not included) for easy deployment and retrieval
- Absorbs and retains oils and oil-based liquids - including lubricants and fuels - without taking in a drop of water
- Bright white color makes absorbed oil easier to see; clearly shows saturation level
- Can be incinerated after use to reduce waste or for fuels blending
- Spaghetti strip filler is designed for capturing thick oils or other viscous liquids
- Tough outer mesh is UV resistant for long-term outdoor use without degradation; lets fluids easily pass through to filler material

EXCLUSIVE

Specifications

Fluid Absorbed	Oil-Based Liquids - Not Water
Color	White
Dimensions	ext. dia. 8" x 18" L
Absorbency	Up to 21.6 gal. per box
Absorbency per	Up to 1.8 gal. per sock
Configuration	Skimmer
Filler	Polypropylene
Skin/Outer Mesh	Outer Mesh - Polyester
Sold as	12 socks per box
Weight	22.3 lbs.
# per Pallet	16
Composition	Skin - Polyester Mesh Filler - 100% Polypropylene
Application	Storm Preparedness
UNSPSC	47131904
Pigalog® Page Number	Page 61

Metric Equivalent

Absorbency per	Up to 6.8 L per sock
Absorbency	Up to 81.8 L per box
Dimensions	ext. dia. 20.3cm x 45.7cm L

Weight	10.1 kg

Technical Information

Technical Documents (available on newpig.com)

Instructions for Using PIG® Sump Skimmer

PIG® Oil-Only Absorbents

40 CFR 122.26

New Pig
World's best stuff for leaks, drips and spills.

One Pork Avenue • Tipton, PA 16684-0304
1-855-493-4647 • Fax: 1-800-621-7447• newpig.com • hothogs@newpig.com

Safety Data Sheet

1. Product And Company Identification

Product Identifier: Oil-Only PIG Absorbents (MSD-016)
General Use: Oil-Only PIG Absorbents are designed to confine and absorb oil-based chemicals such as oil, gasoline, kerosene, diesel fuel, vegetable oil, etc., while repelling water and water-based products from machinery, leaks, drips, over-spray and spills.
Specific Product Identifier: PIG Oil-Only Absorbent Mat, PIG FAT MAT Oil-Only Absorbent Mat, PIG Rip-n-Fit Oil-Only Absorbent Mat, PIG 4-in-1 Oil-Only Absorbent Mat, PIG Brown Oil-Only Absorbent Mat, PIG Ham-O Oil-Only Absorbent Mat, PIG Oil-Only UV-Resistant Absorbent Mat, PIG Oil-Only Railroad Absorbent Mat, PIG Absorbent Ground Tarp System, PIG Leak and Drip Pad, PIG Coolant Skimming Pad, PIG Oil-Only Barrel Top Absorbent Mat, PIG UV-Resistant Oil-Only Barrel Top Absorbent Mat, PIG Oil-Only Absorbent Diaper Mat, Oil-Only Mop System, PIG Oil-Only Absorbent Sock, PIG Skimmer Sock, PIG Spaghetti Boom, PIG Oil-Only Absorbent Boom, PIG Dark Oil-Only Absorbent Boom, PIG Skimming Sweep, PIG Sump Skimmer, PIG Monitoring Well Skimming Sock, PIG Rigid Monitoring Well Sock, PIG Skimmer Pillow, PIG Spaghetti Pillow, PIG Printer's Pillow, PIG Poly-Back Oil-Only Absorbent Pillow, PIG Outdoor Pan, PIG PomPom Oil-Mops, PIG Oil-Only Absorbent Valve Wrap, PIG Oil Only Pulp, PIG LeakTrapper Absorbent Bag, PIG LeakTrapper Absorbent Valve Wrap, PIG Oil only heavy Fluids Mat, PIG SunSafe™ UV-Resistant Mat, STAT-MAT Absorbents, Static Dissipative Skimming PIG Mat, PIG Brown Oil Only Poly Back Mat, PIG Oil Only Brown Mat.
Product Description: These white, yellow, blue, green, brown, black, or Multi-Colored absorbents are provided in many forms such as a mat (pad or rolls), spaghetti strips (pads cut into thin strips), pom-pom, pulp (mat ground into a particulate) or may come in a pan.

COMPANY PROFILE:
New Pig Corporation
One Pork Avenue
Tipton, PA 16684-0304
Information Number
1-800-468-4647

EMERGENCY TELEPHONE:
INFOTRAC
200 North Palmetto Street
Leesburg, FL 34748
24 hrs, 7 days/week
1-800-535-5053

Website: www.newpig.com, **Email:** hothogs@newpig.com

2. Hazards Identification

GHS Classification: Not a dangerous substance according to GHS

POTENTIAL HEALTH EFFECTS:
Eye Contact: May cause irritation
Ingestion: No hazard in normal use of product
Inhalation: No hazard in normal use of product
Skin Contact: Not applicable
Chronic: Not applicable

3. Composition/Information on Ingredients

CAS: 9003-07-0	Polypropylene	>97%

May contain one or more of the following:

CAS: None	Brown pigment	<0.3%
CAS: None	Zelec-Anti Static Agent	
CAS: 9003-07-0	Polypropylene: Film, Tywrap, Rope Mesh	
CAS: 9002-88-4	Polyethylene Film, Cord	
CAS: Not Avail.	Grommets, Steel Wire Tie, Aluminum Clip	
CAS: 25038-59-9	Polyester Fleece or Mesh	
CAS: 9003-07-0	Pan: Polypropylene	
CAS: 9002-86-2	Pan: PVC	
Ink		
CAS: 1336-21-6 EC: 215-647-6	Aqua Ammonia	1-1.5%
CAS: 108-01-0 EC: 203-542-8	Dimethylethanolamine	1-1.5%

4. First Aid Measures

Eye Contact: Flush with water for 15 minutes. If irritation persists, consult a physician.
Ingestion: Not applicable
Inhalation: Not applicable
Skin Contact: Not applicable

5. Fire Fighting Measures

Extinguishing Media: Unused form: Not applicable Used form: that which is compatible to liquid(s) absorbed.
Special Fire Fighting Procedures: Wear a self-contained breathing apparatus and refer to absorbed liquid(s) SDS(s).
Hazardous Combustion Products: When heated above the melting point: carbon monoxide, carbon dioxide, acrolein, ketones, aldehydes and other unidentified organic compounds.
Unusual Hazards: Refer to absorbed liquid(s) SDS(s). The Oil-Only PIG Absorbents do not render liquids nonflammable, neutral or less hazardous.

6. Accidental Release Measures

Spill or Leak Procedures: If material is unused, sweep or pick up and dispose of as a non-hazardous material.

7. Handling and Storage

Handling Precautions: Camouflage pig pattern not recommended for use with solvents or aggressive liquids that may affect printed pattern.
Storage Precautions: Store in a cool, dry place. Shelf Life: Indefinitely - as long as product is kept in a clean, dry place away from direct sunlight.
General: Refer to absorbed liquid(s) SDS(s). The container can be hazardous when empty. Follow label cautions even after the container is empty. Do not re-use empty containers for food, clothing or products for human or animal consumption, or where skin contact can occur.

Safety Data Sheet

8. Exposure Controls/Personal Protection

Engineering Controls: None required
PERSONAL PROTECTION
Eyes: Safety glasses with side shields is a good industrial practice
Respirator: Not required.
Gloves: Not normally required. However, use of cloth, canvas or leather gloves is a good industrial practice.
Other: None required.
OSHA HAZARDOUS COMPONENTS (29 CFR 1910.1200):

	EXPOSURE LIMITS 8 hrs. TWA (ppm)	
	OSHA PEL	ACGIH TLV
None		

9. Physical and Chemical Properties

Appearance: White, yellow, blue, green, brown, black or multi-colored polymer material in a variety of shapes, may also be in a black pan. Interior color may vary.
Odor: No odor **Odor Threshold:** Not applicable
pH: Not applicable
MELTING POINT/Freezing Point**:** >320° F (>160° C)
Initial Boiling Point and Range: Not applicable
Flash Point: Not applicable **Method:** Not applicable
Evaporation Rate: Not applicable
Flammable Limits: Not applicable
Conditions of Flammability: Not established
Explosive Properties: Not applicable
Vapor Pressure: Not applicable
Vapor Density: Not applicable
Relative Density (H_20 = 1): 0.9
Solubility in Water: Insoluble
Auto Ignition Temperature: 675° F (357° C)
Coefficient of Water/Oil Distribution: Not available

10. Stability and Reactivity

General: This is a stable material.
Conditions of Reactivity: Not established
Incompatible Materials: Strong oxidizing agents may degrade product over an extended period of time.
Conditions to Avoid: Not applicable
Hazardous Decomposition: When heated, it may emit toxic fumes.
Hazardous Polymerization: Will not occur

11. Toxicological Information

LD50: Not available
LC50: Not available
Carcinogenicity: IARC: Not established
National Toxicology Program: Not established
OSHA: Not established
California Prop 65: No listed ingredient

11. Toxicological Information (Cont'd)

Reproduction Toxicity: Not available
Teratogenicity: Not available
Mutagenicity: Not available
Synergistic Products: Not available
Irritancy of Product: See Section 2.
Sensitization to Product: Not available

12. Ecological Information

No data available

13. Disposal Considerations

Waste Disposal Method: If unused, no special precautions are necessary. Dispose of in accordance with federal, state and local regulations. In certain types of cleanup applications the nature of the material recovered will classify the resulting spent material as a hazardous component. In such instances the material should be disposed of via an approved hazardous waste disposal service and the appropriate manifesting obtained.

14. Transport Information

DOT (Department of Transportation):
Proper Shipping Name: Not regulated
Hazard Class: Not regulated
Identification Number: Not applicable

15. Regulatory Information

CERCLA (Comprehensive Environmental Response Compensation and Liability Act): No Reportable Quantity
OSHA Hazard Communication Standard, 29 CFR 1910.1200: No listed ingredient
SARA Title III (Superfund Amendments and Reauthorization Act): No listed ingredient
TSCA (Toxic Substances Control Act): Ingredients of this product are on the Inventory list.

16. Other Information

WHMIS Classification: Not a controlled product.

Reason for Issue: Reviewed, changes to Sections 4 & 16.
Prepared by: Dale Gatehouse, Entreprises Krenda Inc.
Approved by: Lisa Baxter, New Pig Corporation
Previous Date of Issue: 04/14/2015
Revised Date: 02/03/2016
SDS Number: MSD-016

The following is in lieu of all warranties, expressed or implied: All information provided is based on testing and data believed to be accurate.

LABELLA Associates, P.C. | Engineering Architecture Environmental Planning

APPENDIX D

SOIL COVER INSPECTION FORM

LABELLA Associates, D.P.C.
300 STATE STREET, SUITE 201
ROCHESTER, NEW YORK 14614
PHONE: (585) 454-6110
FAX: (585-454-3066

SOIL COVER SYSTEM (OR CAP) INSPECTION FORM

PROJECT NAME: NYSDEC BCP SITE NO. C828159
LOCTION: 690 ST. PAUL STREET, ROCHESTER, NEW YORK
PROJECT NO.: 209280
INSPECTED BY:
DATE:
WEATHER:

COVER TYPE	OVERALL CONDITION	ANY LOCATIONS REQUIRE REPAIR OR MAINTENANCE	PHOTOS TAKEN	COMMENTS
SOIL COVER		YES / NO	YES / NO	
ASPHALT SURFACE		YES / NO	YES / NO	
CONCRETE SURFACE		YES / NO	YES / NO	
BUILDING SLAB		YES / NO	YES / NO	
AOC #6D SOIL CAP		YES / NO	YES / NO	

LABELLA Associates, P.C. | Engineering Architecture Environmental Planning

APPENDIX E

WELL NETWORK INSPECTION

LABELLA Associates, D.P.C.

300 STATE STREET, SUITE 201
ROCHESTER, NEW YORK 14614
PHONE: (585) 454-6110
FAX: (585-454-3066

MONITORING AND INJECTION WELL INSPECTION FORM

PROJECT NAME: NYSDEC BCP SITE NO. C828159
LOCTION: 690 ST. PAUL STREET, ROCHESTER, NEW YORK
PROJECT NO.: 209280
INSPECTED BY:
DATE:
WEATHER:

WELL ID	EVIDENCE OF DAMAGE	EVIDENCE OF FROST HEAVING	EVIDENCE OF CASING DAMAGE OR WEAR	LOCK IN PLACE	EVIDENCE OF WELL SUBSIDENCE	STANDING OR PONDING WATER	CORRECTIVE ACTION MEASURES TAKEN	COMMENTS
	YES / NO	YES / NO	YES / NO	YES / NO	YES / NO	YES / NO	YES / NO	
	YES / NO	YES / NO	YES / NO	YES / NO	YES / NO	YES / NO	YES / NO	
	YES / NO	YES / NO	YES / NO	YES / NO	YES / NO	YES / NO	YES / NO	
	YES / NO	YES / NO	YES / NO	YES / NO	YES / NO	YES / NO	YES / NO	
	YES / NO	YES / NO	YES / NO	YES / NO	YES / NO	YES / NO	YES / NO	
	YES / NO	YES / NO	YES / NO	YES / NO	YES / NO	YES / NO	YES / NO	
	YES / NO	YES / NO	YES / NO	YES / NO	YES / NO	YES / NO	YES / NO	
	YES / NO	YES / NO	YES / NO	YES / NO	YES / NO	YES / NO	YES / NO	
	YES / NO	YES / NO	YES / NO	YES / NO	YES / NO	YES / NO	YES / NO	
	YES / NO	YES / NO	YES / NO	YES / NO	YES / NO	YES / NO	YES / NO	

APPENDIX 6

EXCAVATION WORK PLAN

APPENDIX 6 – EXCAVATION WORK PLAN (EWP)

1 NOTIFICATION

At least 15 days prior to the start of any activity that is anticipated to encounter remaining contamination, the site owner or their representative will notify the NYSDEC. Table 1 includes contact information for the above notification. The information on this table will be updated as necessary to provide accurate contact information. A full listing of site-related contact information is provided in Appendix 2.

Table 1: Notifications*

[Central Office NYSDEC Representative]	[phone] [email address]
NYSDEC DER Project Manager – Mr. Frank Sowers	585-226-5357 / frank.sowers@dec.ny.gov
NYSDEC Site Control – Ms. Kelly Lewandowski	518-402-9553/ kelly.lewandowski@dec.ny.us

* Note: Notifications are subject to change and will be updated as necessary.

This notification will include:

- A detailed description of the work to be performed, including the location and areal extent of excavation, plans/drawings for site re-grading, intrusive elements or utilities to be installed below the soil cover, estimated volumes of contaminated soil to be excavated and any work that may impact an engineering control;
- A summary of environmental conditions anticipated to be encountered in the work areas, including the nature and concentration levels of contaminants of concern, potential presence of grossly contaminated media, and plans for any pre-construction sampling;
- A schedule for the work, detailing the start and completion of all intrusive work;
- A summary of the applicable components of this EWP;

- A statement that the work will be performed in compliance with this EWP and 29 CFR 1910.120;
- A copy of the contractor's health and safety plan (HASP), in electronic format, if it differs from the HASP provided in Appendix 4 of this SMP;
- Identification of disposal facilities for potential waste streams; and
- Identification of sources of any anticipated backfill, along with all required chemical testing results.

2 SOIL SCREENING METHODS

Visual, olfactory and instrument-based (e.g. photoionization detector) soil screening will be performed by a qualified environmental professional during all excavations into known or potentially contaminated material (remaining contamination). Soil screening will be performed when invasive work is done and will include all excavation and invasive work performed during development, such as excavations for foundations and utility work, after issuance of the COC.

Soils will be segregated based on previous environmental data and screening results into material that requires off-site disposal and material that requires testing to determine if the material can be reused on-site as soil beneath a cover or if the material can be used as cover soil. Further discussion of off-site disposal of materials and on-site reuse is provided in Section 6 and Section 7 of this Appendix.

3 SOIL STAGING METHODS

Soil stockpiles will be continuously encircled with a berm and/or silt fence. Hay bales will be used as needed near catch basins, surface waters and other discharge points.

Stockpiles will be kept covered at all times with appropriately anchored tarps. Stockpiles will be routinely inspected and damaged tarp covers will be promptly replaced.

Stockpiles will be inspected at a minimum once each week and after every storm event. Results of inspections will be recorded in a logbook and maintained at the site and available for inspection by the NYSDEC.

4 MATERIALS EXCAVATION AND LOAD-OUT

A qualified environmental professional or person under their supervision will oversee all invasive work and the excavation and load-out of all excavated material.

The owner of the property and remedial party (if applicable) and its contractors are responsible for safe execution of all invasive and other work performed under this Plan.

The presence of utilities and easements on the site will be investigated by the qualified environmental professional. It will be determined whether a risk or impediment to the planned work under this SMP is posed by utilities or easements on the site.

Loaded vehicles leaving the site will be appropriately lined, tarped, securely covered, manifested, and placarded in accordance with appropriate Federal, State, local, and NYSDOT requirements (and all other applicable transportation requirements).

A truck wash will be operated on-site, as appropriate. The qualified environmental professional will be responsible for ensuring that all outbound trucks will be washed at the truck wash before leaving the site until the activities performed under this section are complete Truck wash waters will be collected and disposed of off-site in an appropriate manner.

Locations where vehicles enter or exit the site shall be inspected daily for evidence of off-site soil tracking.

The qualified environmental professional will be responsible for ensuring that all egress points for truck and equipment transport from the site are clean of dirt and other materials derived from the site during intrusive excavation activities. Cleaning of the adjacent streets will be performed as needed to maintain a clean condition with respect to site-derived materials.

5 MATERIALS TRANSPORT OFF-SITE

All transport of materials will be performed by licensed haulers in accordance with appropriate local, State, and Federal regulations, including 6 NYCRR Part 364. Haulers will be appropriately licensed and trucks properly placarded.

Material transported by trucks exiting the site will be secured with tight-fitting covers. Loose-fitting canvas-type truck covers will be prohibited. If loads contain wet material capable of producing free liquid, truck liners will be used.

Truck transport routes are as follows: Once loaded all trucks will head south on Martin Street, then right/west on Upper falls Boulevard, then left/south on St. Paul Street, and then right/west onto the Inner Loop. Once on the Inner Loop trucks will continue to either NYS Route 490 east or west with the final route dependent on the designated disposal facility (see attached figure). All trucks loaded with site materials will exit the vicinity of the site using only these approved truck routes. This is the most appropriate route and takes into account: (a) limiting transport through residential areas and past sensitive sites; (b) use of city mapped truck routes; (c) prohibiting off-site queuing of trucks entering the facility; (d) limiting total distance to major highways; (e) promoting safety in access to highways; and (f) overall safety in transport.

Trucks will be prohibited from stopping and idling in the neighborhood outside the project site.

Egress points for truck and equipment transport from the site will be kept clean of dirt and other materials during site remediation and development.

Queuing of trucks will be performed on-site in order to minimize off-site disturbance. Off-site queuing will be prohibited.

6 MATERIALS DISPOSAL OFF-SITE

All material excavated and removed from the site will be treated as contaminated and regulated material and will be transported and disposed in accordance with all local, State (including 6NYCRR Part 360) and Federal regulations. If disposal of material from this site is proposed for unregulated off-site disposal (i.e. clean soil removed for development purposes), a formal request with an associated plan will be made to the NYSDEC. Unregulated off-site management of materials from this site will not occur without formal NYSDEC approval.

Off-site disposal locations for excavated soils will be identified in the pre-excavation notification. This will include estimated quantities and a breakdown by class of disposal facility if appropriate, i.e. hazardous waste disposal facility, solid waste landfill, petroleum treatment facility, C/D recycling facility, etc. Actual disposal quantities and associated documentation will be reported to the NYSDEC in the Periodic Review Report. This documentation will include: waste profiles, test results, facility acceptance letters, manifests, bills of lading and facility receipts.

Non-hazardous historic fill and contaminated soils taken off-site will be handled, at minimum, as a Municipal Solid Waste per 6NYCRR Part 360-1.2. Material that does not meet Unrestricted SCOs is prohibited from being taken to a New York State recycling facility (6NYCRR Part 360-16 Registration Facility).

7 MATERIALS REUSE ON-SITE

Soil will be considered appropriate for reuse as on-site backfill within the soil layer if contaminant concentrations are less than the DER-10 Appendix 5 Allowable Constituent Levels for Restricted Residential Use. Soil will be stockpiled in accordance with Section 1.3. Soil excavated from below the site cover system that has chemical or petroleum odors, visual chemical or petroleum staining, or elevated PID readings above five (5) parts per million (ppm) will not be reused on-site but will be characterized for off-site disposal.

The qualified environmental professional will ensure that procedures defined for materials reuse in this SMP are followed and that unacceptable material does not remain on-site. Contaminated on-site material, including historic fill and contaminated soil, that is acceptable for reuse on-site will be placed below the demarcation layer or impervious surface, and will not be reused within a cover soil layer, within landscaping berms, or as backfill for subsurface utility lines. A Request to Import/Reuse Fill or Soil form, which can be found at http://www.dec.ny.gov/regulations/67386.html, will be prepared and submitted to the NYSDEC project manager allowing a minimum of 5 business days for review.

Any demolition material proposed for reuse on-site will be sampled for asbestos and the results will be reported to the NYSDEC for acceptance. Concrete crushing or processing on-site will not be performed without prior NYSDEC approval. Organic matter (wood, roots, stumps, etc.) or other solid waste derived from clearing and grubbing of the site will not be reused on-site.

8 FLUIDS MANAGEMENT

All liquids to be removed from the site, including but not limited to, excavation dewatering, decontamination waters and groundwater monitoring well purge and development waters, will be handled, transported and disposed in accordance with applicable local, State, and Federal regulations. Dewatering, purge and development fluids will not be recharged back to the land surface or subsurface of the site, and will be managed off-site, unless prior approval is obtained from NYSDEC.

Discharge of water generated during large-scale construction activities to surface waters (i.e. a local pond, stream or river) will be performed under a SPDES permit.

9 COVER SYSTEM RESTORATION

After the completion of soil removal and any other invasive activities the cover system will be restored in a manner that complies with the RAWP. The existing cover system is comprised of a minimum of 12 or 24 inches of clean soil, asphalt pavement, concrete covered sidewalks and concrete building, etc. The demarcation layer, consisting of orange snow fencing material, white geotextile or equivalent material, etc. will be replaced to provide a visual reference to the top of the remaining contamination zone, the zone that requires adherence to special conditions for disturbance of remaining contaminated soils defined in this SMP. If the type of cover system changes from that which exists prior to the excavation (i.e., a soil cover is replaced by asphalt), this will constitute a modification of the cover element of the remedy and the upper surface of the remaining contamination. A figure showing the modified surface will be included in the subsequent Periodic Review Report and in an updated SMP.

10 BACKFILL FROM OFF-SITE SOURCES

All materials proposed for import onto the site will be approved by the qualified environmental professional and will be in compliance with provisions in this SMP prior to receipt at the site. A Request to Import/Reuse Fill or Soil form, which can be found at http://www.dec.ny.gov/regulations/67386.html, will be prepared and submitted to the NYSDEC project manager allowing a minimum of 5 business days for review.

Material from industrial sites, spill sites, or other environmental remediation sites or potentially contaminated sites will not be imported to the site.

All imported soils will meet the backfill and cover soil quality standards established in 6NYCRR 375-6.7(d). Soils that meet 'exempt' fill requirements under 6 NYCRR Part 360, but do not meet backfill or cover soil objectives for this site, will not be imported onto the site without prior approval by NYSDEC. Solid waste will not be imported onto the site.

Trucks entering the site with imported soils will be securely covered with tight fitting covers. Imported soils will be stockpiled separately from excavated materials and covered to prevent dust releases.

11 STORMWATER POLLUTION PREVENTION

Barriers and hay bale checks will be installed and inspected once a week and after every storm event. Results of inspections will be recorded in a logbook and maintained at the site and available for inspection by the NYSDEC. All necessary repairs shall be made immediately.

Accumulated sediments will be removed as required to keep the barrier and hay bale check functional.

All undercutting or erosion of the silt fence toe anchor shall be repaired immediately with appropriate backfill materials.

Manufacturer's recommendations will be followed for replacing silt fencing damaged due to weathering.

Erosion and sediment control measures identified in the SMP shall be observed to ensure that they are operating correctly. Where discharge locations or points are accessible, they shall be inspected to ascertain whether erosion control measures are effective in preventing significant impacts to receiving waters.

Silt fencing or hay bales will be installed around the entire perimeter of the construction area.

12 EXCAVATION CONTINGENCY PLAN

If underground tanks or other previously unidentified contaminant sources are found during post-remedial subsurface excavations or development related construction, excavation activities will be suspended until sufficient equipment is mobilized to address the condition.

Sampling will be performed on product, sediment and surrounding soils, etc. as necessary to determine the nature of the material and proper disposal method. Chemical analysis will be performed for a full list of analytes (TAL metals; TCL volatiles and semi-volatiles, TCL pesticides and PCBs), unless the site history and previous sampling results provide a sufficient justification to limit the list of analytes. In this case, a reduced list of analytes will be proposed to the NYSDEC for approval prior to sampling.

Identification of unknown or unexpected contaminated media identified by screening during invasive site work will be promptly communicated by phone to NYSDEC's Project Manager. Reportable quantities of petroleum product will also be reported to the NYSDEC spills hotline. These findings will be also included in the Periodic Review Report.

13 OTHER NUISANCES

A plan for rodent control will be developed and utilized by the contractor prior to and during site clearing and site grubbing, and during all remedial work.

A plan will be developed and utilized by the contractor for all remedial work to ensure compliance with local noise control ordinances.

APPENDIX 7

QUALITY ASSURANCE PROJECT PLAN

Quality Assurance Project Plan

Location:

690 Saint Paul
BCP Site #C828159
Rochester, New York

Prepared For:

Genesee Valley Real Estate Company, LLC
First Federal Plaza
28 East Main Street, Suite 500
Rochester, New York 14614

LaBella Project No. 209280

July 2016

Quality Assurance Project Plan

Location:

690 Saint Paul
BCP Site #C828159
Rochester, New York

Prepared For:

Genesee Valley Real Estate Company, LLC
First Federal Plaza
28 East Main Street, Suite 500
Rochester, New York 14614

LaBella Project No. 209280

July 2016

LaBella Associates, D.P.C.
300 State Street
Rochester, New York 14614

Table of Contents

Page

1. Introduction 1

2. Quality Control Objectives 1
   - 2.1. Accuracy 2
   - 2.2. Precision 2
   - 2.3. Completeness 2
   - 2.4. Representativeness 2
   - 2.5. Comparability 3

3. Measurement of Data Quality 3
   - 3.1. Accuracy 3
   - 3.2. Precision 3
   - 3.3. Completeness 4
   - 3.4. Representativeness 4

4. QC Targets 4

5. Sampling Procedures 5

6. Soil & Groundwater Investigation 5

7. Geologic Logging and Sampling 8

8. Hydraulic Conductivity Testing Procedures 8

9. Groundwater Sampling Procedures 10

10. Geotechnical Sampling 10

11. Management of Investigative-Derived Waste 10

12. Decontamination 12

13. Sample Containers 12

14. Sample Custody 14

Table of Contents (continued)

Page

15. Chain-of-Custody 15
15.1. Field Custody Procedures 15
15.2. Sample Tags 15
15.3. Transfer of Custody and Shipment 15
15.4. Chain-of-Custody Record 16
15.5. Laboratory Custody Procedures 16
15.6. Custody Seals 16

16. Documentation 16
16.1. Sample Identification 16
16.2. Daily Logs 17

17. Corrections to Documentation 18
17.1. Notebook 18
17.2. Sampling Forms 18
17.3. Photographs 18

18. Sample Handling, Packaging, and Shipping 18
18.1. Sample Packaging 19
18.2. Shipping Containers 19
18.3. Marking and Labeling 20

19. Calibration Procedures and Frequency 20

20. Field Instrumentation 20
20.1. Photovac Micro Tip Flameionizer (FID) 20
20.2. Photovac/MiniRea Photoionization Detector (PID) 20
20.3. Organic Vapor Analyzer 20
20.4. Conductance, Temperature, and pH Tester 21
20.5. 0_2/Explosimeter 22
20.6. Nephelometer (Turbidity Meter) 22
20.6. S.E. International Radiation Monitor Model 4EC 23

21. Internal Quality Control Checks 23
21.1. Blank Samples 23
21.2. Field Blanks 23
21.3. Field Duplicates 24
21.4. Quality Control Check Samples 24

1. Introduction

The Quality Assurance Project Plan (QAPP) contains procedures which provide for collected data to be properly evaluated, and document that quality control (QC) procedures have been followed in the collection of samples. The quality control program represents the methodology and measurement procedures used in collecting quality field data. This methodology includes the proper use of equipment, documentation of sample collection, and sample handling practices.

Procedures used in the firm's QAPP are compatible with federal, state, and local regulations, as well as, appropriate professional and technical standards.

This QAPP has been organized into the following areas:

- Quality Control Objectives and Checks
- Field Equipment, Handling, and Calibration
- Sampling Techniques
- Sample Handling and Packaging

It should be noted that project-related documents may have project specific details that will differ from the procedures in this QAPP. In such cases, the project-related documents should be followed (subsequent to regulatory approval).

2. Quality Control Objectives

The United States Environmental Protection Agency (EPA) has identified five general levels of analytical data quality as being potentially applicable to site investigations conducted under CERCLA. These levels are summarized below:

- **Level I -** Field screening. This level is characterized by the use of portable instruments, which can provide real-time data to assist in the optimization of sampling point locations and for health and safety support. Data can be generated regarding the presence or absence of certain contaminants (especially volatiles) at sampling locations.
- **Level II -** Field analysis. This level is characterized by the use of portable analytical instruments, which can be used on site or in mobile laboratories stationed near a site (close-support labs). Depending upon the types of contaminants, sample matrix, and personnel skills, qualitative and quantitative data can be obtained.
- **Level III -** Laboratory analysis using methods other than the Contract Laboratory Program (CLP) Routine Analytical Services (RAS). This level is used primarily in support of engineering studies using standard EPA-approved procedures. Some procedures may be equivalent to CLP RAS, without the CLP requirements for documentation.
- **Level IV -** CLP Routine Analytical Services. This level is characterized by rigorous QC protocols and documentation and provides qualitative and quantitative analytical data. Some regions have obtained similar support via their own regional laboratories, university laboratories, or other commercial laboratories.
- **Level V -** Non-standard methods. Analyses, which may require method modification and/or development. CLP Special Analytical Services (SAS) are considered Level V.

Unless stated otherwise, all data will be generated in accordance with Level IV. When CLP methodology is not available, federal and state approved methods will be utilized. Level III will be utilized, as necessary, for non-CLP RAS work which may include ignitability, corrosivity, reactivity, EP toxicity, and other state approved parameters for characterization. Level I will be used throughout the RI for health and safety monitoring activities.

All measurements will be made to provide that analytical results are representative of the media and conditions measured. Unless otherwise specified, all data will be calculated and reported in units consistent with other organizations reporting similar data to allow comparability of data bases among organizations. Data will be reported in µg/L and mg/L for aqueous samples, and µg/kg and mg/kg (dry weight) for soils, or otherwise as applicable.

The characteristics of major importance for the assessment of generated data are accuracy, precision, completeness, representativeness, and comparability. Application of these characteristics to specific projects is addressed later in this document. The characteristics are defined below.

2.1. Accuracy

Accuracy is the degree of agreement of a measurement or average of measurements with an accepted reference or "true" value and is a measure of bias in the system.

2.2. Precision

Precision is the degree of mutual agreement among individual measurements of a given parameter.

2.3. Completeness

Completeness is a measure of the amount of valid data obtained from a measurement system compared to the amount expected to be obtained under correct normal conditions.

2.4. Representativeness

Representativeness expresses the degree to which data accurately and precisely represents a characteristic of a population, parameter variations at a sampling point, a process condition, or an environmental condition

Careful choice and use of appropriate methods in the field will ensure that samples are representative. This is relatively easy with water or air samples since these components are homogeneously dispersed. In soil and sediment, contaminants are unlikely to be evenly distributed, and thus it is important for the sampler and analyst to exercise good judgment when removing a sample.

2.5. Comparability

Comparability expresses the confidence with which one data set can be compared to another. The data sets may be inter- or intra- laboratory.

3.0 Measurement of Data Quality

3.1. Accuracy

Accuracy of a particular analysis is measured by assessing its performance with "known" samples. These "knowns" take the form of EPA standard reference materials, or laboratory prepared solutions of target analytes spiked into a pure water or sample matrix. In the case of GC or GC/MS analyses, solutions of surrogate compounds, which can be spiked into every sample and are designed to mimic the behavior of target analytes without interfering with their determination, are used.

In each case the recovery of the analyte is measured as a percentage, correcting for analytes known to be present in the original sample if necessary, as in the case of a matrix spike analysis. For EPA supplied known solutions, this recovery is compared to the published data that accompany the solution.

For the firm's prepared solutions, the recovery is compared to EPA-developed data or the firm's historical data as available. For surrogate compounds, recoveries are compared to EPA CLP acceptable recovery tables.

If recoveries do not meet required criteria, then the analytical data for the batch (or, in the case of surrogate compounds, for the individual sample) are considered potentially inaccurate. The analyst or his supervisor must initiate an investigation of the cause of the problem and take corrective action. This can include recalibration of the instrument, reanalysis of the QC sample, reanalysis of the samples in the batch, or flagging the data as suspect if the problems cannot be resolved. For highly contaminated samples, recovery of the matrix spike may depend on sample homogeneity. As a rule, analyses are not corrected for recovery of matrix spike or surrogate compounds.

3.2. Precision

Precision of a particular analysis is measured by assessing its performance with duplicate or replicate samples. Duplicate samples are pairs of samples taken in the field and transported to the laboratory as distinct samples. Their identity as duplicates is sometimes not known to ASC and usually not known to bench analysts, so their usefulness for monitoring analytical precision at bench level is limited. For most purposes, precision is determined by the analysis of replicate pairs (i.e., two samples prepared at the laboratory from one original sample). Often in replicate analysis the sample chosen for replication does not contain target analytes so that quantitation of precision is impossible. For EPA CLP analyses, replicate pairs of spiked samples, known as matrix spike/matrix spike duplicate samples, are used for precision studies. This has the advantage that two real positive values for a target analyte can be compared.

Precision is calculated in terms of Relative Percent Difference (RPD).

- Where X_1 and X_2 represent the individual values found for the target analyte in the two replicate analyses or in the matrix spike/matrix spike duplicate analyses.
- RPDs must be compared to the method RPD for the analysis. The analyst or his supervisor must investigate the cause of RPDs outside stated acceptance limits. This may include a visual inspection of the sample for non homogeneity, analysis of check samples, etc. Follow-up action may include sample reanalysis or flagging of the data as suspect if problems cannot be resolved.
- During the data review and validation process (see Section 9), field duplicate RPDs are assessed as a measure of the total variability of both field sampling and laboratory analysis.

3.3. Completeness

Completeness for each parameter is calculated as follows:

- The firm's target value for completeness for all parameters is 100%. A completeness value of 95% will be considered acceptable. Incomplete results will be reported to the site managers. In planning the field sample collection, the site manager will plan to collect field duplicates from identified critical areas. This procedure should assure 100% completeness for these areas.

3.4. Representativeness

The characteristic of representativeness is not quantifiable. Subjective factors to be taken into account are as follows:

- The degree of homogeneity of a site;
- The degree of homogeneity of a sample taken from one point in a site; and
- The available information on which a sampling plan is based.

To maximize representativeness of results, sampling techniques and sample locations will be carefully chosen so that they provide laboratory samples representative of the site and the specific area. Within the laboratory, precautions are taken to extract from the sample bottle an aliquot representative of the whole sample. This includes premixing the sample and discarding pebbles from soil samples.

4. QC Targets

Target values for detection limit, percent spike recovery and percent "true" value of known check standards, and RPD of duplicates/replicates are included in the QCP, Analytical Procedures. Note that tabulated values are not always attainable. Instances may arise where high sample concentrations, non homogeneity of samples, or matrix interferences preclude achievement of target detection limits or other quality control criteria. In such instances, the firm will report reasons for deviations from these detection limits or noncompliance with quality control criteria.

5. Sampling Procedures

This section describes the sampling procedures to be utilized for each environmental medium that will be collected and analyzed in accordance with appropriate state and federal requirements. All procedures described are consistent with EPA sampling procedures as described in SW-846, third edition, September 1986. All samples will be delivered to the laboratory within 24 to 28 hours of collection.

6. Soil & Groundwater Investigation

The groundwater sampling plan outlined in this subsection has been prepared in general accordance with RCRA Groundwater Monitoring Technical Enforcement Guidance Document 9950.1 (September 1986), Office of Solid Waste and Emergency Response.

Prior to drilling, all drill sites will be cleared with appropriate utility companies to avoid potential accidents relating to underground utilities.

6.1. Test Borings and Well Installation

6.1.1. Drilling Equipment

Direct Push Geoprobe® Soil Borings:

Borings will be advanced with a Geoprobe® direct push sampling system. The use of direct push technology allows for rapid sampling, observation, and characterization of relatively shallow overburden soils. The Geoprobe® utilizes a four-foot macro-core sampler, with disposable polyethylene sleeves. Soil cores will be retrieved in four-foot sections, and can be easily cut from the polyethylene sleeves for observation and sampling. The macro-core sampler will be decontaminated between samples and borings using an alconox and water solution.

6.1.2. Drilling Techniques

Direct Push Geoprobe® Advanced Borings:

Prior to initiating drilling activities, the Geoprobe®, macro cores, drive rods, pertinent equipment, well pipe and screens will be steam cleaned or washed with an alconox and water solution followed by a clean water rinse. This cleaning procedure will also be used between each boring. Throughout and after the cleaning processes, direct contact between the equipment and the ground surface will be avoided. Plastic sheeting and/or clean support structures (e.g., pallets, sawhorses) will be used to create a designated decontamination area. The drilling rig and all equipment will be steam cleaned upon completion of the investigation and prior to leaving the site.

Test borings will be advanced with 2-inch direct push macro-cores through overburden soils. Drilling fluids, other than water from a NYSDEC-approved source, will not be allowed without special consideration and agreement from NYSDEC. The use of lubricants is also not allowed unless approved by the NYSDEC representative.

It will be the responsibility of the consultant to arrange for the appropriate drilling equipment to be present at the site. Standby time to arrange for additional equipment or a water supply will not be allowed unless caused by unexpected site conditions.

During the drilling, a Photoionization detector (PID) will be used to monitor the gases exiting the hole. Macro-core cuttings will be contained if the PID meter readings are greater than 5 ppm above background or the cuttings show visible evidence of contamination, or as specified in the RI Work Plan.

6.1.3. Well Casing (Riser)

Direct Push Geoprobe® Groundwater Monitoring Wells:

Direct Push Geoprobe® advanced groundwater-monitoring wells will use 2.25-inch threaded flush joint PVC pipe.

6.1.4. Well Screen

Direct Push Geoprobe® Groundwater Monitoring Wells:

Direct Push Geoprobe® advanced groundwater-monitoring wells utilized 2.25-inch diameter well screen. Groundwater-monitoring wells will be set to intersect the top of the shallow overburden groundwater table. Each Geoprobe® advanced well will be equipped with 5 to 10 feet (based on anticipated groundwater level) of 0.020 inch slotted PVC screen connected to an appropriate length of PVC riser to complete the well installation.

6.1.5. Artificial Sand Pack

Granular backfill will be chemically and texturally clean (as determined using a 10x hand lens), inert, siliceous, and of appropriate grain size for the screen slot size and the host environment. Sand pack grain size will be selected based on sieve analyses of formation samples. The sand pack will be installed using a tremie pipe and the casing will be equipped with centralizers (wells 16 ft. or deeper only) to minimize the tendency for particle separation and bridging. Prior to casing and screen insertion, a minimum of 6-in of gravel-pack bedding will be placed in the bottom of the hole. The well screen and casing will be installed, and the sand pack placed around the screen and casing to a depth extending at least 25 percent of the screen length above the top of the screen, where possible.

6.1.6. Bentonite Seal

A minimum 2-foot thick seal of tamped bentonite pellets will be placed directly on top of the sand pack, and care will be taken to avoid bridging. The seal will be measured immediately after placement, without allowance for swelling. In the event that the bentonite seal cannot be 2-ft. thick due to a shallow water table, a seal at least 1-ft. thick will be set.

6.1.7. Grout Mixture

Upon completion of the bentonite seal, the well will be grouted with a non-shrinking cement grout (e.g., Volclay^{R}) mix to be placed from the top of the bentonite seal to the ground surface. The cement grout shall consist of a mixture of Portland cement (ASTM C 150) and water, in the proportion of not more than 7 gallons of clean water per bag of cement (1 cubic foot or 94 pounds). Additionally, 3% by weight of bentonite powder shall be added, if permitted.

6.1.8 Surface Protection

At all times during the progress of the work, precautions shall be used to prevent tampering with or the entrance of foreign material into the well. Upon completion of the well, a suitable lockable cap shall be installed to prevent material from entering the well. The PVC well riser shall be protected by a flush mounted road box set into a concrete pad. A concrete pad, sloped away from the well, shall be constructed around the flush mount road box at ground level.

Any well that is to be temporarily removed from service or left incomplete due to delay in construction shall be capped with a watertight cap and equipped with a "vandal-proof" cover, satisfying applicable NYSDEC regulations or recommendations.

6.1.9. Surveying

Coordinates and elevations will be established for each monitoring well and sampling location. Elevations to the closest 0.01 foot shall be used for the survey. These elevations shall be referenced to a regional, local, or project-specific datum. USGS benchmarks will be used whenever available. The location, identification, coordinates, and elevations of the wells will be plotted on maps with a scale large enough to show their location with reference to other structures at each site.

6.1.10. Well Development

After completion of the well, but not sooner than 24 hours after grouting is completed, development will be accomplished using pumping, bailing, or surge blocking. No dispersing agents, acids, disinfectants, or other additives will be used during development or introduced into the well at any other time. During development, water will be removed throughout the entire water column by periodically lowering and raising the pump intake (or bailer stopping point).

Well development will include washing the entire well cap and the interior of the well casing above the water table, using only water from the well itself. As a result of this operation, the well casing will be free of extraneous materials (grout, bentonite, and sand) inside the riser, well cap, and blank casing between top of the well casing and water table. This washing will be conducted before and/or during development; not after development. Development water will be either properly contained and treated as waste until the results of chemical analysis of samples are obtained or discharged on site as determined by the site-specific work plans and/or consultation with the NYSDEC representatives on site.

Development will be completed by removing the approximate volume of water introduced during drilling (if any) and an additional five (5) well volumes. Well development will be performed using dedicated bailers and/or pumping equipment (depending on volumes), and will continue until groundwater turbidity reaches 50 National Turbidity Units (NTUs), or lower. In the event that 50 NTUs is not reached after removing a reasonable number of well volumes (10), the NYSDEC will be contacted to request ceasing development. If dedicated equipment is not used, then the equipment will be decontaminated between each well (alconox wash with potable water rinse). If the NYSDEC Project Manager agrees that removal of this volume of water is impractical, then LaBella will work with NYSDEC to develop an alternate well development protocol.

7. Geologic Logging and Sampling

At each soil boring location, the boring will be advanced through overburden using either a drill rig and hollow-stem auger or direct push technology; soils will be visually inspected for stains and monitored with a PID to help determine potential for vertical migration of contaminants. Soil samples will be collected continuously in both the unsaturated soil zone and the saturated zone. Selected wells will be sampled continuously over the entire depth of the well. The sampling device will be decontaminated according to procedures outlined in the Decontamination section of this document. Soil samples will be screened in the field for volatile organic vapors using a PID, classified in accordance with Unified Soil Classification System (USCS) specifications, and logged. Samples will be stored in glass jars until they are needed for testing or the project is complete.

Hydrogeologic suitability for well emplacement will be determined by the supervising geologist in consultation with NYSDEC, based on thickness and estimated hydraulic conductivity of the saturated zone encountered. If necessary, the borehole will be advanced to water or abandoned.

8. Hydraulic Conductivity Testing Procedures

If necessary, single-well, rising head tests will be performed in order to determine the in-place hydraulic conductivity of unconsolidated and/or consolidated geologic materials, which occur in the monitoring interval of newly installed wells. The tests will be performed by a qualified hydrogeologist. These tests involve lowering the water level in the well and measuring the change in head with respect to time as the well is allowed to recover. In wells which are slow to recover, the water level will be bailed down as described below. The measurements in these wells will be taken manually. Wells which recover too quickly for this method will be tested by removing one bailer of water and the recovery measured by means of a pressure transducer system.

The rising head tests for wells with rapid recovery rates will be conducted as follows:

- The static water level in the well to be tested is measured and recorded;
- A pressure transducer is placed in the well to a minimum depth of three feet below the static water level;
- Readings are made using the data logger until three consecutive readings are the same (equilibrium conditions);
- The data logger is then calibrated to read 0.00 feet at static conditions. A pre-cleaned bailer is then lowered into the well and placed just below the water surface.
- Water level measurements are made until the water level returns to static conditions following introduction of the bailer. If static conditions are not reached within 15 minutes following introduction of the bailer, the well will be tested using the procedures described below for slow recovery wells;
- Once static conditions are reestablished, the bailer is rapidly removed from the water column thereby creating an instantaneous decline of the water level in the well. Coincident with the withdrawal of the bailer, automatic logging of the water levels is initiated using the data logger. The primary goal in the recovery test is to "instantaneously" remove a volume of water that will result in a measurable head decline, the recovery of which (to static conditions) can be monitored over time. Such an instantaneous withdrawal results in recovery due to contributions of flow from the surrounding formation. This flow is controlled by its hydraulic conductivity and not by other factors such as storage effects;

- The water level measurements will continue until water levels recover to within a minimum of 10 percent of the original static water level (90 percent recovery), or an elapsed time of one hour. If the well has not recovered to static conditions after one hour at the discretion of the hydrogeologist, the transducer will be removed and the well will be tested at a later date using the procedures described below for slow recovery wells.
- Data stored in the data loggers will be "dumped" to a hard copy printout using a field printer or to a magnetic disk using a portable computer. If field printouts are used, they will be dated and signed by the hydrogeologist.

For wells with slow recovery rates, the following procedures will be used:

- The static water level is measured and recorded;
- The well is bailed by hand until the depth to water appears to stabilize based on the depth of travel of the bailer rope or to the top of the open or screened interval in wells which are screened below the standing water level;
- The bailer is then removed and water level measurements are collected by hand (measuring tape or electronic water level indicator) at a frequency, which will provide approximately 15 to 20 data, points during recovery (to within 10 percent of the total drawdown), if feasible. Water level measurements are recorded on the hydraulic conductivity testing report.
- A pre-cleaned bailer (one for each well) will be used in the rising head testing. All equipment entering the well, such as the transducer and transducer cable, will be cleaned prior to reuse in accordance with the Decontamination section below. All well water and rinse water generated by the tests will be collected in appropriate containers and disposed of in accordance with the Investigation Derived Materials section below.
- The data from both types of rising head tests will be reduces and evaluated.
- The following equation will be used to calculate the in-situ hydraulic conductivity of the formation opposite the interval of the piezometer (Hvorslev, 1951).

$$k = d^2 \ln \frac{\left[\frac{2mL}{D}\right]}{8L(t_2 - t_1)} \ln \frac{H_1}{H_2}$$

Where:

K = hydraulic conductivity (ft./min.)
d = casing diameter (ft.)
L = intake length (ft.)
D = intake diameter (ft.)
t_1 = time 1 from semilog graph (min.)
t_2 = time 2 from semilog graph (min.)
H_1 = residual head (ft.) corresponding to t_1
H_2 = residual head (ft.) corresponding to t_2
m = square root of the ratio of horizontal to vertical permeability (an estimated value)

9. Groundwater Sampling Procedures

The groundwater in all new monitoring wells will be allowed to stabilize for 7 days following development. Water levels will be measured to within 0.01 foot prior to purging and sampling. Sampling of each well will be accomplished in one of two ways.

Active Sampling:

Low flow sampling of the monitoring wells will occur in order to minimize groundwater drawdown and to obtain a representative sample of groundwater conditions. In order to accomplish this task, the following steps will be taken:

1. Low flow purging of the monitoring wells will include collection of water quality indicator parameters. Water quality indicator parameters will be recorded at five (5)-minute intervals during the purging of the well. These water quality indicator parameters will include:

- Water Level Drawdown
- Temperature
- pH
- Dissolved Oxygen
- Specific Conductance
- Oxidation Reduction Potential
- Turbidity

2. Groundwater sampling will commence once the groundwater quality indicator parameters have stabilized for at least three (3) consecutive readings for the following parameters:

- Water Level Drawdown < 0.3'
- Temperature - + /- 3%
- pH - + /- 0.1unit
- Dissolved Oxygen - + /-10%
- Specific Conductance - + /-3%
- Oxidation Reduction Potential - + /-10 millivolts
- Turbidity - + /-10% for values greater than 1 NTU

4. Each monitoring well will be sampled as indicated at the beginning of this Section. In the event that recoverable groundwater will not be adequate for all testing parameters for wells where the full suite of parameters are to be analyzed for, samples will be collected based on the following hierarchy – 1) VOCs, 2) SVOCs, 3) Metals, 4) PCBs, 5) Pesticides.

Passive Sampling:

Groundwater samples that are collected via passive methods (i.e., no-purge) will be collected according to the following procedures and in the volumes specified in Table 11-1:

- Samples will be collected via passive diffusion bag (PDB) samplers. PDB samplers are made of low-density polyethylene plastic tubing (typically 4 mil), filled with laboratory grade (ASTM Type II) deionized water and sealed at both ends.
- PDB samplers will only be used to collect groundwater samples which will be analyzed for VOCs and in general only for chlorinated VOCs.
- PDB samplers will be deployed by hanging in the well at the middle of the well screen unless a low water table, need to deploy multiple samplers or the targeting of a specific depth interval is identified. The PDB samplers will be deployed at least 14 days prior to sampling.

- The PDB samplers will be deployed using a Teflon® coated string or synthetic rope.
- When transferring water from the PDB to sample containers, care will be taken to avoid agitating the sample, since agitation promotes the loss of volatile constituents;
- Any observable physical characteristics of the groundwater (e.g., color, sheen, odor, turbidity) at the time of sampling will be recorded; and
- Weather conditions (i.e., air temperature, sky condition, recent heavy rainfall, drought conditions) at the time of sampling will be recorded.

10. Geotechnical Sampling

If necessary, a grain size analysis will be conducted by sieving for two non-cohesive units, and Atterberg limits for one cohesive unit, (ASTM methods D 4318-84 and D 422-63, respectively) in each borehole. Grain size analysis by hydrometer will be performed on soils where 20 percent of the sample is less than No. 200 sieve size (i.e., silt or clay). Site-specific work plans indicate specific sampling requirements for physical or geotechnical testing.

Remolded permeability samples will be analyzed in accordance with ASTM D-5084.

11. Management of Investigative-Derived Waste

Purpose:

The purposes of these guidelines are to ensure the proper holding, storage, transportation, and disposal of materials that may contain hazardous wastes. Investigation-derived waste (IDW) included the following:

- Drill cuttings, discarded soil samples, drilling mud solids, and used sample containers;
- Well development and purge waters and discarded groundwater samples;
- Decontamination waters and associated solids;
- Soiled disposable personal protective equipment (PPE);
- Used disposable sampling equipment;
- Used plastic sheeting and aluminum foil;
- Other equipment or materials that either contain or have been in contact with potentially-impacted environmental media.
- Because these materials may contain regulated chemical constituents, they must be managed as a solid waste. This management may be terminated id characterization analytical results indicate the absence of these constituents.

Procedure:

1. Contain all investigation-derived wastes in Department of Transpiration (DOT)-approved 55-gallon drums, roll-off boxes, or other containers suitable for the wastes.
2. Contain wastes from separate borings or wells in separate containers (i.e. do not combine wastes from several borings/wells in a single container, unless it is a container used specifically for transfer purposes, or unless specific permission to do so has been provided by the LaBella Project Manager. Unused samples from surface sample locations within a given area may be combined.
3. To the extent practicable, separate solids from drilling muds, decontamination waters, and

similar liquids. Place solids within separate containers.

4. Transfer all waste containers to a staging area. Access to this area will be controlled. Waste containers must be transferred to the staging area as soon as practicable after the generating activity is complete.
5. Pending transfer, all containers will be covered and secured when not immediately attended,
6. Label all containers with regard to contents, origin, and date of generation. Use indelible ink for all labeling.
7. Collect samples for waste characterization purposes, use boring/well sample analytical data for characterization.
8. For wastes determined to be hazardous in character, be aware on accumulation time limitations. Coordinate the disposal of these wastes with the Owner and NYSDEC.
9. Dispose of investigation-derived wastes as follows;

    - Soil, water, and other environmental media for which analysis does not detect organic constituents, and for which inorganic constituents are at levels consistent with background, may be spread on-site or otherwise treated as a non0-waste material.
    - Soils, water, and other environmental media in which organic compounds are detected or metals are present above background will be disposed as industrial waste. Alternate disposition must be consistent with applicable State and Federal laws.

    - Personal protective equipment, disposable bailers, and similar equipment may be disposed as municipal waste, unless waste characterization results mandate disposal as industrial wastes

12. Decontamination

Sampling methods and equipment have been chosen to minimize decontamination requirements and to prevent the possibility of cross-contamination. Decontamination of equipment will be performed between discrete sampling locations. Equipment used to collect composite samples will not require decontamination between sub-sample collection; however decontamination of equipment will be performed between separate composite samples. All drilling equipment will be decontaminated prior to drilling, after drilling each monitoring well, and after the completion of all drilling. Special attention will be given to the drilling assembly, augers, and PVC casing and screens.

Drilling decontamination will consist of:

- Steam cleaning;
- Scrubbing with brushes, if soil remains on equipment; and
- Steam rinse.

Split spoons and other non-disposable equipment will be decontaminated between each sampling event. The sampler will be cleaned prior to each use, by one of the following procedures:

- Initially cleaned of all foreign matter;
- Sanitized with a steam cleaner;

OR

- Initially cleaned of all foreign matter;
- Scrubbed with brushes in trisodium phosphate or alconox solution;
- Rinsed with deionized water;
- Rinsed with pesticide grade methanol;
- Triple rinsed with deionized water; and
- Allowed to air dry.

13. Sample Containers

The volumes and containers required for the sampling activities are included in pre-washed sample containers will be ordered directly from a firm, which prepares the containers in accordance with EPA bottle washing procedures.

Table 1
Water Samples

Type of Analysis	Type and Size of Container	Number of Containers and Sample Volume (per sample)	Preservation	Maximum Holding Time
Volatile Organics	40-ml glass vial with Teflon-backed septum	Two (2); fill completely, no air space	Cool to 4° C (ice in cooler), Hydrochloric acid to pH <2	7 days

Semivolatile Organics	1,000-ml amber glass jar	One (1); fill completely	Cool to 4° C (ice in cooler)	7/40 days
Pesticides	1,000-ml amber glass jar	One (1); fill completely	Cool to 4° C (ice in cooler)	7/40 days
PCBs	1,000-ml amber glass jar	One (1); fill completely	Cool to 4° C (ice in cooler)	7/40 days
Metals	500-ml polyethylene	One (1); fill completely	Cool to 4° C (Nitric acid to pH <2	6 months

* Holding time is based on verified time of sample receipt at laboratory.

Note: All sample bottles will be prepared in accordance with USEPA bottle washing procedures. These procedures are incorporated in LaBella Associates Quality Control Procedures Manual, January, 1992

TABLE 2
Soil Samples

Type of Analysis	Type and Size of Container	Number of Containers and Sample Volume (per sample)	Preservation	Maximum Holding Time
Volatile Organics, Semivolatile Organics, PCBs, and Pesticides	8-oz, glass jar with Teflon-lined cap	Two (2), fill as completely as possible	Cool to 4° C (ice in cooler)	7 days
RCRA Characterization	8-oz. glass jar with Teflon-lined cap	One (1); fill completely	Cool to 4° C (ice in cooler)	Must be extracted within 10 days; analyzed with 30 days

* Holding time is based on the times from verified time of sample receipt at the laboratory.

Note: All sample bottles will be prepared in accordance with USEPA bottle washing procedures. These procedures are incorporated in LaBella Associates Quality Control Procedures Manual, January, 1992.

TABLE 3
List of Major Instruments for Sampling and Analysis

- MSA 360 0_2 /Explosimeter
- S.E. International Radiation Monitor Model 4C
- Photovac Micro Tip FID or PID
- Organic Vapor Analyzer Foxboro (128)

- Hollige Series 963 Nephlometer (turbidity meter)
- EM-31 Geomics Electromagnetic Induction Device
- pH/Temperature/Conductivity Meter - Portable
- Hewlett Packard (HP) 1000 computer with RTE-6 operating system; and HP 9144 computer with RTE-4 operating system equipped with Aquarius software for control and data acquisition from gas chromatograph/mass spectrometer (GC/MS) systems; combined wiley and National Bureau of Standards (NBS) mass spectral library; and data archiving on magnetic tape
- Viriam 6000 and 37000 gas chromatrographs equipped with flame ionization, electron capture, photoionization and wall detectors as appropriate for various analyses,, and interfaced to Variam DS604 or D5634 data systems for processing data.
- Spectra-Physics Model SP 4100 and SP 4270 and Variam 4270 cam puting integrators
- Perkin Eimer (PE) 3000% and 3030% fully Automated Atomic Absorption Spectrophotometers (AAS) with Furnace Atomizer and background correction system
- PE Plasma II Inductively Coupled Argon Plasma (ICAP) Spectre meter with PE7500 laboratory computer
- Dionex 20001 ion chromatograph with conductivity detector for anion analysis, with integrating recorder

14. Sample Custody

This section describes standard operating procedures for sample identification and chain-of-custody to be utilized for all Phase II field activities. The purpose of these procedures is to ensure that the quality of the samples is maintained during their collection, transportation, and storage through analysis. All chain-of-custody requirements comply with standard operating procedures indicated in EPA sample handling protocol.

Sample identification documents must be carefully prepared so that sample identification and chain-of-custody can be maintained and sample disposition controlled. Sample identification documents include:

- Field notebooks,
- Sample label,
- Custody seals, and
- Chain-of-custody records.

15. Chain-of-Custody

The primary objective of the chain-of-custody procedures is to provide an accurate written or computerized record that can be used to trace the possession and handling of a sample from collection to completion of all required analyses. A sample is in custody if it is:

- In someone's physical possession;
- In someone's view;
- Locked up; or
- Kept in a secured area that is restricted to authorized personnel.

15.1. Field Custody Procedures

- As few persons as possible should handle samples.
- Sample bottles will be obtained precleaned from a source such as I-Chem. Coolers or boxes containing cleaned bottles should be sealed with a custody tape seal during transport to the field or while in storage prior to use.
- The sample collector is personally responsible for the care and custody of samples collected until they are transferred to another person or dispatched properly under chain-of-custody rules.
- The sample collector will record sample data in the notebook.
- The site manager will determine whether proper custody procedures were followed during the fieldwork and decide if additional samples are required.

15.2. Sample Tags

Sample tags attached to or affixed around the sample container must be used to properly identify all samples collected in the field. The sample tags are to be placed on the bottles so as not to obscure any QC lot numbers on the bottles; sample information must be printed in a legible manner using waterproof ink. Field identification must be sufficient to enable cross-reference with the logbook. For chain-of-custody purposes, all QC samples are subject to exactly the same custodial procedures and documentation as "real" samples.

15.3. Transfer of Custody and Shipment

- The coolers in which the samples are packed must be accompanied by a chain-of-custody record. When transferring samples, the individuals relinquishing and receiving them must sign, date, and note the time on the chain-of-custody record. This record documents sample custody transfer
- Shipping containers must be sealed with custody seals for shipment to the laboratory. The method of shipment, name of courier, and other pertinent information are entered in the "Remarks" section of the chain-of-custody record and traffic reports.
- All shipments must be accompanied by the chain-of-custody record identifying their contents. The original record accompanies the shipment. The other copies are distributed appropriately to the site manage.

- If sent by mail, the package is registered with return receipt requested. If sent by common carrier, a bill of lading is used. Freight bills, Postal Service receipts, and bill of lading are retained as part of the permanent documentation.

15.4. Chain-of-Custody Record

The chain-of-custody record must be fully completed in duplicate, using black carbon paper where possible, by the field technician who has been designated by the project manager as responsible for sample shipment to the appropriate laboratory for analysis. In addition, if samples are known to require rapid turnaround in the laboratory because of project time constraints or analytical concerns (e.g., extraction time or sample retention period limitations, etc.), the person completing the chain-of-custody record should note these constraints in the "Remarks" section of the record.

15.5. Laboratory Custody Procedures

A designated sample custodian accepts custody of the shipped samples and verifies that the sample identification number matches that on the chain-of-custody record and traffic reports, if required. Pertinent information as to shipment, pickup, and courier is entered in the "Remarks" section.

15.6. Custody Seals

Custody seals are preprinted adhesive-backed seals with security slots designed to break if the seals are disturbed. Sample shipping containers (coolers, cardboard boxes, etc., as appropriate) are sealed in as many places as necessary to ensure security. Seals must be signed and dated before use. On receipt at the laboratory, the custodian must check (and certify, by completing the package receipt log and LABMIS entries) that seals on boxes and bottles are intact. Strapping tape should be placed over the seals to ensure that seals are not accidentally broken during shipment.

16. Documentation

16.1. Sample Identification

All containers of samples collected from the project will be identified using the following format on a label or tag fixed to the sample container (labels are to be covered with Mylar tape):

XX-YY-O/D

- XX This set of initials indicates the specific Phase II sampling project
- YY These initials identify the sample location. Actual sample locations will be recorded in the task log.
- O/D An "O" designates an original sample; "D" identifies it as a duplicate.

Each sample will be labeled, chemically preserved, if required and sealed immediately after collection. To minimize handling of sample containers, labels will be filled out prior to sample collection. The sample label will be filled out using waterproof ink and will be firmly affixed to the sample containers and protected with Mylar tape. The sample label will give the following information:

- Name of sampler,
- Date and time of collection,
- Sample number,
- Analysis required,
- pH, and
- Preservation.

16.2. Daily Logs

Daily logs and data forms are necessary to provide sufficient data and observations to enable participants to reconstruct event that occurred during the project and to refresh the memory of the field personnel if called upon to give testimony during legal proceedings. All daily logs will be kept in a bound waterproof notebook containing numbered pages. All entries will be made in waterproof ink, dated, and signed. No pages will be removed for any reason. Corrections will be made according to the procedures given at the end of this section. The daily logs will include a site log and task log.

The site log is the responsibility of the site manager and will include a complete summary of the day's activity at the site.

The **Task Log** will include:

- Name of person making entry (signature).
- Names of team members on-site.
- Levels of personnel protection:
  - Level of protection originally used;
  - Changes in protection, if required; and
  - Reasons for changes.
- Time spent collecting samples.
- Documentation on samples taken, including:
  - Sampling location and depth station numbers;
  - Sampling date and time, sampling personnel;
  - Type of sample (grab, composite, etc.); and
  - Sample matrix.
- On-site measurement data.
- Field observations and remarks.
- Weather conditions, wind direction, etc.
- Unusual circumstances or difficulties.
- Initials of person recording the information.

17. Corrections to Documentation

17.1. Notebook

As with any data logbooks, no pages will be removed for any reason. If corrections are necessary, these must be made by drawing a single line through the original entry (so that the original entry can still be read) and writing the corrected entry alongside. The correction must be initialed and dated. Most corrected errors will require a footnote explaining the correction.

17.2. Sampling Forms

As previously stated, all sample identification tags, chain-of-custody records, and other forms must be written in waterproof ink. None of these documents are to be destroyed or thrown away, even if they are illegible or contain inaccuracies that require a replacement document.

If an error is made on a document assigned to one individual, that individual may make corrections simply by crossing a line through the error and entering the corrected information. The incorrect information should not be obliterated. Any subsequent error discovered on a document should be corrected by the person who made the entry. All corrections must be initialed and dated.

17.3. Photographs

Photographs will be taken as directed by the site manager. Documentation of a photograph is crucial to its validity as a representation of an existing situation. The following information will be noted in the task log concerning photographs:

- Date, time, location photograph was taken;
- Photographer (signature);

- Weather conditions;
- Description of photograph taken;
- Reasons why photograph was taken;
- Sequential number of the photograph and the film roll number; and
- Camera lens system used.

After the photographs have been developed, the information recorded in the field notebook should be transferred to the back of the photographs

18. Sample Handling, Packaging, and Shipping

The transportation and handling of samples must be accomplished in a manner that not only protects the integrity of the sample, but also prevents any detrimental effects due to the possible hazardous nature of samples. Regulations for packaging, marking, labeling, and shipping hazardous materials are promulgated by the United States Department of Transportation (DOT) in the Code of Federal Regulation, 49 CFR 171 through 177. All samples will be delivered to the laboratory with 24 to 48 hours from the day of collection.

All chain-of-custody requirements must comply with standard operating procedures in the EPA sample handling protocol. All sample control and chain-of-custody procedures applicable to the Consultant are presented in the Field Personnel Chain-of-Custody Documentation and Quality Control Procedures Manual, January 1992.

18.1. Sample Packaging

Samples must be packaged carefully to avoid breakage or contamination and must be shipped to the laboratory at proper temperatures. The following sample packaging requirements will be followed:

- Sample bottle lids must never be mixed. All sample lids must stay with the original containers.
- The sample volume level can be marked by placing the top of the label at the appropriate sample height, or with a grease pencil. This procedure will help the laboratory to determine if any leakage occurred during shipment. The label should not cover any bottle preparation QC lot numbers.
- All sample bottles are placed in a plastic bag to minimize the potential for vermiculite contamination.
- Shipping coolers must be partially filled with packing materials and ice when required, to prevent the bottles from moving during shipment.
- The sample bottles must be placed in the cooler in such a way as to ensure that they do not touch one another.
- The environmental samples are to be cooled. The use of "blue ice" or some other artificial icing material is preferred. If necessary, ice may be used, provided that it is placed in plastic bags. Ice is not to be used as a substitute for packing materials.
- Any remaining space in the cooler should be filled with inert packing material. Under no circumstances should material such as sawdust, sand, etc., be used.
- A duplicate custody record and traffic reports, if required must be placed in a plastic bag and

taped to the bottom of the cooler lid. Custody seals are affixed to the sample cooler.

18.2. Shipping Containers

Shipping containers are to be custody-sealed for shipment as appropriate. The container custody seal will consist of filament tape wrapped around the package at least twice and custody seals affixed in such a way that access to the container can be gained only by cutting the filament tape and breaking a seal.

Field personnel will make arrangements for transportation of samples to the lab. When custody is relinquished to a shipper, field personnel will telephone the lab custodian to inform him of the expected time of arrival of the sample shipment and to advise him of any time constraints on sample analysis. The lab must be notified as early in the week as possible, and in no case later than 3 p.m. (EST) on Thursday, regarding samples intended for Saturday delivery.

18.3. Marking and Labeling

- Use abbreviations only where specified.
- The words "This End Up" or "This Side Up" must be clearly printed on the top of the outer package. Upward pointing arrows should be placed on the sides of the package. The words "Laboratory Samples" should also be printed on the top of the package.
- After a sample container has been sealed, two chain-of-custody seals are placed on the container, one on the front and one on the back. The seals are protected from accidental damage by placing strapping tape over then.
- If samples are designated as medium or high hazard, they must be sealed in metal paint cans, placed in the cooler with vermiculite and labeled and placarded in accordance with DOT regulations.
- In addition, the coolers must also be labeled and placarded in accordance with DOT regulations if shipping medium and high hazard samples.

19. Calibration Procedures and Frequency

All instruments and equipment used during sampling and analysis will be operated, calibrated, and maintained according to the manufacturer's guidelines and recommendations as well as criteria set forth in the applicable analytical methodology references. Operation, calibration, and maintenance will be performed by personnel properly trained in these procedures. Documentation of all routine and special maintenance and calibration information will be maintained in an appropriate logbook or reference file, and will be available on request. Table 7-1 lists the major instruments to be used for sampling and analysis. Brief descriptions of calibration procedures for major field and laboratory instruments follow.

20. Field Instrumentation

20.1. Photovac Micro Tip Flameionizer (FID)

Standard operating procedures for the FID require that routine maintenance and calibration be performed every six months. Field calibration will be performed on a daily basis. The packages used for calibration are non-toxic analyzed gas mixtures available in pressurized containers.

20.2. Photovac/MiniRea Photoionization Detector (PID)

Standard operating procedures for the PID require that routine maintenance and calibration be performed every six months. Field calibration will be performed on a daily basis. The packages used for calibration are non-toxic analyzed gas mixtures available in pressurized containers.

20.3. Organic Vapor Analyzer

Organic vapor analyzers (OVAs) are calibrated and routine maintenance performed every six months when the units are not in use. Calibration is performed and the major system checks are performed prior to the instrument being released for field use.

Calibration of the OVA 128 GC must be performed by a factory-authorized service representative. The instrument is removed from its protective case and the probe is connected to the base unit. After checking for an airtight seal in the sample line (plugging the sample inlet to stop the pump), the hydrogen supply is turned on and the pressure is set to 10 psi. The electronics are turned on and the instrument is allowed to warm up for at least 5 minutes. After warm up, the instrument is zeroed on the "X10" scale using the adjust knob. The flame is then lit and a gas-tight sample bag is filled with a mixture of 100 ppm methane in air. The sample bag is then attached to the probe inlet and the internal pump is allowed to draw in as much sample as is needed. R32 on the control board is adjusted to read 100 ppm on the "X10" scale and then the hydrogen supply is shut down. The pump can now be turned off and the sample bag removed. Using the adjust knob, the meter is set to read 4 ppm on the "X1" scale. Switching back to the "X10" scale the adjust knob is again used to set the meter to 40 ppm. The scale is then set to "X100" and R33 is adjusted until the meter reads 40 ppm on the "X100" scale.

The OVA has a detection limit of 0.1 ppm in methane equivalents and a working range of 0 to 1,000 ppm. During daily field use, system checks are performed which involve calibration and maintenance of the pump systems, gases, and filters. Care is taken to check for and prevent clogging or leaks. Quad rings and the burner chamber are examined on a weekly basis. Routine biannual maintenance includes a thorough cleaning as well as a re-examination of the pump system for leaks and wear. Parts are replaced as necessary. Instrument operation is verified by calibrating and running the OVA for 4 to 6 hours. An instrument specific logbook is maintained with the OVA to document its use and maintenance.

20.4. Conductance, Temperature, and pH Tester

Temperature and conductance instruments are factory calibrated. Temperature accuracy can be checked against an NBS certified thermometer prior to field use if necessary. Conductance accuracy may be checked with a solution of known conductance and recalibration can be instituted, if necessary.

To recalibrate conductance, remove the black plug revealing the adjustment potentiometer screw. Add standard solution to cup, discard and refill. Repeat procedure until the digital display indicates the same value twice in a row. Adjust the potentiometer until the digital display indicates the known value of conductance. To increase the digital display reading, turn the adjustment potentiometer screw counter-clockwise (clockwise to decrease).

To standardize the pH electrode and meter, place the pH electrode in the 7.0 buffer bottle. Adjust the "ZERO" potentiometer on the face of the tester so that the digital display indicates 7.00.

Then place the pH electrode in the 4.0 or 10.0 buffer bottle (depending on where you expect the actual

measurement to be). Adjust the "SLOPE" potentiometer on the face of the tester so that the digital display indicates the value of the buffer chosen.

Note: There is interaction between the "ZERO" and "SLOPE" adjustments, so the procedure should be repeated several times.

Do not subject the pH electrode to freezing temperatures.

It is good practice to rinse the electrode in distilled water when going from one buffer to another. When not in use the cap should be kept on the electrode. Keeping the cotton in the cap moist will keep the electrode ready to use. Moisten the cotton frequently (once a week, usually).

20.5. 0_2/Explosimeter

The primary maintenance item of the Model 260 is the rechargeable 2.4 volt (V) nickel cadmium battery. The battery is recharged by removing the screw cap covering receptacle and connecting one end of the charging cable to the instrument and the other end to a 115V AC outlet.

The battery can also be recharged using a 12V DC source. An accessory battery charging cable is available, one end of which plugs into the Model 260 while the other end is fitted with an automobile cigarette lighter plug.

Recommended charging time is 16 hours.

Before the calibration of the combustible gas indicator can be checked, the Model 260 must be in operating condition. Calibration check-adjustment is made as follows:

1. Attach the flow control to the recommended calibration gas tank.
2. Connect the adapter-hose to the flow control.
3. Open flow control valve.
4. Connect the adapter-hose fitting to the inlet of the instrument; after about 15 seconds the LEL meter pointer should be stable and within the range specified on the calibration sheet accompanying the calibration equipment. If the meter pointer is not in the correct range, stop the flow; remove the right hand side cover. Turn on the flow and adjust the "S" control with a small screwdriver to obtain a reading as specified on the calibration sheet.
5. Disconnect the adapter-hose fitting from the instrument.
6. Close the flow control valve.
7. Remove the adapter-hose from the flow control.
8. Remove the flow control from the calibration gas tank.
9. Replace the side cover on the Model 260.

CAUTION: Calibration gas tank contents are under pressure. Use no oil, grease, or flammable solvents on the flow control or the calibration gas tank. Do not store calibration gas tank near heat or fire or in rooms used for habitation. Do not throw in fire, incinerate, or puncture. Keep out of reach of children. It is illegal and hazardous to refill this tank. Do not attach the calibration gas tank to any other apparatus

than described above. Do not attach any gas tank other than MSA calibration tanks to the regulator.

20.6. Nephelometer (Turbidity Meter)

The Series 95 nephelometer is calibrated before each use. Allow the instrument to warm up for approximately 2 hours. Using turbidity-free deionized water, zero the meter. Set the scale to 100, fill with a 40 NTU standard (AEPA-1 turbidity standard from Advanced Polymer Systems, Inc.), and insert into the instrument. Adjust the standardize control to give a readout of 200. Re-zero the instrument and repeat these steps with the scale set at 10 and 1 using 4.0 and 0.4 NTU standards, respectively. These standards are prepared by diluting aliquots of the 40 NTU standard.

20.7. S.E. International Radiation Monitor Model 4EC

This radiation monitor detects alpha, beta, gamma, and X-rays. The analog meter is scaled in CPM (counts per minute) or mR/hr (milli-Roentgens per hour), and the X1, X10, X100 switch extends the effective measurement range. This handheld unit is powered by a single 9-volt battery that offers up to 2,000 hours of operation.

21. Internal Quality Control Checks

QC data are necessary to determine precision and accuracy and to demonstrate the absence of interferences and/or contamination of field equipment. Field-based QC will comprise at least 10% of each data set generated and will consist of standards, replicates, spikes, and blanks. Field duplicates and field blanks will be analyzed by the laboratory as samples and will not necessarily be identified to the laboratory as duplicates or blanks. For each matrix, field duplicates will be provided at a rate of one per 10 samples collected or one per shipment, whichever is greater. Field blanks which consist of trip, routine field, and rinsate blanks will be provided at a rate of one per 20 samples collected for each parameter group, or one per shipment, whichever is greater.

Calculations will be performed for recoveries and standard deviations along with review of retention times, response factors, chromatograms, calibration, tuning, and all other QC information generated. All QC data, including split samples, will be documented in the site logbook. QC records will be retained and results reported with sample data.

21.1. Blank Samples

Blank samples are analyzed in order to assess possible contamination from the field and/or laboratory so that corrective measures may be taken, if necessary. Field samples are discussed in the following subsection:

21.2. Field Blanks

Various types of blanks are used to check the cleanliness of field handling methods. The following types of blanks may be used: the trip blank, the routine field blank, and the field equipment blank. They are analyzed in the laboratory as samples, and their purpose is to assess the sampling and transport procedures as possible sources of sample contamination. Field staff may add blanks if field circumstances are such that they consider normal procedures are not sufficient to prevent or control sample contamination, or at the direction of the project manager. Rigorous documentation of all blanks in the site logbooks is mandatory.

- **Routine Field Blanks** or bottle blanks are blank samples prepared in the field to access

ambient field conditions. They will be prepared by filling empty sample containers with deionized water and any necessary preservatives. They will be handled like a sample and shipped to the laboratory for analysis.

- **Trip Blanks** are similar to routine field blanks with the exception that they are **not** exposed to field conditions. Their analytical results give the overall level of contamination from everything except ambient field conditions. For the RI/FS, one trip blank will be collected with every batch of water samples for volatile organic analysis. Each trip blank will be prepared by filling a 40-ml vial with deionized water prior to the sampling trip, transported to the site, handled like a sample, and returned to the laboratory for analysis without being opened in the field.
- **Field Equipment Blanks** are blank samples (sometimes called transfer blanks or rinsate blanks) designed to demonstrate that sampling equipment has been properly prepared and cleaned before field use, and that cleaning procedures between samples are sufficient to minimize cross contamination. If a sampling team is familiar with a particular site, they may be able to predict which areas or samples are likely to have the highest concentration of contaminants. Unless other constraints apply, these samples should be taken last to avoid excessive contamination of sampling equipment.

21.3. Field Duplicates

Field duplicate samples consist of a set of two samples collected independently at a sampling location during a single sampling event. In some instances the field duplicate can be a blind duplicate, i.e., indistinguishable from other analytical samples so that personnel performing the analyses are not able to determine which samples are field duplicates. Field duplicates are designed to assess the consistency of the overall sampling and analytical system.

21.4. Quality Control Check Samples

Inorganic and organic control check samples are available from EPA free of charge and are used as a means of evaluating analytical techniques of the analyst. Control check samples are subjected to the entire sample procedure, including extraction, digestion, etc., as appropriate for the analytical method utilized.

I:\Genesee Valley Real Estate Co\209280\Reports\SMP\Appendix\7 - QAPP

APPENDIX 8

SITE MANAGEMENT FORMS

LABELLA Associates, D.P.C.

300 STATE STREET, SUITE 201
ROCHESTER, NEW YORK 14614
PHONE: (585) 454-6110
FAX: (585-454-3066

MONITORING AND INJECTION WELL INSPECTION FORM

PROJECT NAME: NYSDEC BCP SITE NO. C828159
LOCTION: 690 ST. PAUL STREET, ROCHESTER, NEW YORK
PROJECT NO.: 209280
INSPECTED BY:
DATE:
WEATHER:

WELL ID	EVIDENCE OF DAMAGE	EVIDENCE OF FROST HEAVING	EVIDENCE OF CASING DAMAGE OR WEAR	LOCK IN PLACE	EVIDENCE OF WELL SUBSIDENCE	STANDING OR PONDING WATER	CORRECTIVE ACTION MEASURES TAKEN	COMMENTS
	YES / NO	YES / NO	YES / NO	YES / NO	YES / NO	YES / NO	YES / NO	
	YES / NO	YES / NO	YES / NO	YES / NO	YES / NO	YES / NO	YES / NO	
	YES / NO	YES / NO	YES / NO	YES / NO	YES / NO	YES / NO	YES / NO	
	YES / NO	YES / NO	YES / NO	YES / NO	YES / NO	YES / NO	YES / NO	
	YES / NO	YES / NO	YES / NO	YES / NO	YES / NO	YES / NO	YES / NO	
	YES / NO	YES / NO	YES / NO	YES / NO	YES / NO	YES / NO	YES / NO	
	YES / NO	YES / NO	YES / NO	YES / NO	YES / NO	YES / NO	YES / NO	
	YES / NO	YES / NO	YES / NO	YES / NO	YES / NO	YES / NO	YES / NO	
	YES / NO	YES / NO	YES / NO	YES / NO	YES / NO	YES / NO	YES / NO	
	YES / NO	YES / NO	YES / NO	YES / NO	YES / NO	YES / NO	YES / NO	

LABELLA Associates, D.P.C.
300 STATE STREET, SUITE 201
ROCHESTER, NEW YORK 14614
PHONE: (585) 454-6110
FAX: (585-454-3066

SOIL COVER SYSTEM (OR CAP) INSPECTION FORM

PROJECT NAME: NYSDEC BCP SITE NO. C828159
LOCTION: 690 ST. PAUL STREET, ROCHESTER, NEW YORK
PROJECT NO.: 209280
INSPECTED BY:
DATE:
WEATHER:

COVER TYPE	OVERALL CONDITION	ANY LOCATIONS REQUIRE REPAIR OR MAINTENANCE	PHOTOS TAKEN	COMMENTS
SOIL COVER		YES / NO	YES / NO	
ASPHALT SURFACE		YES / NO	YES / NO	
CONCRETE SURFACE		YES / NO	YES / NO	
BUILDING SLAB		YES / NO	YES / NO	
AOC #6D SOIL CAP		YES / NO	YES / NO	

As part of the AOC 6D soil cap evaluation, verify that a robust grass cover is maintained and note any signs of settling, erosion, or any other signs that could indicate the cover thickness is less than 2 feet.

LABELLA Associates, D.P.C.

300 STATE STREET, SUITE 201
ROCHESTER, NEW YORK 14614
PHONE: (585) 454-6110
FAX: (585-454-3066

LNAPL INSPECTION FORM

PROJECT NAME: NYSDEC BCP SITE NO. C828159
LOCTION: 690 ST. PAUL STREET, ROCHESTER, NEW YORK
PROJECT NO.: 209280
INSPECTED BY:
DATE:
WEATHER:

INSPECTION EVENT		WELL ID	DEVICE USED TO MEASURE LNAPL	LNAPL OBSERVED	ESTIMATED THICKNESS OF LNAPL LAYER [INCHES]	ABSORBENT SOCK INSTALLED	COMMENTS
SEMI-ANNUAL	ANNUAL						
		BW-1	BAILER / OIL-WATER PROBE	YES / NO		YES / NO	
		RW-EAST	BAILER / OIL-WATER PROBE	YES / NO		YES / NO	
		RW-WEST	BAILER / OIL-WATER PROBE	YES / NO		YES / NO	
		REC-B-EAST	BAILER / OIL-WATER PROBE	YES / NO		YES / NO	
		REC-B-WEST	BAILER / OIL-WATER PROBE	YES / NO		YES / NO	
		BW-14	BAILER / OIL-WATER PROBE	YES / NO		YES / NO	
		BW-15	BAILER / OIL-WATER PROBE	YES / NO		YES / NO	

LABELLA Associates, D.P.C.

300 STATE STREET, SUITE 201
ROCHESTER, NEW YORK 14614
PHONE: (585) 454-6110
FAX: (585-454-3066

SUB SLAB DEPRESSURIZATION SYSTEM INSPECTION FORM

PROJECT NAME: NYSDEC BCP SITE NO. C828159
LOCTION: 690 ST. PAUL STREET, ROCHESTER, NEW YORK
PROJECT NO.: 209280
INSPECTED BY:
DATE:
WEATHER:

INSPECTION EVENT		COMPONENT	BUILDING 14B				COMMENTS
QUARTERLY	ANNUALLY		SSDS FAN #1	SSDS FAN #2	SSDS FAN #3	SSDS FAN #4	
		OPERATIONAL	YES / NO	YES / NO	YES / NO	YES / NO	
		VACUUM GAUGE READING (IN. H20)					
		OPEN BALL VALVE ON TRAP/DRAIN WATER	YES / NO	YES / NO	YES / NO	YES / NO	
		ALARM CHECK	YES / NO	YES / NO	YES / NO	YES / NO	
		SSDS PIPING CHECK	YES / NO	YES / NO	YES / NO	YES / NO	
		SSDS FAN CHECK	YES / NO	YES / NO	YES / NO	YES / NO	
		CONDENSATE WATER CHECK	YES / NO	YES / NO	YES / NO	YES / NO	
		INDOOR AIR SAMPLES COLLECTED	YES / NO				

LABELLA Associates, D.P.C. | Engineering Architecture Environmental Planning

SUB-SLAB DEPRESSURIZATION SYSTEM AND GPTS VENT FAN MONTHLY INSPECTION FORM

PROJECT NAME: NYSDEC BCP SITE NO. C828159
LOCATION: 690 ST. PAUL STREET, ROCHESTER, NEW YORK
LABELLA PROJECT # 209280
LABELLA REP:
DATE:
WEATHER:

LOCTION	OPERATIONAL	VACUUM READING (INCHES OF WATER)	ALARM WORKING
SSDS FAN #1 (WEST)	YES / NO		YES / NO
SSDS FAN #2 (EAST)	YES / NO		YES / NO
SSDS FAN #3	YES / NO		YES / NO
SSDS FAN #4	YES / NO		YES / NO
GPTS ROOM VENT FAN	YES / NO		YES / NO

NOTES:
GPTS = GROUNDWATER PUMP AND TREATMENT SYSTEM

LABELLA Associates, D.P.C.

300 STATE STREET, SUITE 201
ROCHESTER, NEW YORK 14614
PHONE: (585) 454-6110
FAX: (585-454-3066

GROUNDWATER PUMP & TREAT SYSTEM INSPECTION FORM

PROJECT NAME: NYSDEC BCP SITE NO. C828159
LOCTION: 690 ST. PAUL STREET, ROCHESTER, NEW YORK
PROJECT NO.: 209280
INSPECTED BY:
DATE:
WEATHER:

INSPECTION EVENT			GP&TS COMPONENT	OBSERVATION	COMMENTS
MONTHLY	QUARTERLY	ANNUALLY			
			IS VENT FAN IN GPTS ROOM OPERATING	YES / NO	
			IS GP&TS OPERATING	YES / NO	
			ARE THERE ANY VISIBLE LEAKS	YES / NO	
			COMPRESSOR FUNCTIONING PROPERLY	YES / NO	
			PIPING, VALVES, FITTINGS INSPECTED	YES / NO	
			TRANSFER PUMPS FUNCTIONING PROPERLY	YES / NO	
			CARBON VESSELS PRESURE BELOW 150 PSIG?	YES / NO	
			CONDITION OF EQUALIZATION TANK	GOOD / POOR	
			RECOVERY PUMPS INSPECTED/FUNCTIONING PROPERLY	YES / NO	
			MCPW SEWER USE PERMIT WATER SAMPLE COLLECTED	YES / NO	
			WATER SAMPLE COLLECTED BETWEEN EACH EXTRACTION WELL AND EQUALIZATION TANK	YES / NO	
			WATER SAMPLE COLLECTED BETWEEN EQUALIZATION TANK AND 1ST CARBON VESSEL	YES / NO	
			WATER SAMPLE COLLECTED AFTER 2ND CARBON VESSEL	YES / NO	

APPENDIX 9

REMEDIAL SITE OPTIMATION REPORT

REMEDIAL SYSTEM OPTIMIZATION FOR **NYSDEC Site Number: C828159**

TABLE OF CONTENTS

1.0 INTRODUCTION
1.1 SITE OVERVIEW
1.2 PROJECT OBJECTIVES AND SCOPE OF WORK
1.3 REPORT OVERVIEW
2.0 REMEDIAL ACTION DESCRIPTION
2.1 SITE LOCATION AND HISTORY
2.2 REGULATORY HISTORY AND REQUIREMENTS
2.3 CLEAN-UP GOALS AND SITE CLOSURE CRITERIA
2.4 PREVIOUS REMEDIAL ACTIONS
2.5 DESCRIPTION OF EXISTING REMEDY
2.5.1 System Goals and Objectives
2.5.2 System Description
2.5.3 Operation and Maintenance Program
3.0 FINDINGS AND OBSERVATIONS
3.1 SUBSURFACE PERFORMANCE
3.2 TREATMENT SYSTEM PERFORMANCE
3.3 REGULATORY COMPLIANCE 3-3
3.4 MAJOR COST COMPONENTS OR PROCESSES
3.5 SAFETY RECORD
4.0 RECOMMENDATIONS
4.1 RECOMMENDATIONS TO ACHIEVE OR ACCELERATE SITE CLOSURE
4.1.1 Source Reduction/Treatment
4.1.2 Sampling
4.1.3 Conceptual Site Model (Risk Assessment)
4.2 RECOMMENDATIONS TO IMPROVE PERFORMANCE
4.2.1 Maintenance Improvements
4.2.2 Monitoring Improvements
4.2.3 Process Modifications

4.3 RECOMMENDATIONS TO REDUCE COSTS
4.3.1 Supply Management
4.3.2 Process Improvements or Changes
4.3.3 Optimize Monitoring Program
4.3.4 Maintenance and Repairs
4.4 RECOMMENDATIONS FOR IMPLEMENTATION